COHEEFT®

AIR DISC BRAKE CALIPER REPAIR KITS

SB5

KNR

SB5 TYPE

Always the Best...

EAC CE UDEM JAS-ANZ ISO 9001 2015

SB5 TYPE

CHEEFT NUMBER	1002

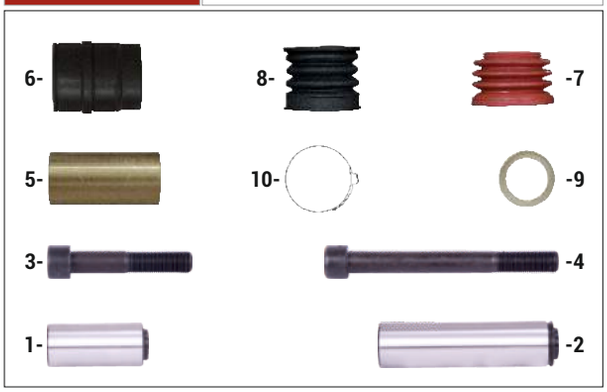

Caliper Guides & Seals Repair Kit

OEM NUMBER	II369100062 - II339680062 - MB 000 420 1282 MN 81.50822.6009 - SCN 1390427 - DF 1142142 1198153 - 1198154 -1448915 - IVECO 93162048 NEOPLAN 11015565

NR	CHEEFT NR	DESCRIPTIONS	DIMENSION	QTY
1	1502	GUIDE PIN	Ø34 x 80 mm	1
2	1507	GUIDE PIN	Ø36 x 145 mm	1
3	1514	BOLT	M16 x 1,5 x 87 mm	1
4	1518	BOLT	M16 x 1,5 x 150 mm	1
5	1521	BRONZE BUSH	Ø40 x Ø36 x 82 mm	1
6	1525	RUBBER BUSH		1
7	1531	INNER BOOT		1
8	1532	OUTER BOOT		1
9	1551	INNER BOOT RING		1
10	1552	OUTER BOOT CLAMP		1

CHEEFT NUMBER	1196

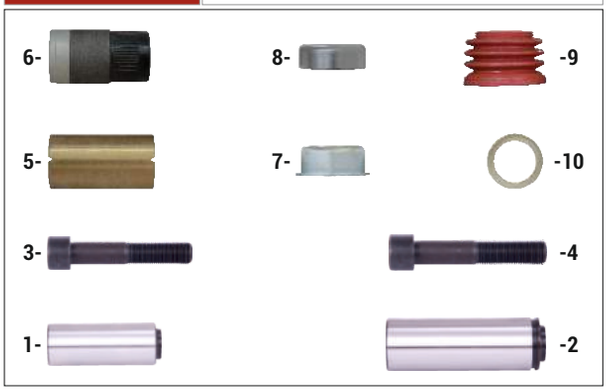

Caliper Guides & Seals Repair Kit

OEM NUMBER	K001274 - K002716

NR	CHEEFT NR	DESCRIPTIONS	DIMENSION	QTY
1	1501	GUIDE PIN	Ø32 x 80 mm	1
2	1519	GUIDE PIN	Ø36 x 103 mm	1
3	1513	BOLT	M16 x 1,5 x 80 mm	1
4	1514	BOLT	M16 x 1,5 x 87 mm	1
5	1621	BRONZE BUSH	Ø40 x Ø36 x 75 mm	1
6	1522	METAL-RUBBER BUSH	Ø39 mm (metal end)	1
7	1542	STEEL CAP	Ø26 x 11,5 mm	1
8	1543	STEEL CAP	Ø40 x 15 mm	1
9	1531	INNER BOOT		1
10	1551	INNER BOOT RING		1

CHEEFT NUMBER	1022

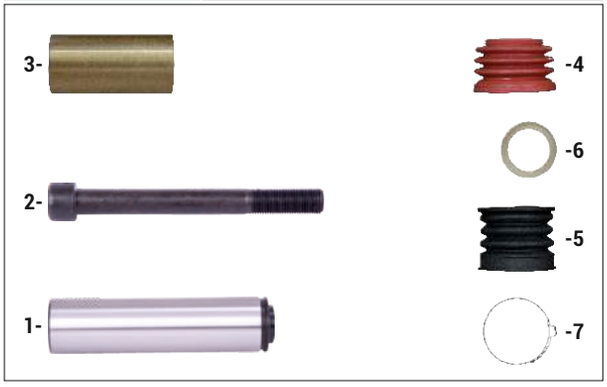

Caliper Guide & Seals Repair Kit

OEM NUMBER	K000935 - SF 3 434 3802 00

NR	CHEEFT NR	DESCRIPTIONS	DIMENSION	QTY
1	1507	GUIDE PIN	Ø36 x 145 mm	1
2	1518	BOLT	M16 x 1,5 x 150 mm	1
3	1521	BRONZE BUSH	Ø40 x Ø36 x 82 mm	1
4	1531	INNER BOOT		1
5	1532	OUTER BOOT		1
6	1551	INNER BOOT RING		1
7	1552	OUTER BOOT CLAMP		1

ORIGINAL PART NUMBERS,MARKS AND MODELS MENTIONED ARE ONLY FOR DESCRIPTION PURPOSES.

SB5 TYPE

CHEEFT NUMBER	1006

Caliper Rubber Bush & Guide Repair Kit

OEM NUMBER	II368470064 - DF 1448910 - SF 3 434 3801 00 SCN 2121840

NR	CHEEFT NR	DESCRIPTIONS	DIMENSION	QTY
1	1502	GUIDE PIN	Ø34 x 80 mm	1
2	1514	BOLT	M16 x 1,5 x 87 mm	1
3	1525	RUBBER BUSH		1

CHEEFT NUMBER	1193

Caliper Guide Repair Kit

OEM NUMBER	K000697

NR	CHEEFT NR	DESCRIPTIONS	DIMENSION	QTY
1	1501	GUIDE PIN	Ø32 x 80 mm	1
2	1522	METAL RUBBER BUSH	Ø39 mm (metal end)	1

CHEEFT NUMBER	1004

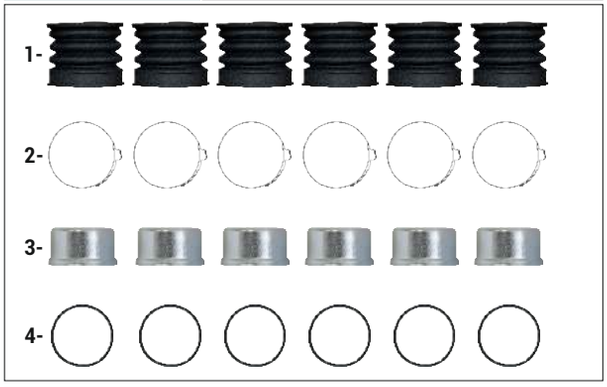

Caliper Outer Boots & Steel Caps

OEM NUMBER	K001301 - MN 81.50822.6025 SCN 1439494 - 2121839

NR	CHEEFT NR	DESCRIPTIONS	DIMENSION	QTY
1	1532	OUTER BOOT		6
2	1552	OUTER BOOT CLAMP		6
3	1541	STEEL CAP	Ø50 x 28 mm	6
4	1553	O-RING		6

ORIGINAL PART NUMBERS,MARKS AND MODELS MENTIONED ARE ONLY FOR DESCRIPTION PURPOSES.

SB5 TYPE

CHEEFT NUMBER	1197

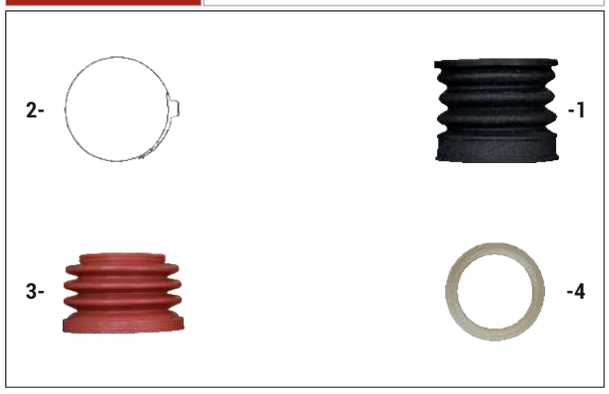

Caliper Boots Repair Kit

OEM NUMBER	II350470061 - MB 001 420 6683 MN 81.50822.6005

NR	CHEEFT NR	DESCRIPTIONS	DIMENSION	QTY
1	1532	OUTER BOOT		1
2	1552	OUTER BOOT CLAMP		1
3	1531	INNER BOOT		1
4	1551	INNER BOOT RING		1

CHEEFT NUMBER	1015

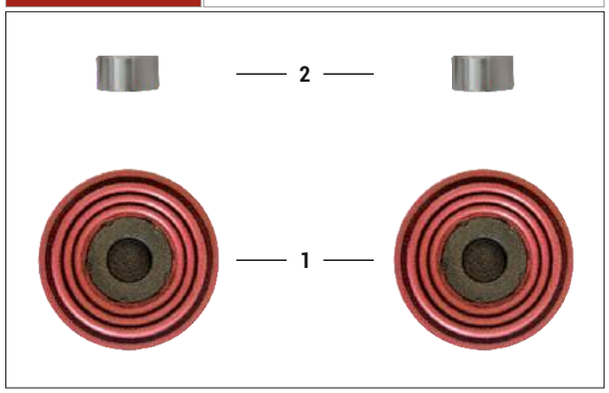

Caliper Piston Tappet Repair Kit

OEM NUMBER	II179320065 - II304130065 - SCN 1390429

NR	CHEEFT NR	DESCRIPTIONS	DIMENSION	QTY
1	1533	TAPPET & BOOT ASSEMBLY	Ø74 mm	2
2	1520	TAPPET BUSH	Ø18 x Ø16 x 10 mm	2

CHEEFT NUMBER	1016

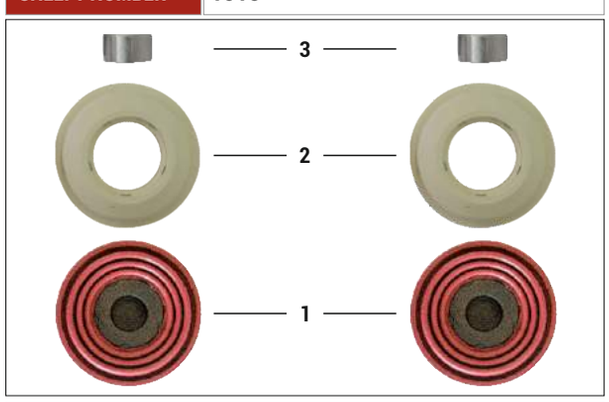

Caliper Piston Tappet & Seals Repair Kit

OEM NUMBER	K000944 - K010604 - MB 000 420 0682 - 000 420 3982 - 000 420 4882 MN 81.50822.6007 - 81.50822.6022 - 81.50822.6032 SCN 1743421 - 1746824 - 1756389 - 1759811 - 1723414 - 2121859 DF 1448913 - 1623221 - IVECO 93162050 - B.V 09.801.02.63.0 SF 3 434 3804 00 - 8 531 7002 800

NR	CHEEFT NR	DESCRIPTIONS	DIMENSION	QTY
1	1533	TAPPET & BOOT ASSEMBLY	Ø74 mm	2
2	1537	INNER SEAL		2
3	1520	TAPPET BUSH	Ø18 x Ø16 x 10 mm	2

ORIGINAL PART NUMBERS,MARKS AND MODELS MENTIONED ARE ONLY FOR DESCRIPTION PURPOSES.

SB5 TYPE

CHEEFT NUMBER	1014

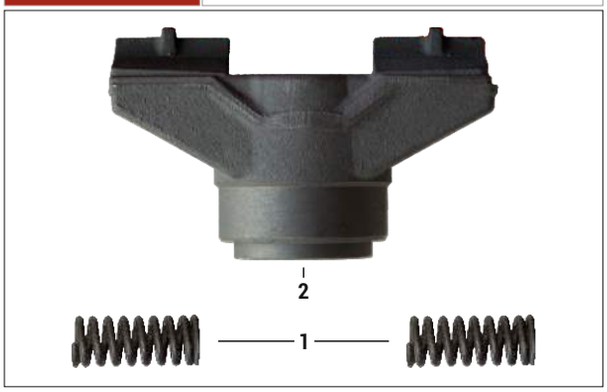

Caliper Bridge Assembly

OEM NUMBER	

NR	CHEEFT NR	DESCRIPTIONS	DIMENSION	QTY
1	1572	SPRING	Ø21 x 51,5 mm	2
2	1594	BRIDGE ASSEMBLY		1

CHEEFT NUMBER	1067

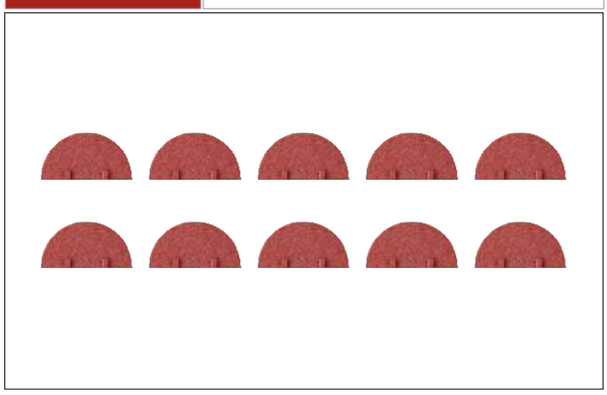

Caliper Support Seal Kit

OEM NUMBER	

NR	CHEEFT NR	DESCRIPTIONS	DIMENSION	QTY
1	1585	SUPPORT SEAL		10

CHEEFT NUMBER	1068

Caliper Plug Kit

OEM NUMBER	

NR	CHEEFT NR	DESCRIPTIONS	DIMENSION	QTY
1	1586	PLUG	Ø 55/50 x 11 mm	5

ORIGINAL PART NUMBERS,MARKS AND MODELS MENTIONED ARE ONLY FOR DESCRIPTION PURPOSES.

SB5 TYPE

CHEEFT NUMBER	1062

Caliper Plastic Cover (Without Sensor)

OEM NUMBER	

NR	CHEEFT NR	DESCRIPTIONS	DIMENSION	QTY
1	1581	PLASTIC COVER (WITH HOLE)		1
2	1582	SENSOR COVER SEAL		1
3	1575	SCREW WITH RIVET		4
4	1558	PLASTIC COVER CAP		1
5	1550	SEAL		1

CHEEFT NUMBER	1063

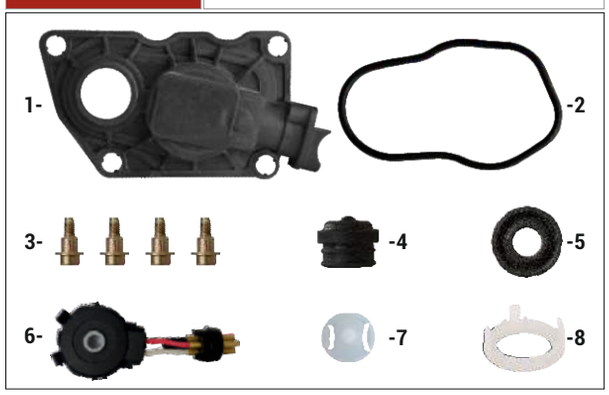

Caliper Plastic Cover (2 Cables Sensor)

OEM NUMBER	

NR	CHEEFT NR	DESCRIPTIONS	DIMENSION	QTY
1	1581	PLASTIC COVER (WITH HOLE)		1
2	1582	SENSOR COVER SEAL		1
3	1575	SCREW WITH RIVET		4
4	1558	PLASTIC COVER CAP		1
5	1550	SEAL		1
6	1547	2 CABLES SENSOR		1
7	1559	SENSOR ADJUSTER PLASTIC	Ø5,3 mm	1
8	1647	SENSOR STABILIZER PLASTIC		1

CHEEFT NUMBER	1076

Caliper Sensor Cover (3 Cables Sensor)

OEM NUMBER	(For 12-160 MN TGL)

NR	CHEEFT NR	DESCRIPTIONS	DIMENSION	QTY
1	1581	PLASTIC COVER (WITH HOLE)		1
2	1582	SENSOR COVER SEAL		1
3	1575	SCREW WITH RIVET		4
4	1558	PLASTIC COVER CAP		1
5	1550	SEAL		1
6	1588	3 CABLES SENSOR	FOR MN	1
7	1559	SENSOR ADJUSTER PLASTIC	Ø5,3 mm	1
8	1647	SENSOR STABILIZER PLASTIC		1

ORIGINAL PART NUMBERS,MARKS AND MODELS MENTIONED ARE ONLY FOR DESCRIPTION PURPOSES.

SB5 TYPE

CHEEFT NUMBER	1078

Caliper Sensor Cover (3 Cables Sensor)

OEM NUMBER	MB

NR	CHEEFT NR	DESCRIPTIONS	DIMENSION	QTY
1	1581	PLASTIC COVER (WITH HOLE)		1
2	1582	SENSOR COVER SEAL		1
3	1575	SCREW WITH RIVET		4
4	1558	PLASTIC COVER CAP		1
5	1550	SEAL		1
6	1587	3 CABLES SENSOR	FOR MB	1
7	1559	SENSOR ADJUSTER PLASTIC	Ø5,3 mm	1
8	1647	SENSOR STABILIZER PLASTIC		1

Caliper Adjusting Shaft

CHEEFT NUMBER	1012
OEM NUMBER	

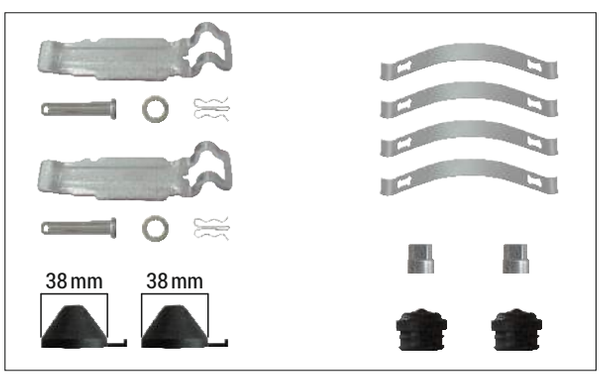

Caliper Pad Retainer Repair Kit

CHEEFT NUMBER	1051
OEM NUMBER	

ORIGINAL PART NUMBERS,MARKS AND MODELS MENTIONED ARE ONLY FOR DESCRIPTION PURPOSES.

SB5 TYPE

Caliper Calibration Bolt	
CHEEFT NUMBER	1008
OEM NUMBER	

Caliper Roller Bearings	
CHEEFT NUMBER	1168
OEM NUMBER	

Caliper Chain (12 links)	
CHEEFT NUMBER	1169
OEM NUMBER	

Caliper Lever	
CHEEFT NUMBER	1180
OEM NUMBER	

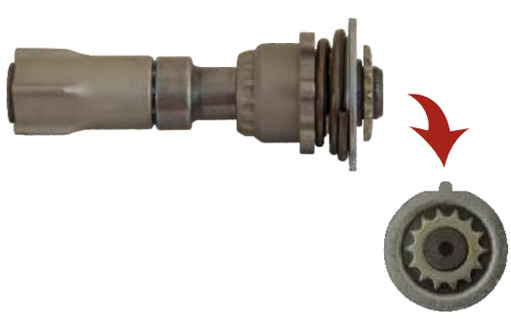

Caliper Adjusting Mechanism	
CHEEFT NUMBER	1064
OEM NUMBER	

ORIGINAL PART NUMBERS,MARKS AND MODELS MENTIONED ARE ONLY FOR DESCRIPTION PURPOSES.

SB5 TYPE

CHEEFT NUMBER	1225

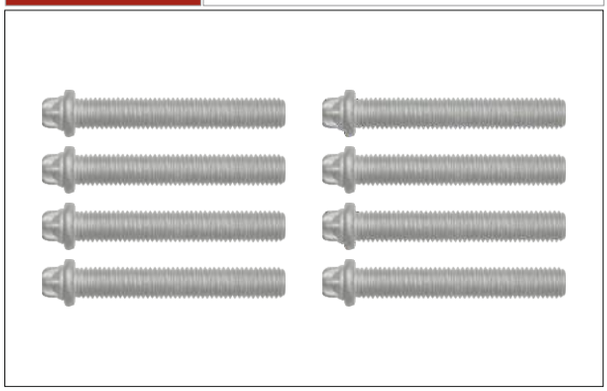

Cover Bolt Kit

OEM NUMBER	

NR	CHEEFT NR	DESCRIPTIONS	DIMENSION	QTY
1	1652	COVER BOLT	M12 x 1,75 x 80 mm	8

CHEEFT NUMBER	1226

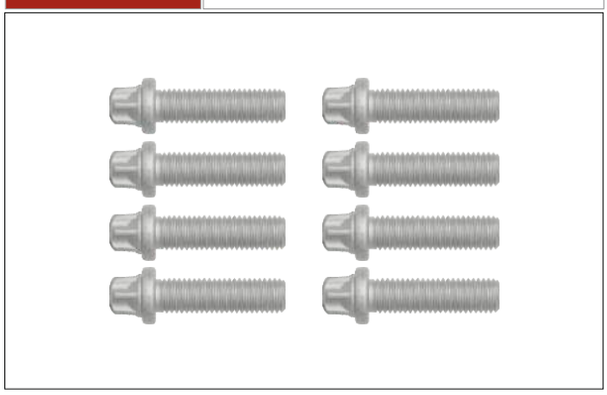

Cover Bolt Kit

OEM NUMBER	

NR	CHEEFT NR	DESCRIPTIONS	DIMENSION	QTY
1	1653	COVER BOLT	M14 x 2 x 52 mm	8

CHEEFT NUMBER	1227

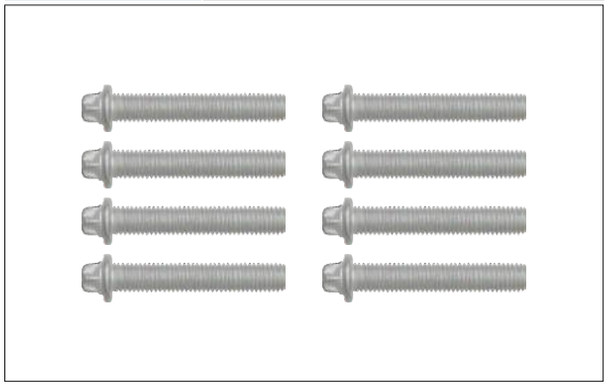

Cover Bolt Kit

OEM NUMBER	

NR	CHEEFT NR	DESCRIPTIONS	DIMENSION	QTY
1	1654	COVER BOLT	M10 x 1,5 x 60 mm	8

ORIGINAL PART NUMBERS,MARKS AND MODELS MENTIONED ARE ONLY FOR DESCRIPTION PURPOSES.

SB5 TYPE

CHEEFT NUMBER	1204

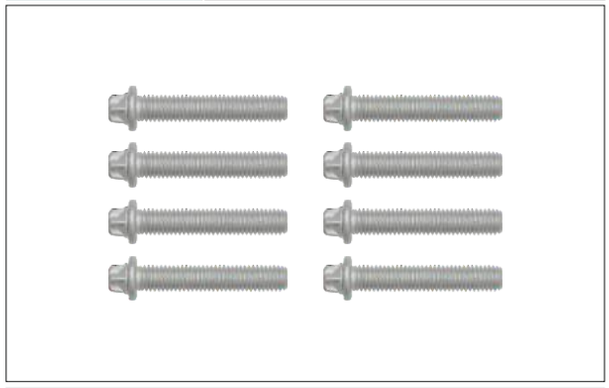

Cover Bolt Kit

OEM NUMBER	

NR	CHEEFT NR	DESCRIPTIONS	DIMENSION	QTY
1	1663	COVER BOLT	M8 x 1,25 x 45 mm	8

CHEEFT NUMBER	1098

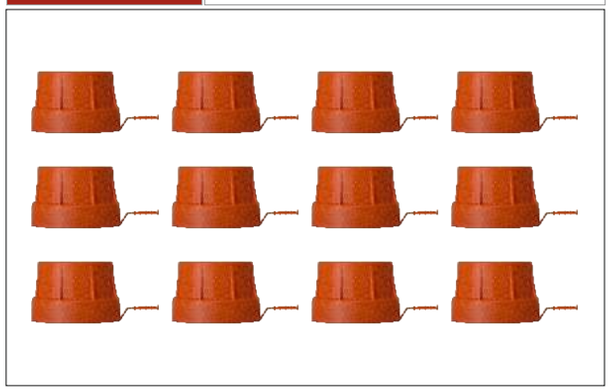

Rubber Bush Cap Kit (Short)

OEM NUMBER	

NR	CHEEFT NR	DESCRIPTIONS	DIMENSION	QTY
1	1661	RUBBER BUSH CAP (SHORT)		12

CHEEFT NUMBER	1099

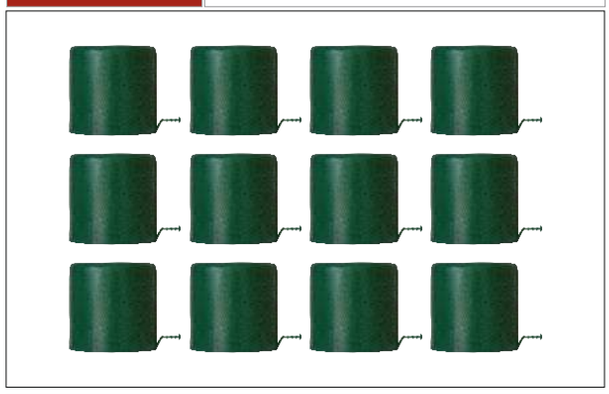

Rubber Bush Cap Kit (Long)

OEM NUMBER	

NR	CHEEFT NR	DESCRIPTIONS	DIMENSION	QTY
1	1662	RUBBER BUSH CAP (LONG)		12

ORIGINAL PART NUMBERS,MARKS AND MODELS MENTIONED ARE ONLY FOR DESCRIPTION PURPOSES.

SB5 TYPE

CHEEFT NUMBER	1158

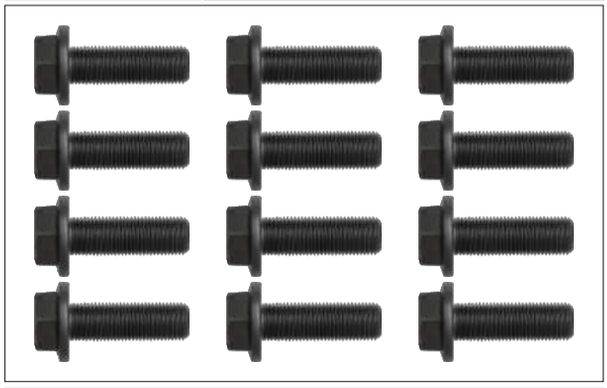

Caliper Connecting Bolt Kit

OEM NUMBER	

NR	CHEEFT NR	DESCRIPTIONS	DIMENSION	QTY
1	1665	BOLT	M16 x 1,5 x 50 mm	12

12-160 MN SET

CHEEFT NUMBER	CHS1001

NR	CHEEFT NR	DESCRIPTIONS	QTY
1	1002	CALIPER GUIDES & SEALS REPAIR KIT	1
2	1541	STEEL CAP	1
3	1553	O-RING	1
4	1008	CALIPER CALIBRATION BOLT	1
5	1012	CALIPER ADJUSTING SHAFT	1
6	1064	CALIPER ADJUSTING MECHANISM	1
7	1014	CALIPER BRIDGE ASSEMBLY	1
8	1533	TAPPET & BOOT ASSEMBLY (Ø74 mm)	1
9	1520	TAPPET BUSH (Ø18 x Ø16 x 10 mm)	1
10	1537	INNER SEAL	1

NR	CHEEFT NR	DESCRIPTIONS	QTY
11	1168	CALIPER ROLLER BEARINGS	1
12	1169	CALIPER CHAIN (12 LINKS)	1
13	1180	CALIPER LEVER	1

ORIGINAL PART NUMBERS,MARKS AND MODELS MENTIONED ARE ONLY FOR DESCRIPTION PURPOSES.

C-HEEFT®
AIR DISC BRAKE CALIPER REPAIR KITS

SB6

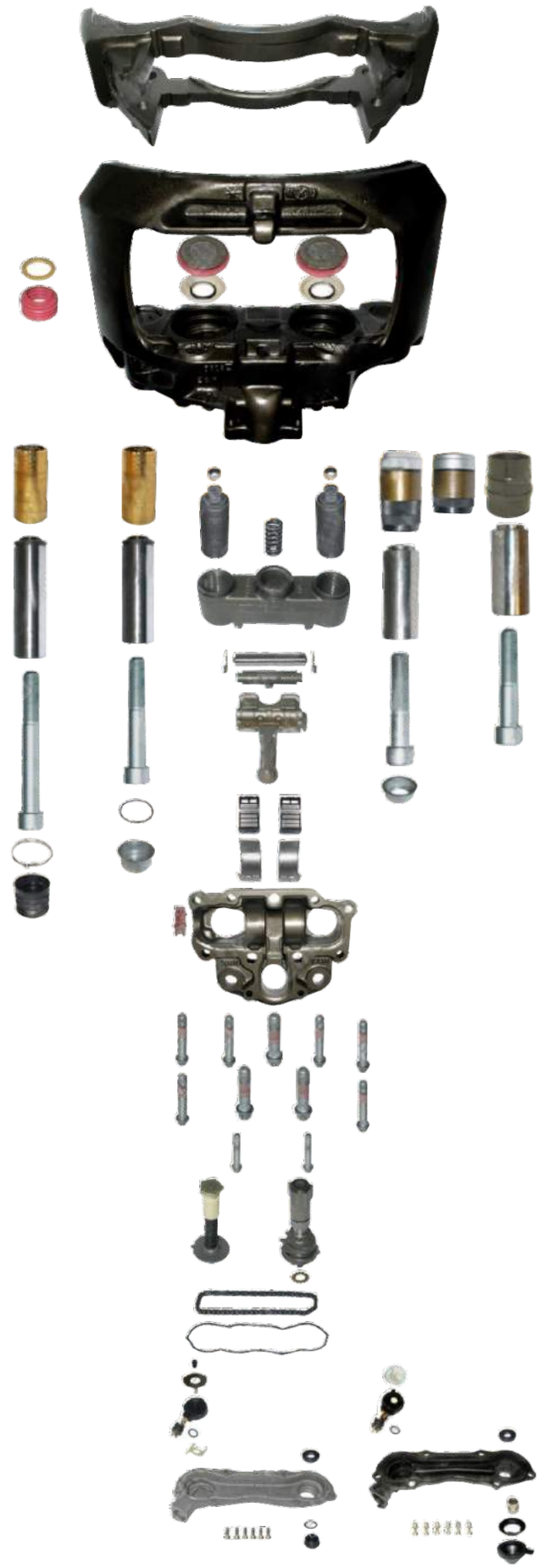

KNR

SB6/SB7 TYPE

Always the Best...

EAC CE UDEM JAS-ANZ ISO 9001 2015

C-HEEFT®

AIR DISC BRAKE CALIPER REPAIR KITS

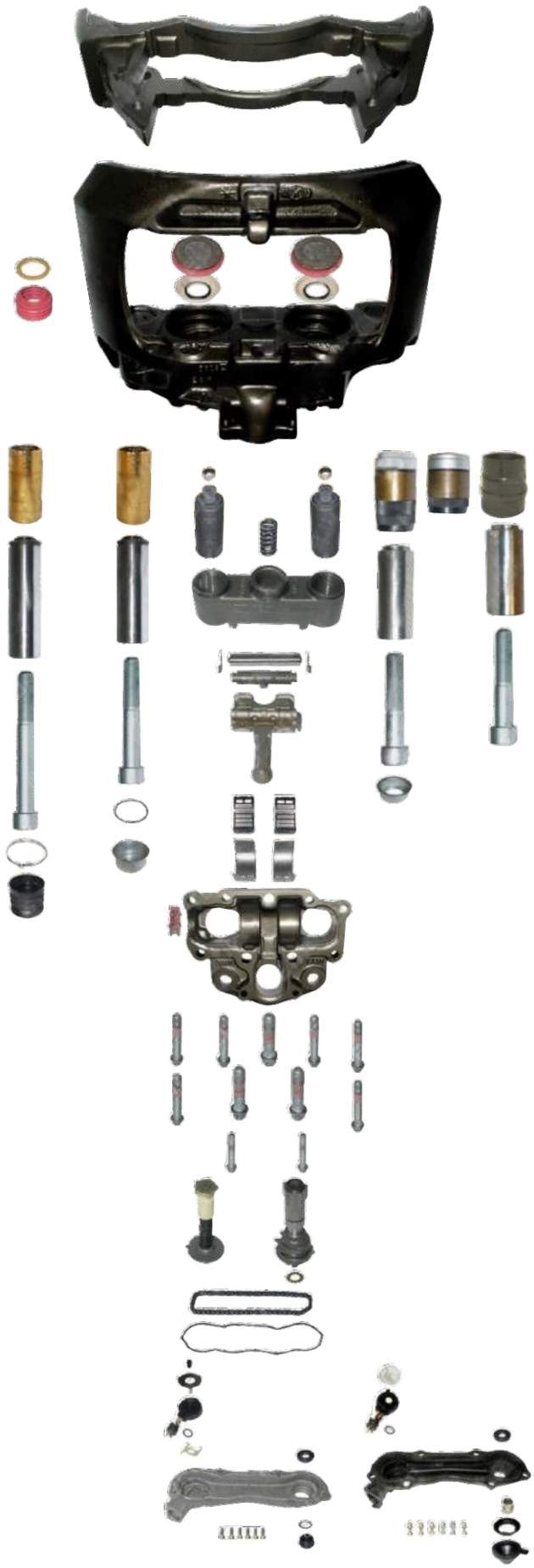

SB7 AXIAL

KNR

SB6/SB7 TYPE

Always the Best...

EAC CE UDEM JAS-ANZ ISO 9001 2015

SB6/SB7 TYPE

CHEEFT NUMBER	1002

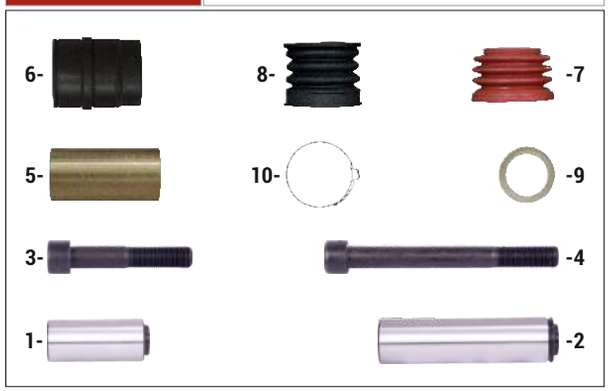

Caliper Guides & Seals Repair Kit

OEM NUMBER	II369100062 - II339680062 - MB 000 420 1282 MN 81.50822.6009 - SCN 1390427 - 2121643 DF 1142142-1198153 -1198154 -1448915 NEOPLAN 11015565 - IVECO 93162048

NR	CHEEFT NR	DESCRIPTIONS	DIMENSION	QTY
1	1502	GUIDE PIN	Ø34 x 80 mm	1
2	1507	GUIDE PIN	Ø36 x 145 mm	1
3	1514	BOLT	M16 x 1,5 x 87 mm	1
4	1518	BOLT	M16 x 1,5 x 150 mm	1
5	1521	BRONZE BUSH	Ø40 x Ø36 x 82 mm	1
6	1525	RUBBER BUSH		1
7	1531	INNER BOOT		1
8	1532	OUTER BOOT		1
9	1551	INNER BOOT RING		1
10	1552	OUTER BOOT CLAMP		1

CHEEFT NUMBER	1003

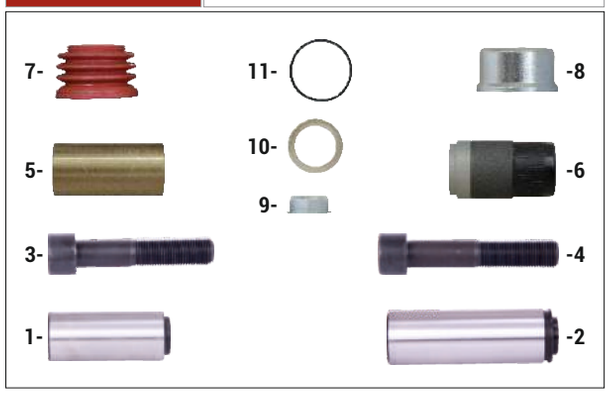

Caliper Guides & Seals Repair Kit

OEM NUMBER	K001532 - SCN 1472919 B.V 09.801.06.31.0

NR	CHEEFT NR	DESCRIPTIONS	DIMENSION	QTY
1	1501	GUIDE PIN	Ø32 x 80 mm	1
2	1505	GUIDE PIN	Ø36 x 113,70 mm	1
3	1513	BOLT	M16 x 1,5 x 80 mm	1
4	1514	BOLT	M16 x 1,5 x 87 mm	1
5	1521	BRONZE BUSH	Ø40 x Ø36 x 82 mm	1
6	1524	METAL-RUBBER BUSH	Ø35 mm (metal end)	1
7	1531	INNER BOOT		1
8	1541	STEEL CAP	Ø50 x 28 mm	1
9	1542	STEEL CAP	Ø26 x 11,5 mm	1
10	1551	INNER BOOT RING		1
11	1553	O-RING		1

CHEEFT NUMBER	1004

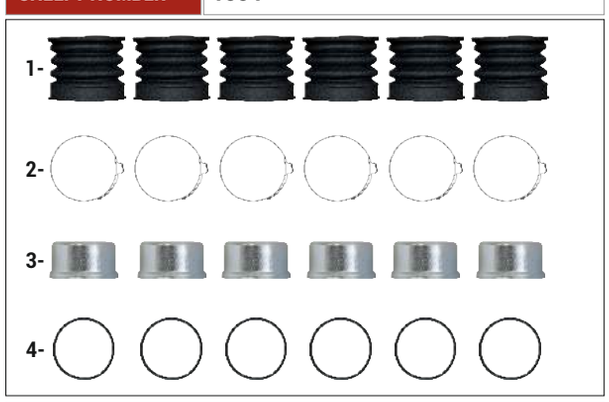

Caliper Outer Boots & Steel Caps

OEM NUMBER	K001301 - MN 81.50822.6025 SCN 1439494 - 2121839

NR	CHEEFT NR	DESCRIPTIONS	DIMENSION	QTY
1	1532	OUTER BOOT		6
2	1552	OUTER BOOT CLAMP		6
3	1541	STEEL CAP	Ø50 x 28 mm	6
4	1553	O-RING		6

ORIGINAL PART NUMBERS,MARKS AND MODELS MENTIONED ARE ONLY FOR DESCRIPTION PURPOSES.

SB6/SB7 TYPE

CHEEFT NUMBER	1194

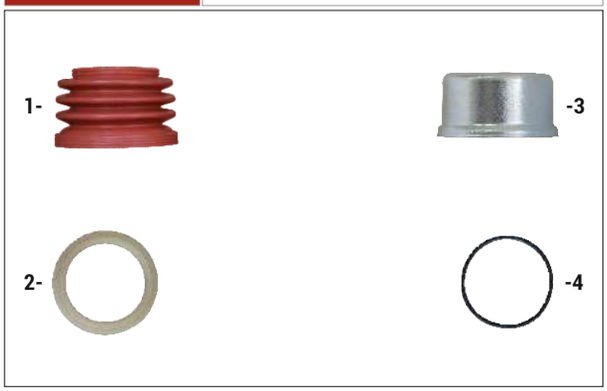

Boots & Cap Repair Kit

OEM NUMBER	II328090061 - MB 001 420 5283 - DF 1448914 SCN 1415150 - MN 81.50822.6008 IVECO 93162049 - B.V 09.801.06.11.0

NR	CHEEFT NR	DESCRIPTIONS	DIMENSION	QTY
1	1531	INNER BOOT		1
2	1551	INNER BOOT RING		1
3	1541	STEEL CAP	Ø50 x 28 mm	1
4	1553	O-RING		1

CHEEFT NUMBER	1017

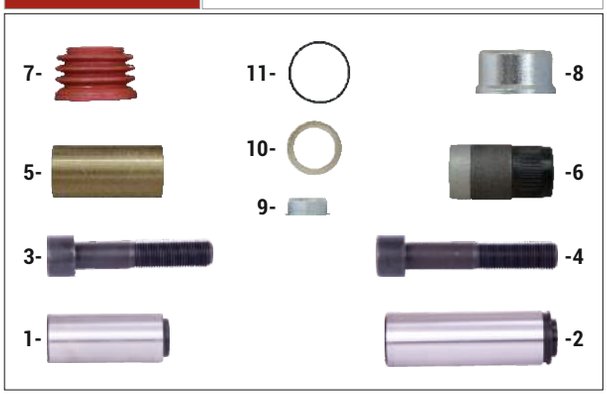

Caliper Guides & Seals Repair Kit

OEM NUMBER	K000375 - MB 000 420 2982 - IVECO 42538002 B.V 09.801.06.24.0 - MN 81.50822.6023

NR	CHEEFT NR	DESCRIPTIONS	DIMENSION	QTY
1	1501	GUIDE PIN	Ø32 x 80 mm	1
2	1505	GUIDE PIN	Ø36 x 113,70 mm	1
3	1513	BOLT	M16 x 1,5 x 80 mm	1
4	1514	BOLT	M16 x 1,5 x 87 mm	1
5	1521	BRONZE BUSH	Ø40 x Ø36 x 82 mm	1
6	1522	METAL-RUBBER BUSH	Ø39 mm (metal end)	1
7	1531	INNER BOOT		1
8	1541	STEEL CAP	Ø50 x 28 mm	1
9	1542	STEEL CAP	Ø26 x 11,5 mm	1
10	1551	INNER BOOT RING		1
11	1553	O-RING		1

CHEEFT NUMBER	1018

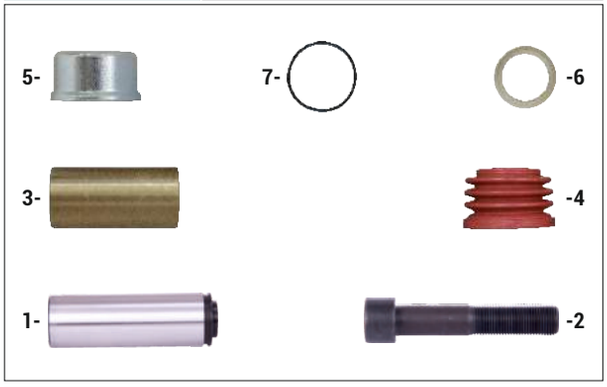

Caliper Guide & Seals Repair Kit

OEM NUMBER	K000696 - II310370066 - MB 002 420 0383 SF 3 434 3805 00

NR	CHEEFT NR	DESCRIPTIONS	DIMENSION	QTY
1	1505	GUIDE PIN	Ø36 x 113,70 mm	1
2	1514	BOLT	M16 x 1,5 x 87 mm	1
3	1521	BRONZE BUSH	Ø40 x Ø36 x 82 mm	1
4	1531	INNER BOOT		1
5	1541	STEEL CAP	Ø50 x 28 mm	1
6	1551	INNER BOOT RING		1
7	1553	O-RING		1

ORIGINAL PART NUMBERS,MARKS AND MODELS MENTIONED ARE ONLY FOR DESCRIPTION PURPOSES.

SB6/SB7 TYPE

CHEEFT NUMBER	1022

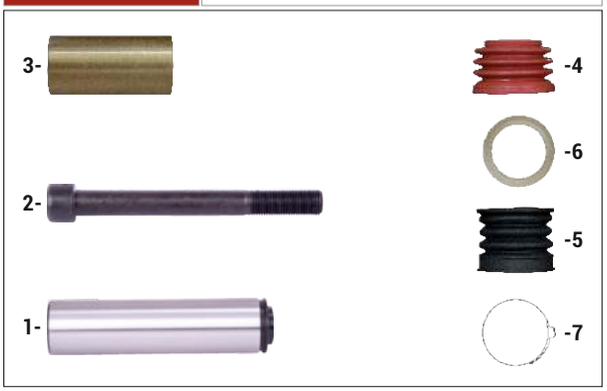

Caliper Guide & Seals Repair Kit

OEM NUMBER	K000935 - SF 3 434 3802 00

NR	CHEEFT NR	DESCRIPTIONS	DIMENSION	QTY
1	1507	GUIDE PIN	Ø36 x 145 mm	1
2	1518	BOLT	M16 x 1,5 x 150 mm	1
3	1521	BRONZE BUSH	Ø40 x Ø36 x 82 mm	1
4	1531	INNER BOOT		1
5	1532	OUTER BOOT		1
6	1551	INNER BOOT RING		1
7	1552	OUTER BOOT CLAMP		1

CHEEFT NUMBER	1023

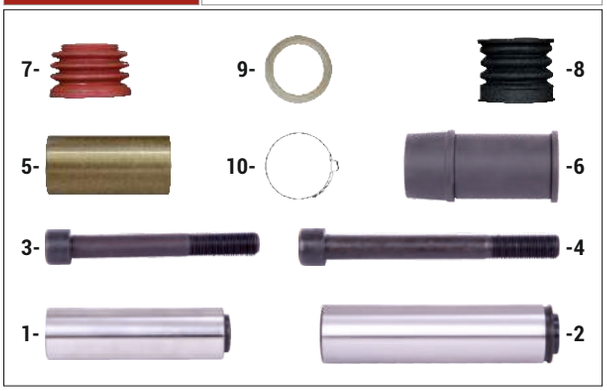

Caliper Guide & Seals Repair Kit

OEM NUMBER	II358510062 - MB 000 420 1182 - 050 121 1047 SCN 1415149 - 1415154 - 1415515

NR	CHEEFT NR	DESCRIPTIONS	DIMENSION	QTY
1	1503	GUIDE PIN	Ø34 x 120 mm	1
2	1507	GUIDE PIN	Ø36 x 145 mm	1
3	1516	BOLT	M16 x 1,5 x 125 mm	1
4	1518	BOLT	M16 x 1,5 x 150 mm	1
5	1521	BRONZE BUSH	Ø40 x Ø36 x 82 mm	1
6	1526	RUBBER BUSH	Ø40 x Ø34 x 95 mm	1
7	1531	INNER BOOT		1
8	1532	OUTER BOOT		1
9	1551	INNER BOOT RING		1
10	1552	OUTER BOOT CLAMP		1

CHEEFT NUMBER	1024

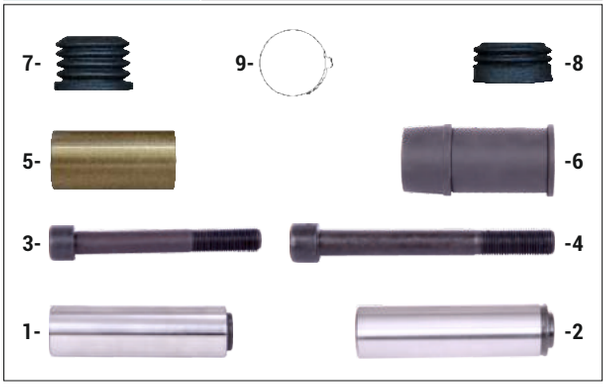

Caliper Guide & Seals Repair Kit

OEM NUMBER	II179320062 - MB 050 121 0167 - DF B230397

NR	CHEEFT NR	DESCRIPTIONS	DIMENSION	QTY
1	1503	GUIDE PIN	Ø34 x 120 mm	1
2	1506	GUIDE PIN	Ø36 x 135 mm	1
3	1516	BOLT	M16 x 1,5 x 125 mm	1
4	1517	BOLT	M16 x 1,5 x 140 mm	1
5	1521	BRONZE BUSH	Ø40 x Ø36 x 82 mm	1
6	1526	RUBBER BUSH	Ø40 x Ø34 x 95 mm	1
7	1539	INNER BOOT		1
8	1540	OUTER BOOT (SHORT)		1
9	1552	OUTER BOOT CLAMP		1

ORIGINAL PART NUMBERS,MARKS AND MODELS MENTIONED ARE ONLY FOR DESCRIPTION PURPOSES.

SB6/SB7 TYPE

CHEEFT NUMBER	1025

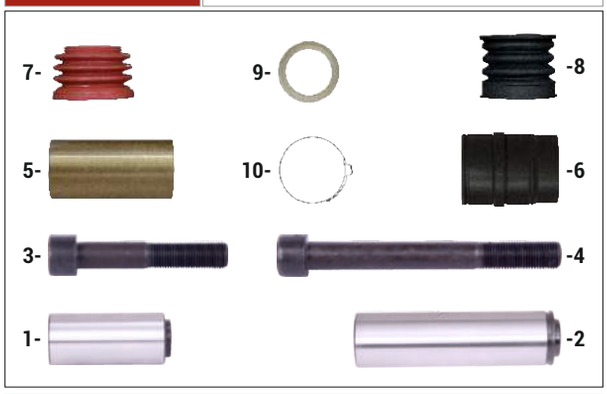

Caliper Guides & Seals Repair Kit

OEM NUMBER	K000132 - MB 000 420 1082 - 000 420 2182 SCN 1390426 - 1798063 - 2121644

NR	CHEEFT NR	DESCRIPTIONS	DIMENSION	QTY
1	1502	GUIDE PIN	Ø34 x 80 mm	1
2	1506	GUIDE PIN	Ø36 x 135 mm	1
3	1514	BOLT	M16 x 1,5 x 87 mm	1
4	1517	BOLT	M16 x 1,5 x 140 mm	1
5	1521	BRONZE BUSH	Ø40 x Ø36 x 82 mm	1
6	1525	RUBBER BUSH		1
7	1531	INNER BOOT		1
8	1532	OUTER BOOT		1
9	1551	INNER BOOT RING		1
10	1552	OUTER BOOT CLAMP		1

CHEEFT NUMBER	1027

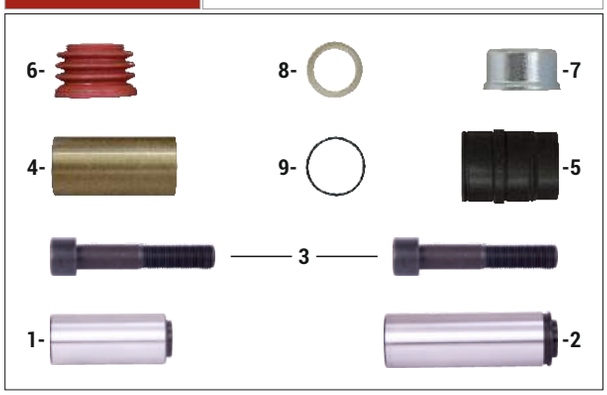

Caliper Guides & Seals Repair Kit

OEM NUMBER	II39769F0062 - SCN 2121645 IVECO 42537451

NR	CHEEFT NR	DESCRIPTIONS	DIMENSION	QTY
1	1502	GUIDE PIN	Ø34 x 80 mm	1
2	1505	GUIDE PIN	Ø36 x 113,70 mm	1
3	1514	BOLT	M16 x 1,5 x 87 mm	2
4	1521	BRONZE BUSH	Ø40 x Ø36 x 82 mm	1
5	1525	RUBBER BUSH		1
6	1531	INNER BOOT		1
7	1541	STEEL CAP	Ø50 x 28 mm	1
8	1551	INNER BOOT RING		1
9	1553	O-RING		1

CHEEFT NUMBER	1050

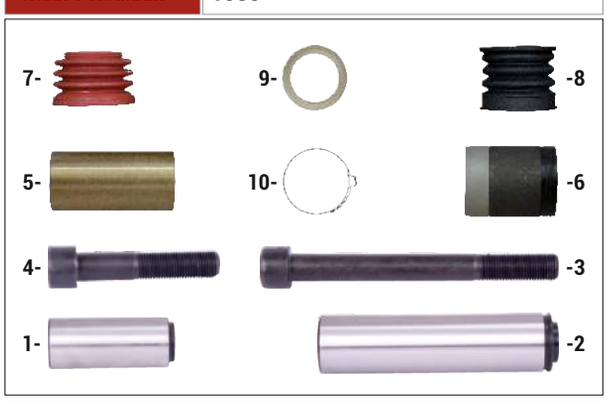

Caliper Guides & Seals Repair Kit

OEM NUMBER	K000687 - DF 1603326

NR	CHEEFT NR	DESCRIPTIONS	DIMENSION	QTY
1	1501	GUIDE PIN	Ø32 x 80 mm	1
2	1507	GUIDE PIN	Ø36 x 145 mm	1
3	1518	BOLT	M16 x 1,5 x 150 mm	1
4	1513	BOLT	M16 x 1,5 x 80 mm	1
5	1521	BRONZE BUSH	Ø40 x Ø36 x 82 mm	1
6	1523	METAL-RUBBER BUSH (SHORT)	Ø39 mm (metal end)	1
7	1531	INNER BOOT		1
8	1532	OUTER BOOT		1
9	1551	INNER BOOT RING		1
10	1552	OUTER BOOT CLAMP		1

ORIGINAL PART NUMBERS,MARKS AND MODELS MENTIONED ARE ONLY FOR DESCRIPTION PURPOSES.

SB6/SB7 TYPE

CHEEFT NUMBER	1181

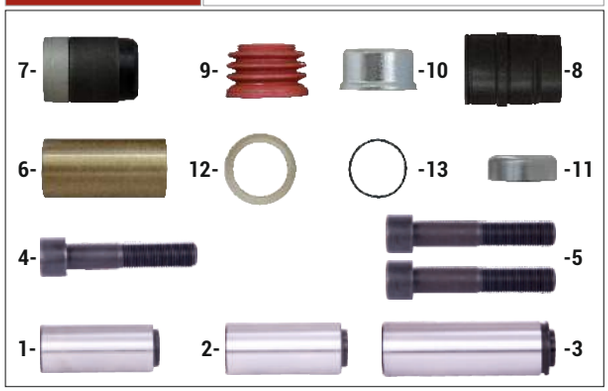

Caliper Guides & Seals Repair Kit

OEM NUMBER	K000365 - MB 000 420 0782 - 000 420 2282

NR	CHEEFT NR	DESCRIPTIONS	DIMENSION	QTY
1	1501	GUIDE PIN	Ø32 x 80 mm	1
2	1502	GUIDE PIN	Ø34 x 80 mm	1
3	1505	GUIDE PIN	Ø36 x 113,70 mm	1
4	1513	BOLT	M16 x 1,5 x 80 mm	1
5	1514	BOLT	M16 x 1,5 x 87 mm	2
6	1521	BRONZE BUSH	Ø40 x Ø36 x 82 mm	1
7	1523	METAL RUBBER BUSH (SHORT)	Ø39 mm (metal end)	1
8	1525	RUBBER BUSH		1
9	1531	INNER BOOT		1
10	1541	STEEL CAP	Ø50 x 28 mm	1
11	1543	STEEL CAP	Ø40 x 14,5 mm	1
12	1551	INNER BOOT RING		1
13	1553	O-RING		1

CHEEFT NUMBER	1061

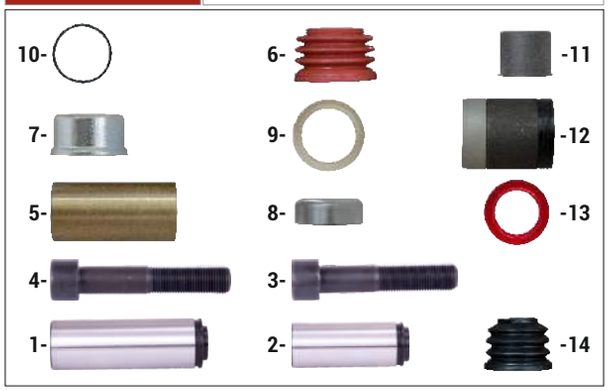

Caliper Guides & Seals Repair Kit

OEM NUMBER	K031844K50 - K011117 SCN 1756390 - 1906779

NR	CHEEFT NR	DESCRIPTIONS	DIMENSION	QTY
1	1505	GUIDE PIN	Ø36 x 113,70 mm	1
2	1510	GUIDE PIN	Ø32 x 84 mm	1
3	1513	BOLT	M16 x 1,5 x 80 mm	1
4	1514	BOLT	M16 x 1,5 x 87 mm	1
5	1521	BRONZE BUSH	Ø40 x Ø36 x 82 mm	1
6	1531	INNER BOOT		1
7	1541	STEEL CAP	Ø50 x 28 mm	1
8	1543	STEEL CAP	Ø40 x 14,5 mm	1
9	1551	INNER BOOT RING		1
10	1553	O-RING		1
11	1577	STEEL CAP	Ø42,5 x 37 mm	1
12	1578	METAL-RUBBER BUSH (SHORT)	Ø39 mm (metal end)	1
13	1579	INNER BOOT RING		1
14	1580	INNER BOOT		1

CHEEFT NUMBER	1083

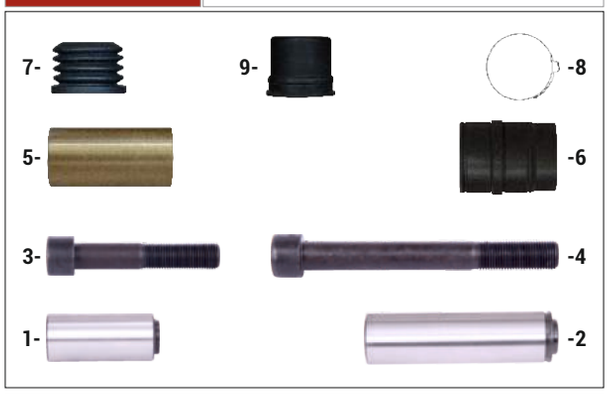

Caliper Guides & Seals Repair Kit

OEM NUMBER	II197140062 - MN 81.80822.6006

NR	CHEEFT NR	DESCRIPTIONS	DIMENSION	QTY
1	1502	GUIDE PIN	Ø34 x 80 mm	1
2	1506	GUIDE PIN	Ø36 x 135 mm	1
3	1514	BOLT	M16 x 1,5 x 87 mm	1
4	1517	BOLT	M16 x 1,5 x 140 mm	1
5	1521	BRONZE BUSH	Ø40 x Ø36 x 82 mm	1
6	1525	RUBBER BUSH		1
7	1539	INNER BOOT		1
8	1552	OUTER BOOT CLAMP		1
9	1656	OUTER BOOT		1

ORIGINAL PART NUMBERS,MARKS AND MODELS MENTIONED ARE ONLY FOR DESCRIPTION PURPOSES.

SB6/SB7 TYPE

CHEEFT NUMBER	1192

Caliper Guides & Seals Repair Kit

OEM NUMBER	II328090062 - SCN 2121642 - B.V 09.801.02.58.0 09.801.02.88.0 - SF 8 531 7002 100 - 8 531 7002 200

NR	CHEEFT NR	DESCRIPTIONS	DIMENSION	QTY
1	1502	GUIDE PIN	Ø34 x 80 mm	1
2	1507	GUIDE PIN	Ø36 x 145 mm	1
3	1513	BOLT	M16 x 1,5 x 80 mm	1
4	1518	BOLT	M16 x 1,5 x 150 mm	1
5	1521	BRONZE BUSH	Ø40 x Ø36 x 82 mm	1
6	1525	RUBBER BUSH		1
7	1531	INNER BOOT		1
8	1532	OUTER BOOT		1
9	1551	INNER BOOT RING		1
10	1552	OUTER BOOT CLAMP		1

CHEEFT NUMBER	1198

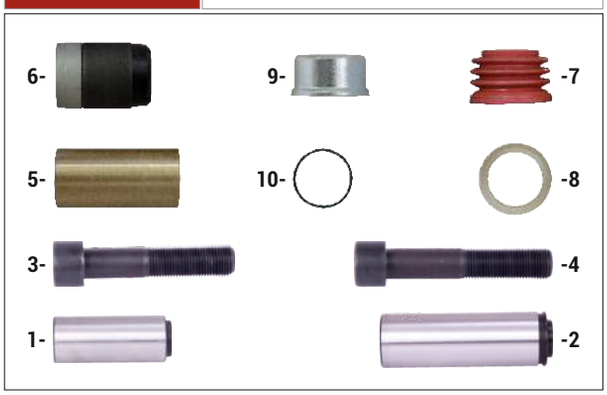

Caliper Guides & Seals Repair Kit

OEM NUMBER	K048371K50 - MN 81.50822.6036 SCN 2121648

NR	CHEEFT NR	DESCRIPTIONS	DIMENSION	QTY
1	1501	GUIDE PIN	Ø32 x 80 mm	1
2	1505	GUIDE PIN	Ø36 x 113,70 mm	1
3	1513	BOLT	M16 x 1,5 x 80 mm	1
4	1514	BOLT	M16 x 1,5 x 87 mm	1
5	1521	BRONZE BUSH	Ø40 x Ø36 x 82 mm	1
6	1523	METAL-RUBBER BUSH (SHORT)	Ø39 mm (metal end)	1
7	1531	INNER BOOT		1
8	1551	INNER BOOT RING		1
9	1541	STEEL CAP	Ø50 x 28 mm	1
10	1553	O-RING		1

CHEEFT NUMBER	1195

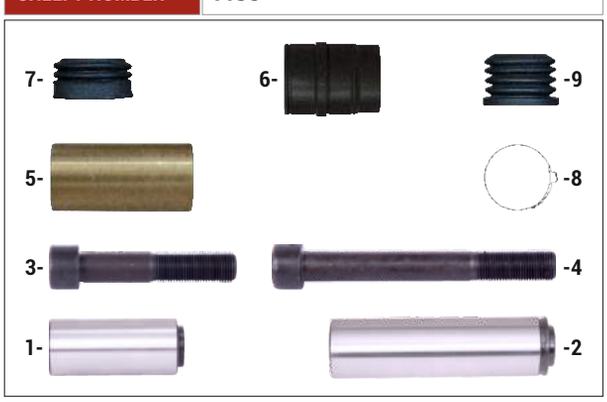

Caliper Guides & Seals Repair Kit

OEM NUMBER	II197330062

NR	CHEEFT NR	DESCRIPTIONS	DIMENSION	QTY
1	1502	GUIDE PIN	Ø34 x 80 mm	1
2	1506	GUIDE PIN	Ø36 x 135 mm	1
3	1514	BOLT	M16 x 1,5 x 87 mm	1
4	1517	BOLT	M16 x 1,5 x 140 mm	1
5	1521	BRONZE BUSH	Ø40 x Ø36 x 82 mm	1
6	1525	RUBBER BUSH		1
7	1540	OUTER BOOT (SHORT)		1
8	1552	OUTER BOOT CLAMP		1
9	1539	INNER BOOT		1

ORIGINAL PART NUMBERS,MARKS AND MODELS MENTIONED ARE ONLY FOR DESCRIPTION PURPOSES.

SB6/SB7 TYPE

CHEEFT NUMBER	1040

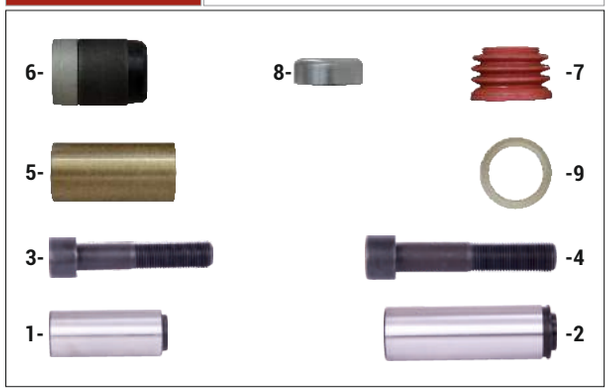

Caliper Guides & Seals Repair Kit

OEM NUMBER	K001915 - K048389K50 - MB 000 420 4682 MN 81.50822.6034 - 81.50822.6037 SCN 1477675 - 1527631 - 2121646 - DF 1639100

NR	CHEEFT NR	DESCRIPTIONS	DIMENSION	QTY
1	1501	GUIDE PIN	Ø32 x 80 mm	1
2	1505	GUIDE PIN	Ø36 x 113,70 mm	1
3	1513	BOLT	M16 x 1,5 x 80 mm	1
4	1514	BOLT	M16 x 1,5 x 87 mm	1
5	1521	BRONZE BUSH	Ø40 x Ø36 x 82 mm	1
6	1523	METAL-RUBBER BUSH (SHORT)	Ø39 mm (metal end)	1
7	1531	INNER BOOT		1
8	1543	STEEL CAP	Ø40 x 14,5 mm	1
9	1551	INNER BOOT RING		1

CHEEFT NUMBER	1184

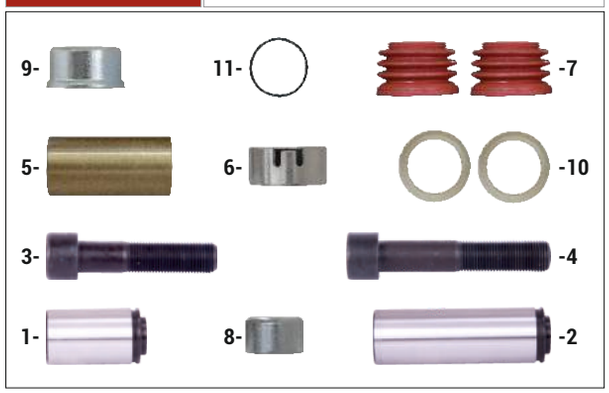

Caliper Guide & Seals Repair Kit

OEM NUMBER	K010813 - MN 81.50822.6033

NR	CHEEFT NR	DESCRIPTIONS	DIMENSION	QTY
1	1504	GUIDE PIN	Ø36 x 64 mm	1
2	1505	GUIDE PIN	Ø36 x 113,70 mm	1
3	1511	BOLT	M16 x 1,5 x 70 mm	1
4	1514	BOLT	M16 x 1,5 x 87 mm	1
5	1521	BRONZE BUSH	Ø40 x Ø36 x 82 mm	1
6	1527	SLOTTED BUSH	Ø40 x Ø36 x 20 mm	1
7	1531	INNER BOOT		2
8	1544	STEEL CAP	Ø40 x 25 mm	1
9	1541	STEEL CAP	Ø50 x 28 mm	1
10	1551	INNER BOOT RING		2
11	1553	O-RING		1

CHEEFT NUMBER	1224

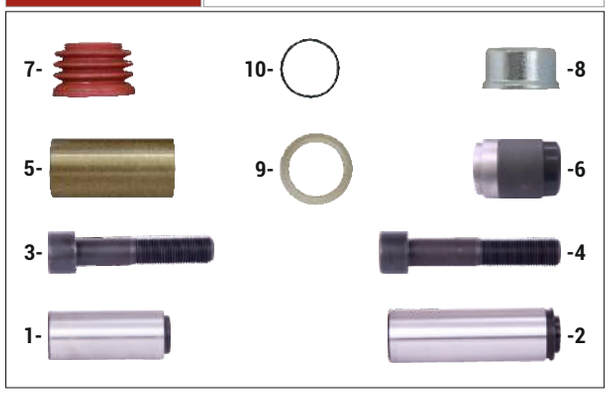

Caliper Guides & Seals Repair Kit

OEM NUMBER	K048396K50 - SCN 2121641

NR	CHEEFT NR	DESCRIPTIONS	DIMENSION	QTY
1	1501	GUIDE PIN	Ø32 x 80 mm	1
2	1505	GUIDE PIN	Ø36 x 113,70 mm	1
3	1513	BOLT	M16 x 1,5 x 80 mm	1
4	1514	BOLT	M16 x 1,5 x 87 mm	1
5	1521	BRONZE BUSH	Ø40 x Ø36 x 82 mm	1
6	1651	METAL RUBBER BUSH (SHORT)	Ø35 mm (metal end)	1
7	1531	INNER BOOT		1
8	1541	STEEL CAP	Ø50 x 28 mm	1
9	1551	INNER BOOT RING		1
10	1553	O-RING		1

ORIGINAL PART NUMBERS,MARKS AND MODELS MENTIONED ARE ONLY FOR DESCRIPTION PURPOSES.

SB6/SB7 TYPE

CHEEFT NUMBER	1203

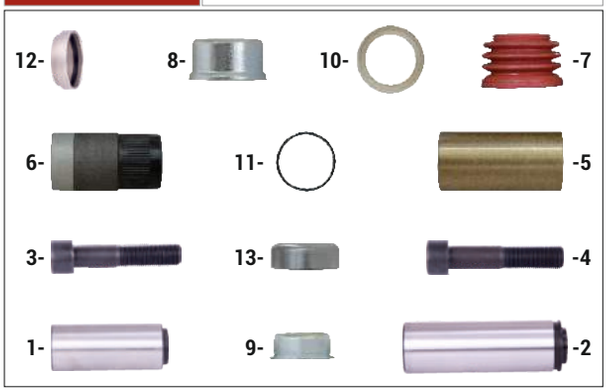

Caliper Guides & Seals Repair Kit

OEM NUMBER	K067417K50 - SCN 2064260 - 2292232 SF 3 434 3820 00

NR	CHEEFT NR	DESCRIPTIONS	DIMENSION	QTY
1	1501	GUIDE PIN	Ø32 x 80 mm	1
2	1505	GUIDE PIN	Ø36 x 113,70 mm	1
3	1513	BOLT	M16 x 1,5 x 80 mm	1
4	1514	BOLT	M16 x 1,5 x 87 mm	1
5	1521	BRONZE BUSH	Ø40 x Ø36 x 82 mm	1
6	1522	METAL RUBBER BUSH	Ø39 mm (metal end)	1
7	1531	INNER BOOT		1
8	1541	STEEL CAP	Ø50 x 28 mm	1
9	1542	STEEL CAP	Ø26 x 11,5 mm	1
10	1551	INNER BOOT RING		1
11	1553	O-RING		1
12	1617	METAL OF RUBBER BUSH	Ø35 mm	1
13	1543	STEEL CAP	Ø40 x 14,5 mm	1

CHEEFT NUMBER	1205

Caliper Guide Repair Kit

OEM NUMBER	K000698 - B.V 09.801.06.90.0

NR	CHEEFT NR	DESCRIPTIONS	DIMENSION	QTY
1	1501	GUIDE PIN	Ø32 x 80 mm	1
2	1513	BOLT	M16 x 1,5 x 80 mm	1
3	1524	METAL-RUBBER BUSH	Ø35 mm (metal end)	1
4	1542	STEEL CAP	Ø26 x 11,5 mm	1

CHEEFT NUMBER	1193

Caliper Guide Repair Kit

OEM NUMBER	K000697

NR	CHEEFT NR	DESCRIPTIONS	DIMENSION	QTY
1	1501	GUIDE PIN	Ø32 x 80 mm	1
2	1522	METAL RUBBER BUSH	Ø39 mm (metal end)	1

ORIGINAL PART NUMBERS,MARKS AND MODELS MENTIONED ARE ONLY FOR DESCRIPTION PURPOSES.

SB6/SB7 TYPE

CHEEFT NUMBER	1090

Caliper Guide Repair Kit

OEM NUMBER	

NR	CHEEFT NR	DESCRIPTIONS	DIMENSION	QTY
1	1501	GUIDE PIN	Ø32 x 80 mm	1
2	1513	BOLT	M16 x 1,5 x 80 mm	1
3	1523	METAL-RUBBER BUSH (SHORT VERSION)	Ø39 mm (metal end)	1

CHEEFT NUMBER	1006

Caliper Rubber Bush & Guide Repair Kit

OEM NUMBER	II368470064 - DF 1448910 - SF 3 434 3801 00 SCN 2121840

NR	CHEEFT NR	DESCRIPTIONS	DIMENSION	QTY
1	1502	GUIDE PIN	Ø34 x 80 mm	1
2	1514	BOLT	M16 x 1,5 x 87 mm	1
3	1525	RUBBER BUSH		1

CHEEFT NUMBER	1202

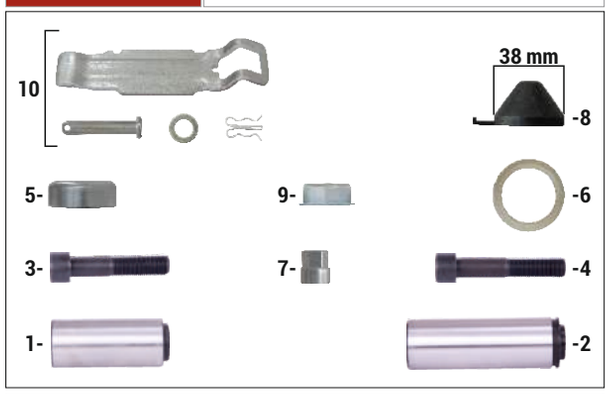

Caliper Guides & Cap Repair Kit

OEM NUMBER	K003800

NR	CHEEFT NR	DESCRIPTIONS	DIMENSION	QTY
1	1501	GUIDE PIN	Ø32 x 80 mm	1
2	1505	GUIDE PIN	Ø36 x 113,70 mm	1
3	1513	BOLT	M16 x 1,5 x 80 mm	1
4	1514	BOLT	M16 x 1,5 x 87 mm	1
5	1543	STEEL CAP	Ø40 x 14,5 mm	1
6	1551	INNER BOOT RING		1
7	1563	ADJUSTING MECHANISM ADAPTER		1
8	1557	PLASTIC COVER CAP	Ø38 mm	1
9	1542	STEEL CAP	Ø26 x 11,5 mm	1
10	1060	CALIPER PAD RETAINER REPAIR KIT		1

ORIGINAL PART NUMBERS,MARKS AND MODELS MENTIONED ARE ONLY FOR DESCRIPTION PURPOSES.

SB6/SB7 TYPE

CHEEFT NUMBER	1084

Caliper Outer Boot & Clamp Kit

OEM NUMBER	II197140063

NR	CHEEFT NR	DESCRIPTIONS	DIMENSION	QTY
1	1552	OUTER BOOT CLAMP		1
2	1656	OUTER BOOT		1

CHEEFT NUMBER	1085

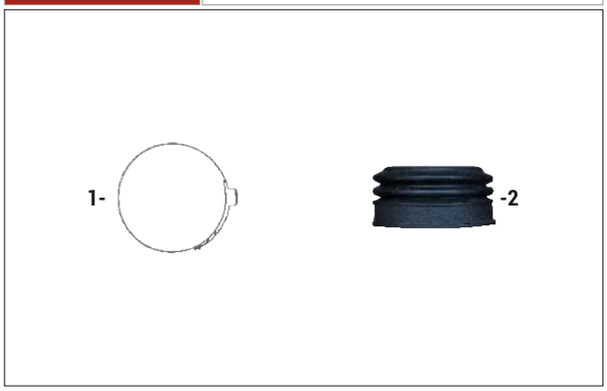

Caliper Outer Boot & Clamp Kit

OEM NUMBER	II344730063 - MN 81.50822.6010 DF 1448600

NR	CHEEFT NR	DESCRIPTIONS	DIMENSION	QTY
1	1552	OUTER BOOT CLAMP		1
2	1540	OUTER BOOT (SHORT)		1

CHEEFT NUMBER	1026

Caliper Steel Cap Repair Kit

OEM NUMBER	II39769F0063 - SF 3 434 3806 00

NR	CHEEFT NR	DESCRIPTIONS	DIMENSION	QTY
1	1541	STEEL CAP	Ø50 x 28 mm	1
2	1553	O-RING		1

ORIGINAL PART NUMBERS,MARKS AND MODELS MENTIONED ARE ONLY FOR DESCRIPTION PURPOSES.

SB6/SB7 TYPE

CHEEFT NUMBER	1015

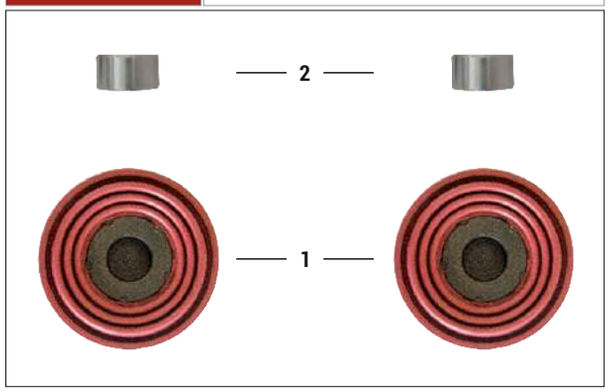

Caliper Piston Tappet Repair Kit

OEM NUMBER	II179320065 - II304130065 SCN 1390429

NR	CHEEFT NR	DESCRIPTIONS	DIMENSION	QTY
1	1533	TAPPET & BOOT ASSEMBLY	Ø74 mm	2
2	1520	TAPPET BUSH	Ø18 x Ø16 x 10 mm	2

CHEEFT NUMBER	1016

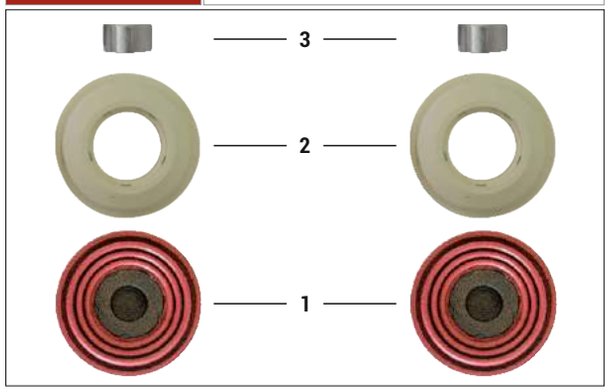

Caliper Piston Tappet & Seals Repair Kit

OEM NUMBER	K000944 - K010604 - MB 000 420 0682 - 000 420 3982 - 000 420 4882 MN 81.50822.6007 - 81.50822.6022 - 81.50822.6032 SCN 1743421 - 1746824 - 1756389 - 1759811 - 1723414 - 2121859 DF 1448913 - 1623221 - IVECO 93162050 - B.V 09.801.02.63.0 SF 3 434 3804 00 - 8 531 7002 800

NR	CHEEFT NR	DESCRIPTIONS	DIMENSION	QTY
1	1533	TAPPET & BOOT ASSEMBLY	Ø74 mm	2
2	1537	INNER SEAL		2
3	1520	TAPPET BUSH	Ø18 x Ø16 x 10 mm	2

CHEEFT NUMBER	1201

Caliper Adjusting Mechanisms Kit

OEM NUMBER	

NR	CHEEFT NR	DESCRIPTIONS	DIMENSION	QTY
1	1029	ADJUSTING MECHANISM		1
2	1030	ADJUSTING SHAFT (WITH SPRING)		1
3	1031	CHAIN (29 LINKS)		1

ORIGINAL PART NUMBERS,MARKS AND MODELS MENTIONED ARE ONLY FOR DESCRIPTION PURPOSES.

SB6/SB7 TYPE

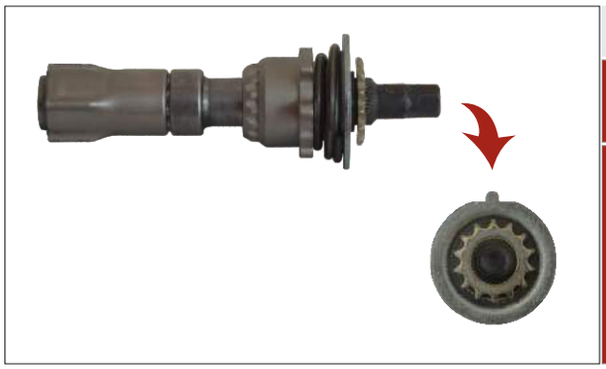

Caliper Adjusting Mechanism	
CHEEFT NUMBER	1029
OEM NUMBER	

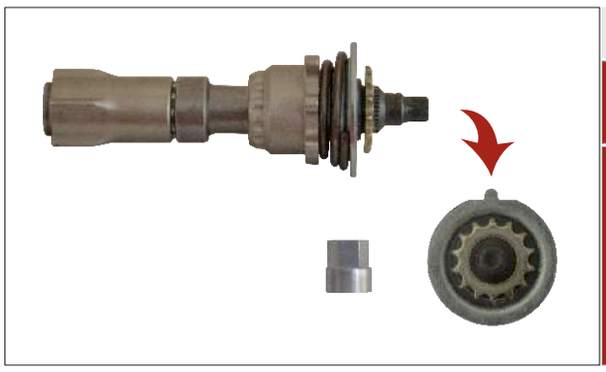

Caliper Adjusting Mechanism (Orig. Type)	
CHEEFT NUMBER	1209
OEM NUMBER	

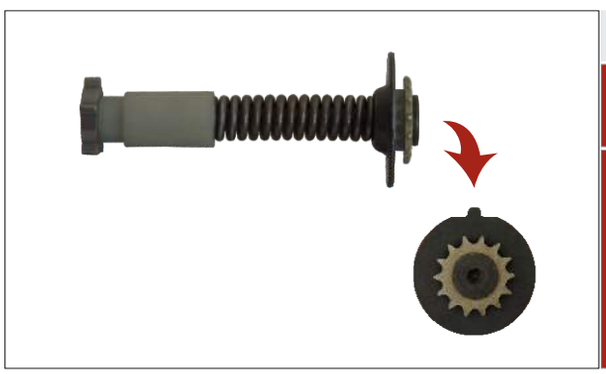

Caliper Adjusting Shaft (With Spring)	
CHEEFT NUMBER	1030
OEM NUMBER	

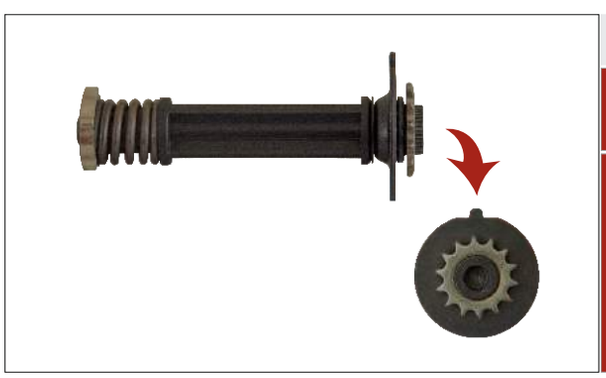

Mechanism With Spring New Type	
CHEEFT NUMBER	1222
OEM NUMBER	

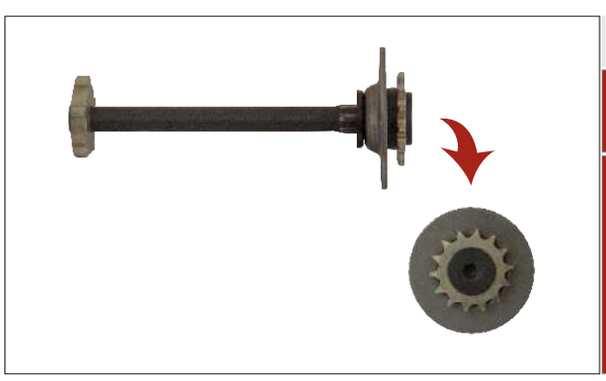

Caliper Adjusting Shaft (Without Spring)	
CHEEFT NUMBER	1034
OEM NUMBER	

ORIGINAL PART NUMBERS,MARKS AND MODELS MENTIONED ARE ONLY FOR DESCRIPTION PURPOSES.

SB6/SB7 TYPE

CHEEFT NUMBER	1100

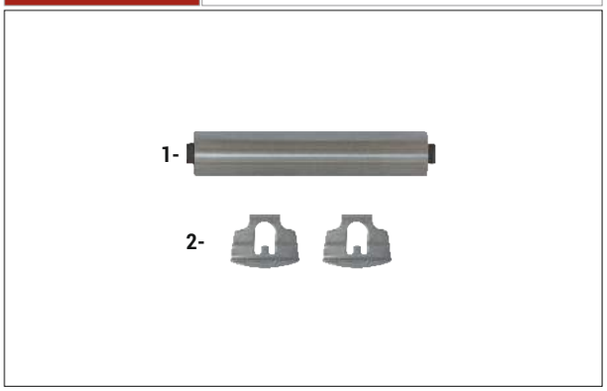

NR	CHEEFT NR	DESCRIPTIONS	DIMENSION	QTY
1	1701	SHAFT HOUSING PIN		1
2	1700	SHAFT HOUSING CLAMP		2

Caliper Shaft Housing Pin & Clamp Repair Kit

OEM NUMBER	

Caliper Calibration Bolt

CHEEFT NUMBER	1008
OEM NUMBER	

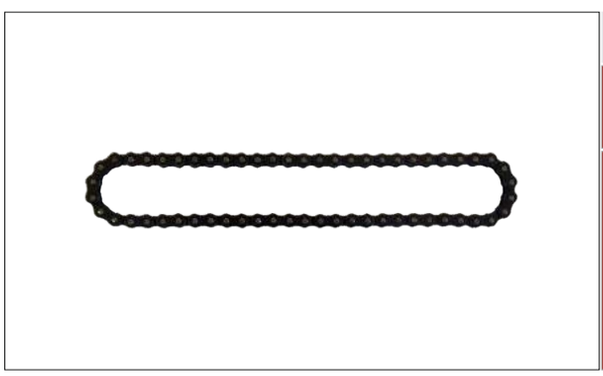

Caliper Chain (29 links)

CHEEFT NUMBER	1031
OEM NUMBER	

Caliper Roller Bearings

CHEEFT NUMBER	1168
OEM NUMBER	

ORIGINAL PART NUMBERS,MARKS AND MODELS MENTIONED ARE ONLY FOR DESCRIPTION PURPOSES.

SB6/SB7 TYPE

CHEEFT NUMBER	1032

Caliper Bridge Assembly

OEM NUMBER	

NR	CHEEFT NR	DESCRIPTIONS	DIMENSION	QTY
1	1571	SPRING	Ø25 x 49 mm	1
2	1591	BRIDGE ASSEMBLY		1

CHEEFT NUMBER	1010

Caliper Adjusting Mechanism Adapter Kit

OEM NUMBER	Z001548 - HNDRCKSN S-29152-5

NR	CHEEFT NR	DESCRIPTIONS	DIMENSION	QTY
1	1563	MECHANISM ADAPTER		5

CHEEFT NUMBER	1011

Caliper Adjusting Mechanism Wheel Kit

OEM NUMBER	

NR	CHEEFT NR	DESCRIPTIONS	DIMENSION	QTY
1	1564	ADJUSTING MECHANISM WHEEL		5

ORIGINAL PART NUMBERS,MARKS AND MODELS MENTIONED ARE ONLY FOR DESCRIPTION PURPOSES.

SB6/SB7 TYPE

Caliper Lever (Angle 12° - 123 mm)	
CHEEFT NUMBER	1206
OEM NUMBER	C73164

Caliper Lever (Angle 0° - 114 mm)	
CHEEFT NUMBER	1035
OEM NUMBER	C73158

Caliper Lever (Angle 12° - 123 mm)	
CHEEFT NUMBER	1036
OEM NUMBER	

Caliper Lever (Angle 0° - 127 mm)	
CHEEFT NUMBER	1171
OEM NUMBER	

Caliper Roller Bearings	
CHEEFT NUMBER	1005
OEM NUMBER	

ORIGINAL PART NUMBERS,MARKS AND MODELS MENTIONED ARE ONLY FOR DESCRIPTION PURPOSES.

SB6/SB7 TYPE

CHEEFT NUMBER	1159

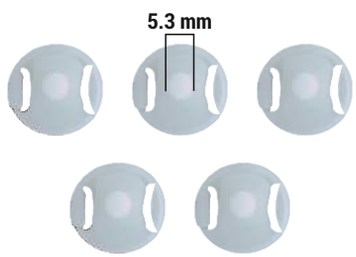

Sensor Adjuster Plastic Kit

OEM NUMBER	

NR	CHEEFT NR	DESCRIPTIONS	DIMENSION	QTY
1	1559	SENSOR ADJUSTER PLASTIC	5,3 mm	5

CHEEFT NUMBER	1218

Sensor Rod Kit (Small)

OEM NUMBER	

NR	CHEEFT NR	DESCRIPTIONS	DIMENSION	QTY
1	1646	SENSOR ROD (SMALL)		5

CHEEFT NUMBER	1068

Caliper Plug Kit

OEM NUMBER	

NR	CHEEFT NR	DESCRIPTIONS	DIMENSION	QTY
1	1586	PLUG	Ø 55/50 x 11 mm	5

ORIGINAL PART NUMBERS,MARKS AND MODELS MENTIONED ARE ONLY FOR DESCRIPTION PURPOSES.

SB6/SB7 TYPE

CHEEFT NUMBER	1182

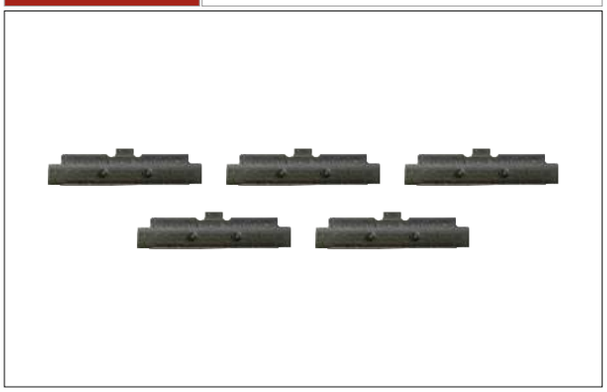

Caliper Lever Bearing Kit

OEM NUMBER	

NR	CHEEFT NR	DESCRIPTIONS	DIMENSION	QTY
1	1597	CALIPER LEVER BEARING		5

CHEEFT NUMBER	1219

Sensor Stabilizer Plastic Kit

OEM NUMBER	

NR	CHEEFT NR	DESCRIPTIONS	DIMENSION	QTY
1	1647	SENSOR STABILIZER PLASTIC		5

CHEEFT NUMBER	1019

Caliper Plastic Cover (Without Sensor)

OEM NUMBER	

NR	CHEEFT NR	DESCRIPTIONS	DIMENSION	QTY
1	1546	PLASTIC COVER		1
2	1554	SENSOR COVER SEAL		1
3	1575	SCREW WITH RIVET		6
4	1550	SEAL		1
5	1557	PLASTIC COVER CAP	Ø38 mm	1

ORIGINAL PART NUMBERS,MARKS AND MODELS MENTIONED ARE ONLY FOR DESCRIPTION PURPOSES.

SB6/SB7 TYPE

CHEEFT NUMBER	1033

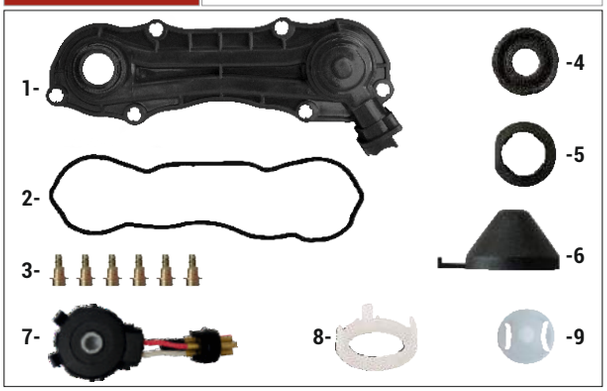

Caliper Sensor Cover (2 Cables Sensor)

OEM NUMBER	

NR	CHEEFT NR	DESCRIPTIONS	DIMENSION	QTY
1	1583	PLASTIC COVER (WITH HOLE)		1
2	1554	SENSOR COVER SEAL		1
3	1575	SCREW WITH RIVET		6
4	1550	SEAL		1
5	1600	CALIPER PLASTIC COVER RING		1
6	1557	PLASTIC COVER CAP	Ø38 mm	1
7	1547	2 CABLES SENSOR		1
8	1647	SENSOR STABILIZER PLASTIC		1
9	1559	SENSOR ADJUSTER PLASTIC	5,3 mm	1

CHEEFT NUMBER	1070

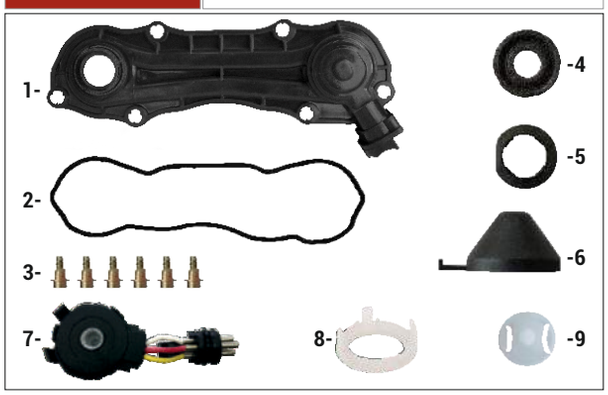

Caliper Sensor Cover (3 Cables Sensor)

OEM NUMBER	MB

NR	CHEEFT NR	DESCRIPTIONS	DIMENSION	QTY
1	1583	PLASTIC COVER (WITH HOLE)		1
2	1554	SENSOR COVER SEAL		1
3	1575	SCREW WITH RIVET		6
4	1550	SEAL		1
5	1600	CALIPER PLASTIC COVER RING		1
6	1557	PLASTIC COVER CAP	Ø38 mm	1
7	1587	3 CABLES SENSOR (FOR MB)		1
8	1647	SENSOR STABILIZER PLASTIC		1
9	1559	SENSOR ADJUSTER PLASTIC	5,3 mm	1

CHEEFT NUMBER	1074

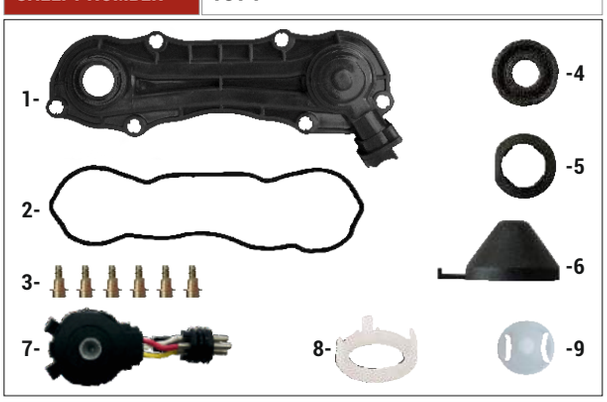

Caliper Sensor Cover (3 Cables Sensor)

OEM NUMBER	MN TGA

NR	CHEEFT NR	DESCRIPTIONS	DIMENSION	QTY
1	1583	PLASTIC COVER (WITH HOLE)		1
2	1554	SENSOR COVER SEAL		1
3	1575	SCREW WITH RIVET		6
4	1550	SEAL		1
5	1600	CALIPER PLASTIC COVER RING		1
6	1557	PLASTIC COVER CAP	Ø38 mm	1
7	1588	3 CABLES SENSOR(FOR MN)		1
8	1647	SENSOR STABILIZER PLASTIC		1
9	1559	SENSOR ADJUSTER PLASTIC	5,3 mm	1

ORIGINAL PART NUMBERS,MARKS AND MODELS MENTIONED ARE ONLY FOR DESCRIPTION PURPOSES.

SB6/SB7 TYPE

CHEEFT NUMBER	1020

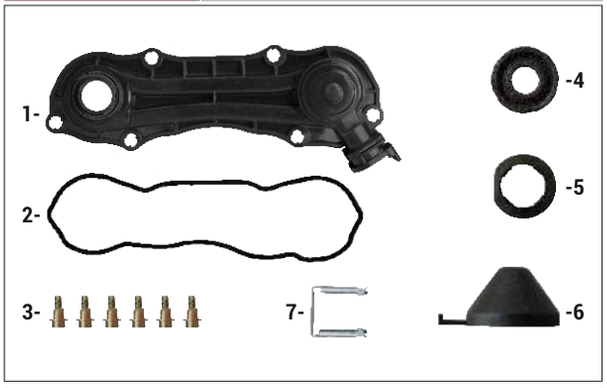

Caliper Plastic Cover (Without Sensor)

OEM NUMBER	

NR	CHEEFT NR	DESCRIPTIONS	DIMENSION	QTY
1	1548	PLASTIC COVER (WITH HOLE)		1
2	1554	SENSOR COVER SEAL		1
3	1575	SCREW WITH RIVET		6
4	1550	SEAL		1
5	1600	CALIPER PLASTIC COVER RING		1
6	1557	PLASTIC COVER CAP	Ø38 mm	1
7	1605	COVER CLIPS		1

CHEEFT NUMBER	1021

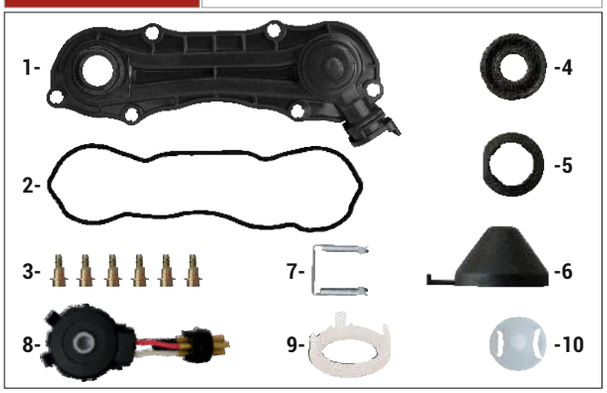

Caliper Sensor Cover (2 Cables Sensor)

OEM NUMBER	

NR	CHEEFT NR	DESCRIPTIONS	DIMENSION	QTY
1	1548	PLASTIC COVER (WITH HOLE)		1
2	1554	SENSOR COVER SEAL		1
3	1575	SCREW WITH RIVET		6
4	1550	SEAL		1
5	1600	CALIPER PLASTIC COVER RING		1
6	1557	PLASTIC COVER CAP	Ø38 mm	1
7	1605	COVER CLIPS		1
8	1547	2 CABLES SENSOR		1
9	1647	SENSOR STABILIZER PLASTIC		1
10	1559	SENSOR ADJUSTER PLASTIC	5,3 mm	1

CHEEFT NUMBER	1071

Caliper Sensor Cover (3 Cables Sensor)

OEM NUMBER	MB

NR	CHEEFT NR	DESCRIPTIONS	DIMENSION	QTY
1	1548	PLASTIC COVER (WITH HOLE)		1
2	1554	SENSOR COVER SEAL		1
3	1575	SCREW WITH RIVET		6
4	1550	SEAL		1
5	1600	CALIPER PLASTIC COVER RING		1
6	1557	PLASTIC COVER CAP	Ø38 mm	1
7	1605	COVER CLIPS		1
8	1587	3 CABLES SENSOR (FOR MB)		1
9	1647	SENSOR STABILIZER PLASTIC		1
10	1559	SENSOR ADJUSTER PLASTIC	5,3 mm	1

ORIGINAL PART NUMBERS,MARKS AND MODELS MENTIONED ARE ONLY FOR DESCRIPTION PURPOSES.

SB6/SB7 TYPE

CHEEFT NUMBER	1079

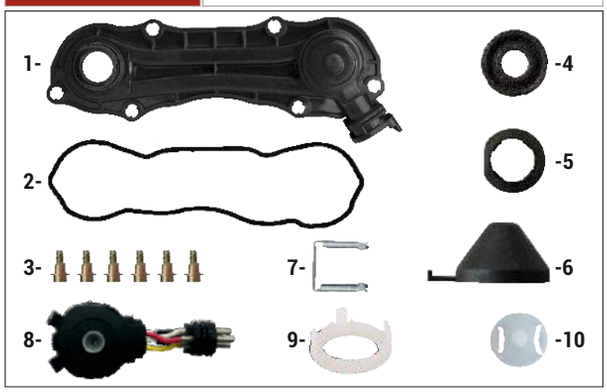

Caliper Sensor Cover (3 Cables Sensor)

OEM NUMBER	MN

NR	CHEEFT NR	DESCRIPTIONS	DIMENSION	QTY
1	1548	PLASTIC COVER (WITH HOLE)		1
2	1554	SENSOR COVER SEAL		1
3	1575	SCREW WITH RIVET		6
4	1550	SEAL		1
5	1600	CALIPER PLASTIC COVER RING		1
6	1557	PLASTIC COVER CAP	Ø38 mm	1
7	1605	COVER CLIPS		1
8	1588	3 CABLES SENSOR (FOR MN)		1
9	1647	SENSOR STABILIZER PLASTIC		1
10	1559	SENSOR ADJUSTER PLASTIC	5,3 mm	1

CHEEFT NUMBER	1166

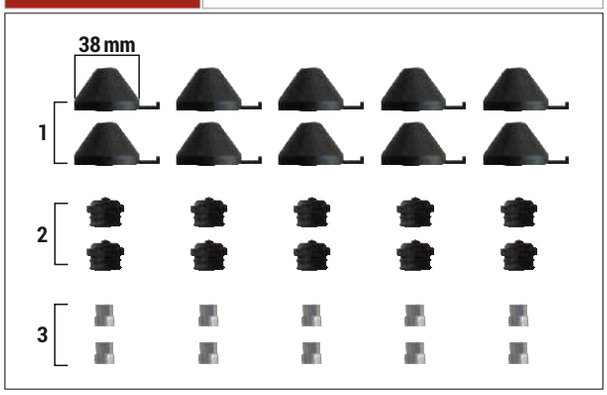

Caliper Plastic Cover Cap Kit

OEM NUMBER	K000945 - MN 81.50822.6024 - SCN 2121868 DF 1439493 - SF 8 531 7002 500

NR	CHEEFT NR	DESCRIPTIONS	DIMENSION	QTY
1	1557	PLASTIC COVER CAP	Ø38 mm	10
2	1558	PLASTIC COVER CAP		10
3	1563	ADJUSTING MECHANISM ADAPTER		10

CHEEFT NUMBER	1167

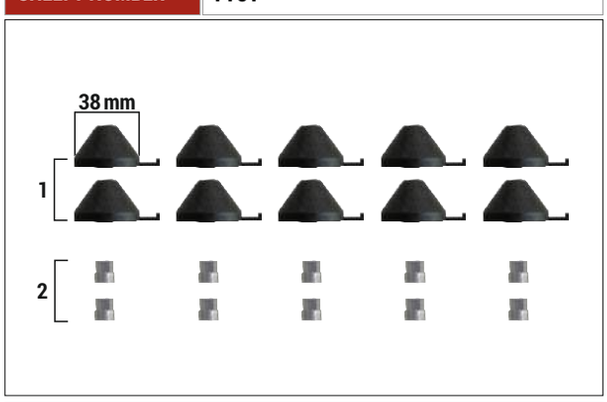

Caliper Plastic Cover Cap Kit

OEM NUMBER	

NR	CHEEFT NR	DESCRIPTIONS	DIMENSION	QTY
1	1557	PLASTIC COVER CAP	Ø38 mm	10
2	1563	ADJUSTING MECHANISM ADAPTER		10

ORIGINAL PART NUMBERS,MARKS AND MODELS MENTIONED ARE ONLY FOR DESCRIPTION PURPOSES.

SB6/SB7 TYPE

CHEEFT NUMBER	1187

Caliper Plastic Cover Cap Kit

OEM NUMBER	

NR	CHEEFT NR	DESCRIPTIONS	DIMENSION	QTY
1	1561	PLASTIC COVER CAP	Ø35 mm	10
2	1558	PLASTIC COVER CAP		10
3	1563	ADJUSTING MECHANISM ADAPTER		10

CHEEFT NUMBER	1188

Caliper Plastic Cover Cap Kit

OEM NUMBER	K003902 - MB 000 420 3248 - SCN 2121869 2198536 - OTHER MODEL ADB22X BNDX 802643 - SCHMITZ 1008453

NR	CHEEFT NR	DESCRIPTIONS	DIMENSION	QTY
1	1561	PLASTIC COVER CAP	Ø35 mm	10
2	1563	ADJUSTING MECHANISM ADAPTER		10

CHEEFT NUMBER	1067

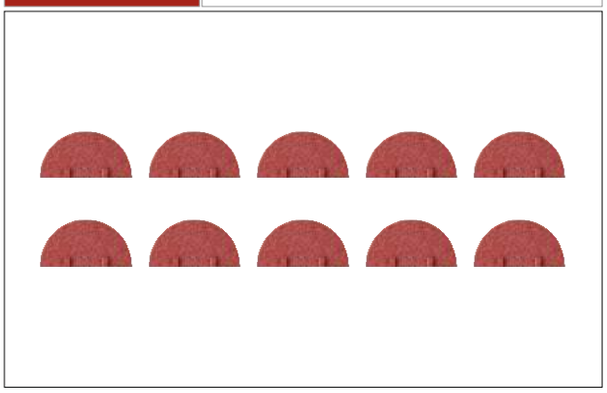

Caliper Support Seal Kit

OEM NUMBER	

NR	CHEEFT NR	DESCRIPTIONS	DIMENSION	QTY
1	1585	SUPPORT SEAL		10

ORIGINAL PART NUMBERS,MARKS AND MODELS MENTIONED ARE ONLY FOR DESCRIPTION PURPOSES.

SB6/SB7 TYPE

CHEEFT NUMBER	1225

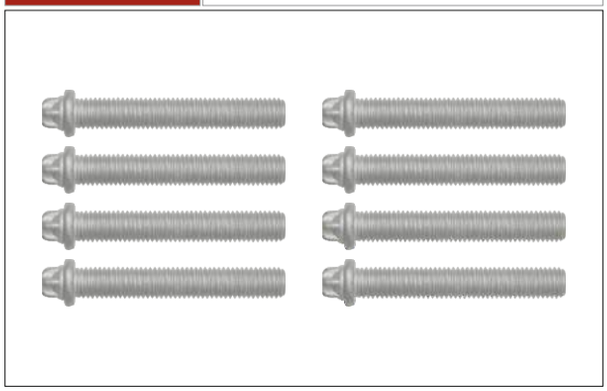

Cover Bolt Kit

OEM NUMBER	

NR	CHEEFT NR	DESCRIPTIONS	DIMENSION	QTY
1	1652	COVER BOLT	M12 x 1,75 x 80 mm	8

CHEEFT NUMBER	1226

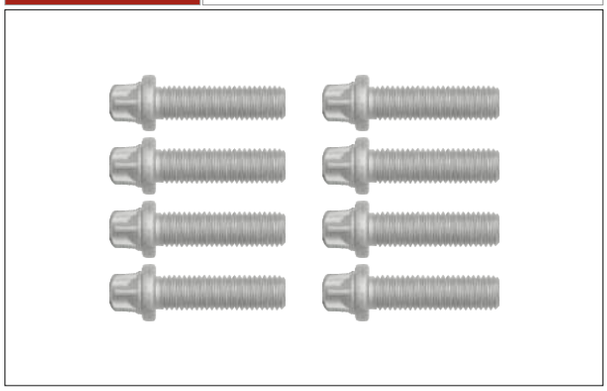

Cover Bolt Kit

OEM NUMBER	

NR	CHEEFT NR	DESCRIPTIONS	DIMENSION	QTY
1	1653	COVER BOLT	M14 x 2 x 52 mm	8

CHEEFT NUMBER	1227

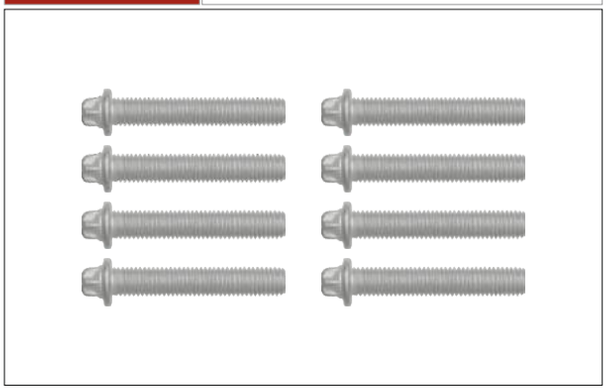

Cover Bolt Kit

OEM NUMBER	

NR	CHEEFT NR	DESCRIPTIONS	DIMENSION	QTY
1	1654	COVER BOLT	M10 x 1,5 x 60 mm	8

ORIGINAL PART NUMBERS,MARKS AND MODELS MENTIONED ARE ONLY FOR DESCRIPTION PURPOSES.

SB6/SB7 TYPE

CHEEFT NUMBER	1204

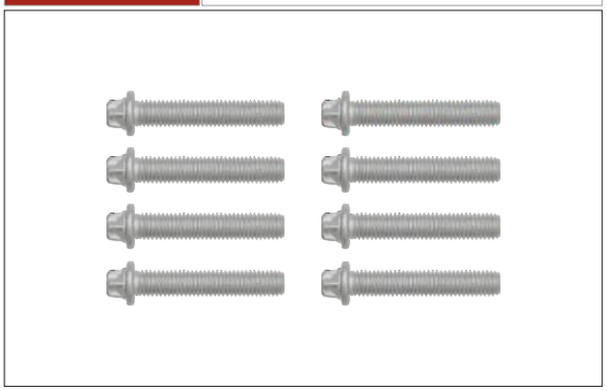

NR	CHEEFT NR	DESCRIPTIONS	DIMENSION	QTY
1	1663	COVER BOLT	M8 x 1,25 x 45 mm	8

Cover Bolt Kit

OEM NUMBER	

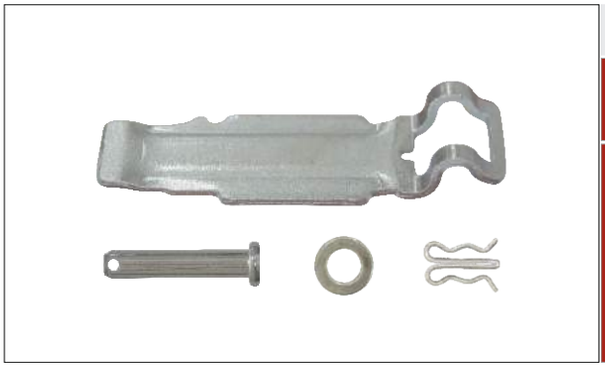

Caliper Pad Retainer Repair Kit

CHEEFT NUMBER	1028
OEM NUMBER	K000133 - MB 000 420 2582

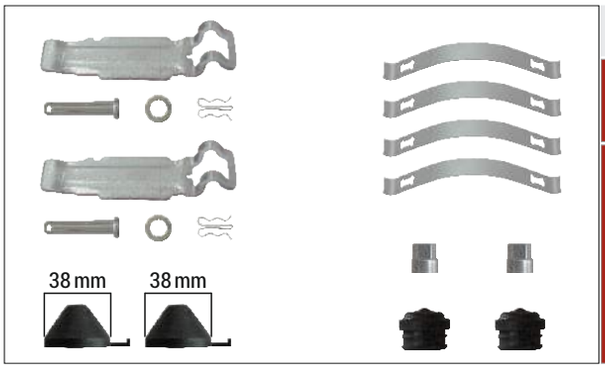

Caliper Pad Retainer Repair Kit

CHEEFT NUMBER	1051
OEM NUMBER	

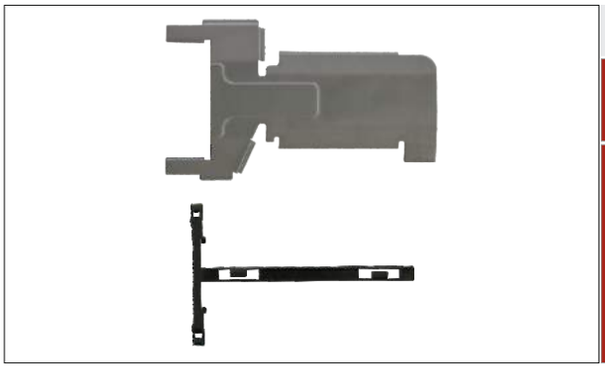

Caliper Cable Protection Kit

CHEEFT NUMBER	1148
OEM NUMBER	

ORIGINAL PART NUMBERS,MARKS AND MODELS MENTIONED ARE ONLY FOR DESCRIPTION PURPOSES.

SB6/SB7 TYPE

CHEEFT NUMBER	1150

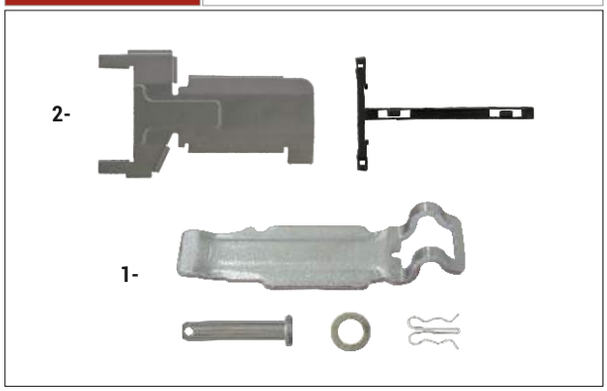

Brake Pad Retainer Repair Kit

OEM NUMBER	

NR	CHEEFT NR	DESCRIPTIONS	DIMENSION	QTY
1	1028	PAD RETAINER REPAIR KIT		1
2	1148	CABLO PROTECTION KIT		1

CHEEFT NUMBER	1151

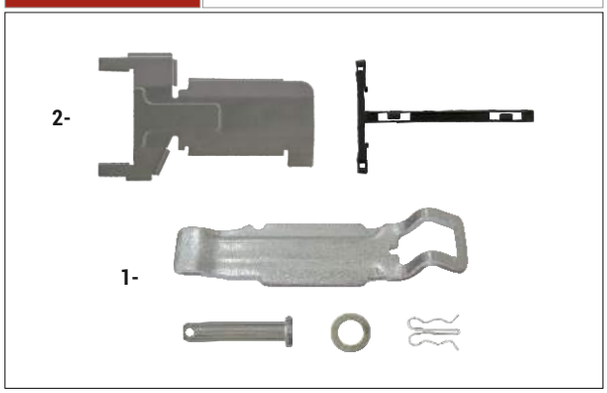

Brake Pad Retainer Repair Kit

OEM NUMBER	K000884

NR	CHEEFT NR	DESCRIPTIONS	DIMENSION	QTY
1	1060	PAD RETAINER REPAIR KIT		1
2	1148	CABLO PROTECTION KIT		1

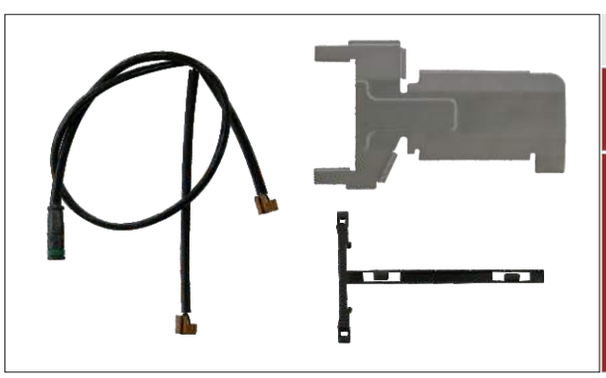

Caliper Cable Protection Kit

CHEEFT NUMBER	1149
OEM NUMBER	

ORIGINAL PART NUMBERS,MARKS AND MODELS MENTIONED ARE ONLY FOR DESCRIPTION PURPOSES.

SB6/SB7 TYPE

CHEEFT NUMBER	1158

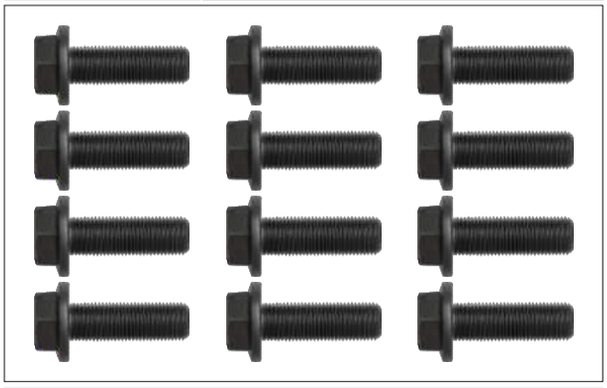

Caliper Connecting Bolt Kit

OEM NUMBER	

NR	CHEEFT NR	DESCRIPTIONS	DIMENSION	QTY
1	1665	BOLT	M16 x 1,5 x 50 mm	12

CHEEFT NUMBER	1098

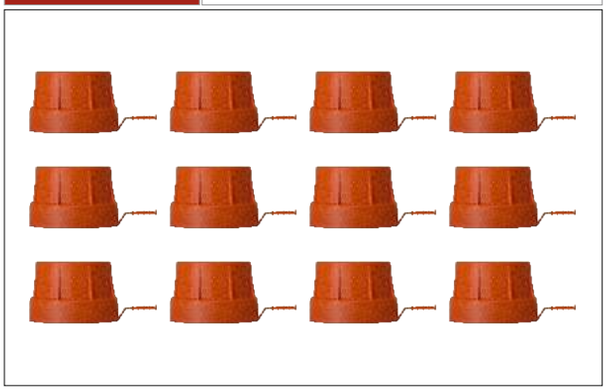

Rubber Bush Cap Kit (Short)

OEM NUMBER	

NR	CHEEFT NR	DESCRIPTIONS	DIMENSION	QTY
1	1661	RUBBER BUSH CAP (SHORT)		12

CHEEFT NUMBER	1099

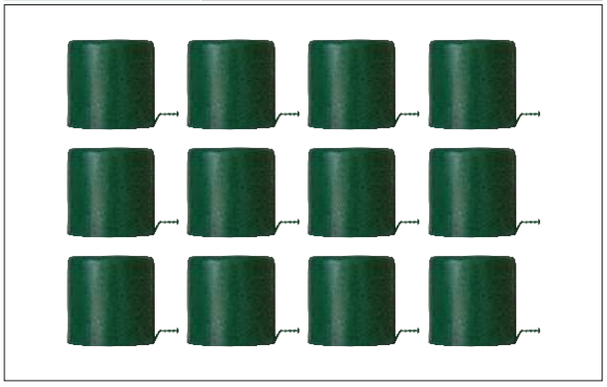

Rubber Bush Cap Kit (Long)

OEM NUMBER	

NR	CHEEFT NR	DESCRIPTIONS	DIMENSION	QTY
1	1662	RUBBER BUSH CAP (LONG)		12

ORIGINAL PART NUMBERS,MARKS AND MODELS MENTIONED ARE ONLY FOR DESCRIPTION PURPOSES.

SB6/SB7 TYPE

MN TGA SET (NEW MODEL)

CHEEFT NUMBER: CHS1003

NR	CHEEFT NR	DESCRIPTIONS	QTY
1	1040	CALIPER GUIDES & SEALS REPAIR KIT	1
2	1032	CALIPER BRIDGE ASSEMBLY	1
3	1016	PISTON & SEALS REPAIR KIT (Ø74 mm)	1
4	1029	CALIPER ADJUSTING MECHANISM	1
5	1030	CALIPER ADJUSTING SHAFT (WITH SPRING)	1
6	1031	CALIPER CHAIN (29 LINKS)	1
7	1168	CALIPER ROLLER BEARINGS	1
8	1008	CALIPER CALIBRATION BOLT	2

AXR SET (OLD MODEL)

CHEEFT NUMBER: CHS1005

NR	CHEEFT NR	DESCRIPTIONS	QTY
1	1040	CALIPER GUIDES & SEALS REPAIR KIT	1
2	1029	CALIPER ADJUSTING MECHANISM	1
3	1030	CALIPER ADJUSTING SHAFT (WITH SPRING)	1
4	1032	CALIPER BRIDGE ASSEMBLY	1
5	1031	CALIPER CHAIN (29 LINKS)	1
6	1005	CALIPER ROLLER BEARINGS	1
7	1008	CALIPER CALIBRATION BOLT	2
8	1016	PISTON & SEALS REPAIR KIT (Ø74 mm)	1

ORIGINAL PART NUMBERS,MARKS AND MODELS MENTIONED ARE ONLY FOR DESCRIPTION PURPOSES.

COHEEFT®
AIR DISC BRAKE CALIPER REPAIR KITS

KNR

SB7 RADIAL TYPE

Always the Best...

EAC CE UDEM JAS-ANZ ISO 9001 2015

COHEEFT®

AIR DISC BRAKE CALIPER REPAIR KITS

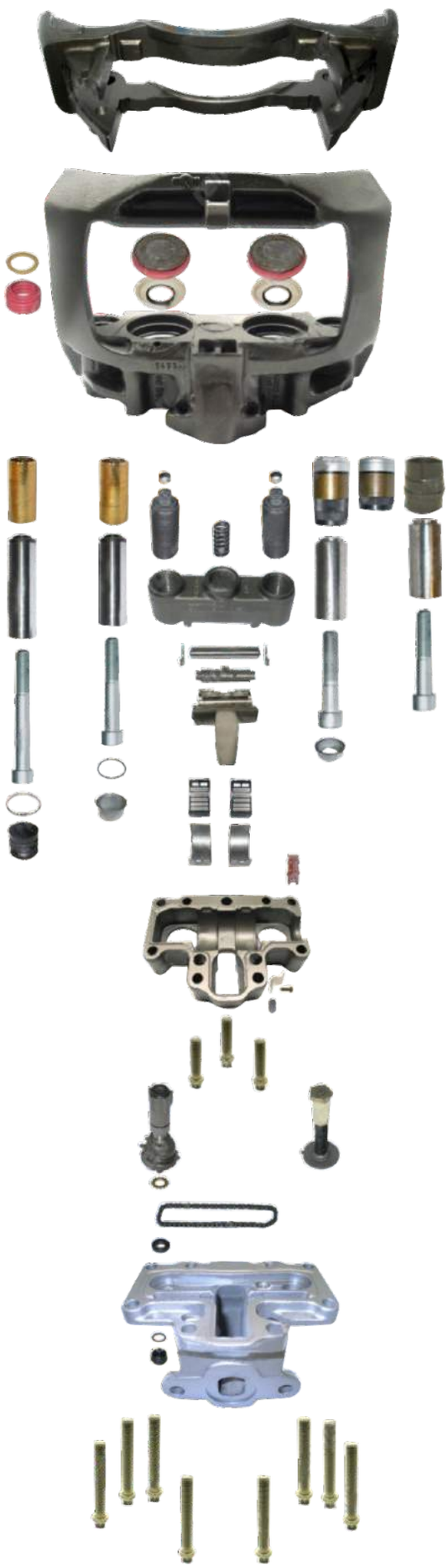

SB7 RADIAL

KNR

SB7 RADIAL TYPE

Always the Best...

EAC CE UDEM JAS-ANZ ISO 9001 2015

SB7 RADIAL TYPE

CHEEFT NUMBER	1002

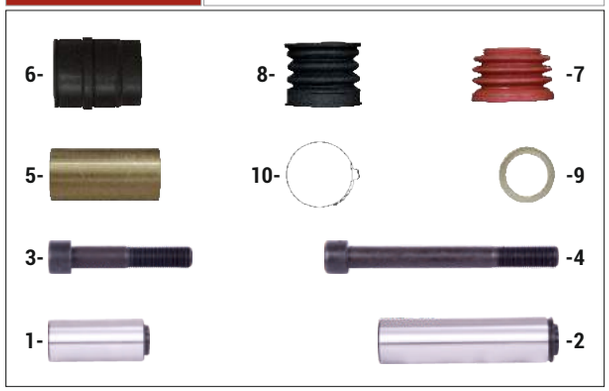

Caliper Guides & Seals Repair Kit

OEM NUMBER	II369100062 - II339680062 - MB 000 420 1282 MN 81.50822.6009 - SCN 1390427 - 2121643 DF 1142142-1198153 -1198154 -1448915 NEOPLAN 11015565 - IVECO 93162048

NR	CHEEFT NR	DESCRIPTIONS	DIMENSION	QTY
1	1502	GUIDE PIN	Ø34 x 80 mm	1
2	1507	GUIDE PIN	Ø36 x 145 mm	1
3	1514	BOLT	M16 x 1,5 x 87 mm	1
4	1518	BOLT	M16 x 1,5 x 150 mm	1
5	1521	BRONZE BUSH	Ø40 x Ø36 x 82 mm	1
6	1525	RUBBER BUSH		1
7	1531	INNER BOOT		1
8	1532	OUTER BOOT		1
9	1551	INNER BOOT RING		1
10	1552	OUTER BOOT CLAMP		1

CHEEFT NUMBER	1003

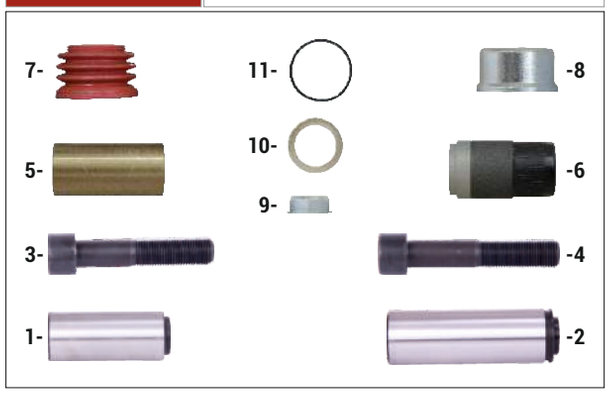

Caliper Guides & Seals Repair Kit

OEM NUMBER	K001532 - SCN 1472919 B.V 09.801.06.31.0

NR	CHEEFT NR	DESCRIPTIONS	DIMENSION	QTY
1	1501	GUIDE PIN	Ø32 x 80 mm	1
2	1505	GUIDE PIN	Ø36 x 113,70 mm	1
3	1513	BOLT	M16 x 1,5 x 80 mm	1
4	1514	BOLT	M16 x 1,5 x 87 mm	1
5	1521	BRONZE BUSH	Ø40 x Ø36 x 82 mm	1
6	1524	METAL-RUBBER BUSH	Ø35 mm (metal end)	1
7	1531	INNER BOOT		1
8	1541	STEEL CAP	Ø50 x 28 mm	1
9	1542	STEEL CAP	Ø26 x 11,5 mm	1
10	1551	INNER BOOT RING		1
11	1553	O-RING		1

CHEEFT NUMBER	1017

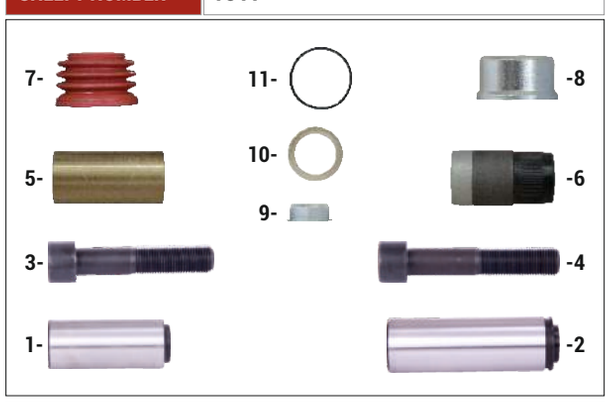

Caliper Guides & Seals Repair Kit

OEM NUMBER	K000375 - MB 000 420 2982 - IVECO 42538002 B.V 09.801.06.24.0 - MN 81.50822.6023

NR	CHEEFT NR	DESCRIPTIONS	DIMENSION	QTY
1	1501	GUIDE PIN	Ø32 x 80 mm	1
2	1505	GUIDE PIN	Ø36 x 113,70 mm	1
3	1513	BOLT	M16 x 1,5 x 80 mm	1
4	1514	BOLT	M16 x 1,5 x 87 mm	1
5	1521	BRONZE BUSH	Ø40 x Ø36 x 82 mm	1
6	1522	METAL-RUBBER BUSH	Ø39 mm (metal end)	1
7	1531	INNER BOOT		1
8	1541	STEEL CAP	Ø50 x 28 mm	1
9	1542	STEEL CAP	Ø26 x 11,5 mm	1
10	1551	INNER BOOT RING		1
11	1553	O-RING		1

ORIGINAL PART NUMBERS,MARKS AND MODELS MENTIONED ARE ONLY FOR DESCRIPTION PURPOSES.

SB7 RADIAL TYPE

CHEEFT NUMBER	1022

Caliper Guide & Seals Repair Kit

OEM NUMBER	K000935 - SF 3 434 3802 00

NR	CHEEFT NR	DESCRIPTIONS	DIMENSION	QTY
1	1507	GUIDE PIN	Ø36 x 145 mm	1
2	1518	BOLT	M16 x 1,5 x 150 mm	1
3	1521	BRONZE BUSH	Ø40 x Ø36 x 82 mm	1
4	1531	INNER BOOT		1
5	1532	OUTER BOOT		1
6	1551	INNER BOOT RING		1
7	1552	OUTER BOOT CLAMP		1

CHEEFT NUMBER	1023

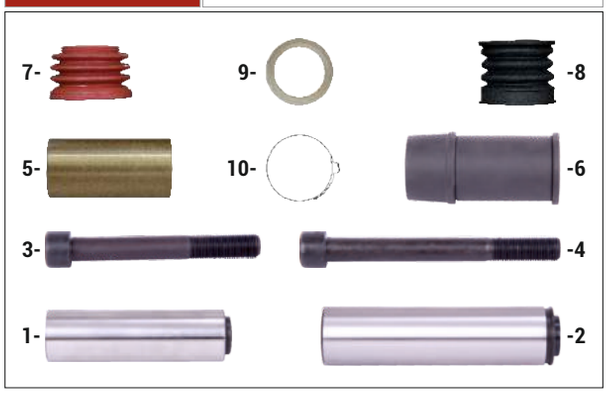

Caliper Guide & Seals Repair Kit

OEM NUMBER	II358510062 - MB 000 420 1182 - 050 121 1047 SCN 1415149 - 1415154 - 1415515

NR	CHEEFT NR	DESCRIPTIONS	DIMENSION	QTY
1	1503	GUIDE PIN	Ø34 x 120 mm	1
2	1507	GUIDE PIN	Ø36 x 145 mm	1
3	1516	BOLT	M16 x 1,5 x 125 mm	1
4	1518	BOLT	M16 x 1,5 x 150 mm	1
5	1521	BRONZE BUSH	Ø40 x Ø36 x 82 mm	1
6	1526	RUBBER BUSH	Ø40 x Ø34 x 95 mm	1
7	1531	INNER BOOT		1
8	1532	OUTER BOOT		1
9	1551	INNER BOOT RING		1
10	1552	OUTER BOOT CLAMP		1

CHEEFT NUMBER	1024

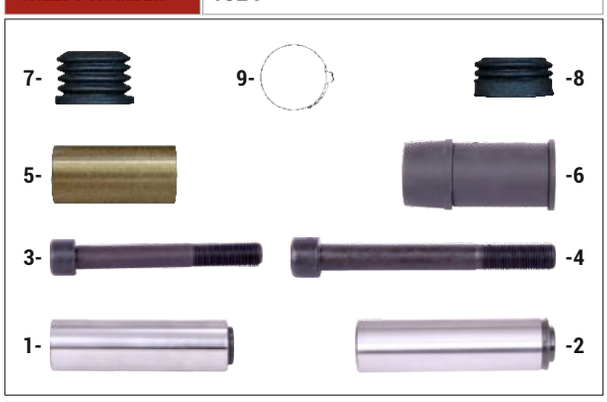

Caliper Guide & Seals Repair Kit

OEM NUMBER	II179320062 - MB 050 121 0167 - DF B230397

NR	CHEEFT NR	DESCRIPTIONS	DIMENSION	QTY
1	1503	GUIDE PIN	Ø34 x 120 mm	1
2	1506	GUIDE PIN	Ø36 x 135 mm	1
3	1516	BOLT	M16 x 1,5 x 125 mm	1
4	1517	BOLT	M16 x 1,5 x 140 mm	1
5	1521	BRONZE BUSH	Ø40 x Ø36 x 82 mm	1
6	1526	RUBBER BUSH	Ø40 x Ø34 x 95 mm	1
7	1539	INNER BOOT		1
8	1540	OUTER BOOT (SHORT)		1
9	1552	OUTER BOOT CLAMP		1

ORIGINAL PART NUMBERS,MARKS AND MODELS MENTIONED ARE ONLY FOR DESCRIPTION PURPOSES.

SB7 RADIAL TYPE

CHEEFT NUMBER	1025

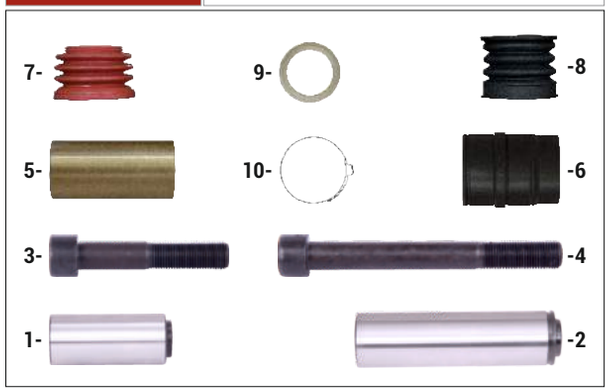

Caliper Guides & Seals Repair Kit

OEM NUMBER	K000132 - MB 000 420 1082 - 000 420 2182 SCN 1390426 - 1798063 - 2121644

NR	CHEEFT NR	DESCRIPTIONS	DIMENSION	QTY
1	1502	GUIDE PIN	Ø34 x 80 mm	1
2	1506	GUIDE PIN	Ø36 x 135 mm	1
3	1514	BOLT	M16 x 1,5 x 87 mm	1
4	1517	BOLT	M16 x 1,5 x 140 mm	1
5	1521	BRONZE BUSH	Ø40 x Ø36 x 82 mm	1
6	1525	RUBBER BUSH		1
7	1531	INNER BOOT		1
8	1532	OUTER BOOT		1
9	1551	INNER BOOT RING		1
10	1552	OUTER BOOT CLAMP		1

CHEEFT NUMBER	1027

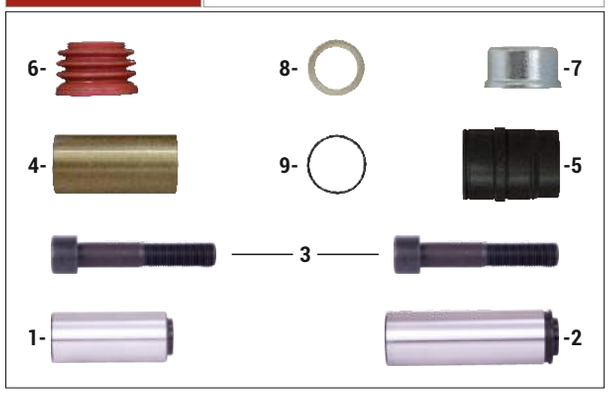

Caliper Guides & Seals Repair Kit

OEM NUMBER	II39769F0062 - SCN 2121645 IVECO 42537451

NR	CHEEFT NR	DESCRIPTIONS	DIMENSION	QTY
1	1502	GUIDE PIN	Ø34 x 80 mm	1
2	1505	GUIDE PIN	Ø36 x 113,70 mm	1
3	1514	BOLT	M16 x 1,5 x 87 mm	2
4	1521	BRONZE BUSH	Ø40 x Ø36 x 82 mm	1
5	1525	RUBBER BUSH		1
6	1531	INNER BOOT		1
7	1541	STEEL CAP	Ø50 x 28 mm	1
8	1551	INNER BOOT RING		1
9	1553	O-RING		1

CHEEFT NUMBER	1050

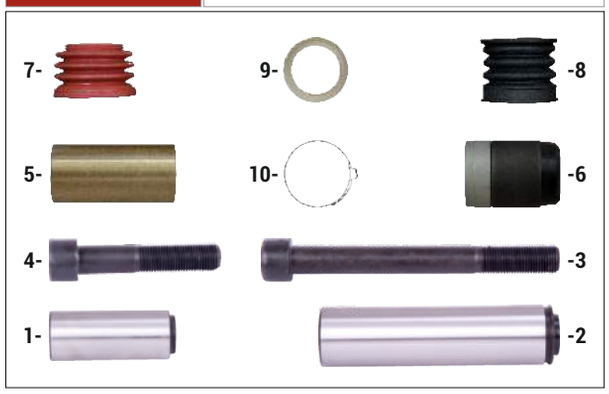

Caliper Guides & Seals Repair Kit

OEM NUMBER	K000687 - DF 1603326

NR	CHEEFT NR	DESCRIPTIONS	DIMENSION	QTY
1	1501	GUIDE PIN	Ø32 x 80 mm	1
2	1507	GUIDE PIN	Ø36 x 145 mm	1
3	1518	BOLT	M16 x 1,5 x 150 mm	1
4	1513	BOLT	M16 x 1,5 x 80 mm	1
5	1521	BRONZE BUSH	Ø40 x Ø36 x 82 mm	1
6	1523	METAL-RUBBER BUSH (SHORT)	Ø39 mm (metal end)	1
7	1531	INNER BOOT		1
8	1532	OUTER BOOT		1
9	1551	INNER BOOT RING		1
10	1552	OUTER BOOT CLAMP		1

ORIGINAL PART NUMBERS,MARKS AND MODELS MENTIONED ARE ONLY FOR DESCRIPTION PURPOSES.

SB7 RADIAL TYPE

CHEEFT NUMBER	1061

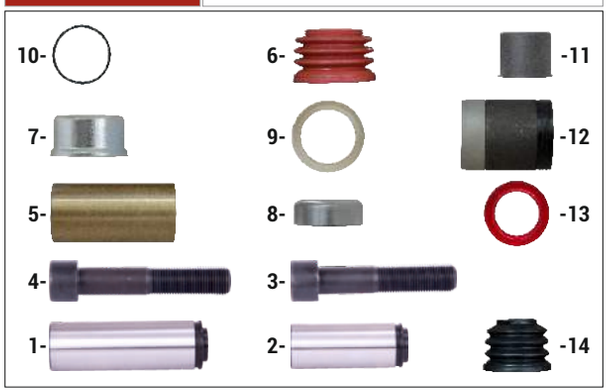

Caliper Guides & Seals Repair Kit

OEM NUMBER	K031844K50 - K011117 SCN 1756390 - 1906779

NR	CHEEFT NR	DESCRIPTIONS	DIMENSION	QTY
1	1505	GUIDE PIN	Ø36 x 113,70 mm	1
2	1510	GUIDE PIN	Ø32 x 84 mm	1
3	1513	BOLT	M16 x 1,5 x 80 mm	1
4	1514	BOLT	M16 x 1,5 x 87 mm	1
5	1521	BRONZE BUSH	Ø40 x Ø36 x 82 mm	1
6	1531	INNER BOOT		1
7	1541	STEEL CAP	Ø50 x 28 mm	1
8	1543	STEEL CAP	Ø40 x 14,5 mm	1
9	1551	INNER BOOT RING		1
10	1553	O-RING		1
11	1577	STEEL CAP	Ø42,5 x 37 mm	1
12	1578	METAL-RUBBER BUSH (SHORT)	Ø39 mm (metal end)	1
13	1579	INNER BOOT RING		1
14	1580	INNER BOOT		1

CHEEFT NUMBER	1181

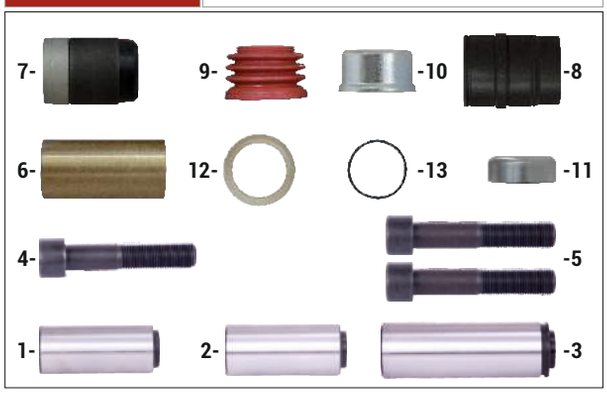

Caliper Guides & Seals Repair Kit

OEM NUMBER	K000365 - MB 000 420 0782 - 000 420 2282

NR	CHEEFT NR	DESCRIPTIONS	DIMENSION	QTY
1	1501	GUIDE PIN	Ø32 x 80 mm	1
2	1502	GUIDE PIN	Ø34 x 80 mm	1
3	1505	GUIDE PIN	Ø36 x 113,70 mm	1
4	1513	BOLT	M16 x 1,5 x 80 mm	1
5	1514	BOLT	M16 x 1,5 x 87 mm	2
6	1521	BRONZE BUSH	Ø40 x Ø36 x 82 mm	1
7	1523	METAL RUBBER BUSH (SHORT)	Ø39 mm (metal end)	1
8	1525	RUBBER BUSH		1
9	1531	INNER BOOT		1
10	1541	STEEL CAP	Ø50 x 28 mm	1
11	1543	STEEL CAP	Ø40 x 14,5 mm	1
12	1551	INNER BOOT RING		1
13	1553	O-RING		1

CHEEFT NUMBER	1184

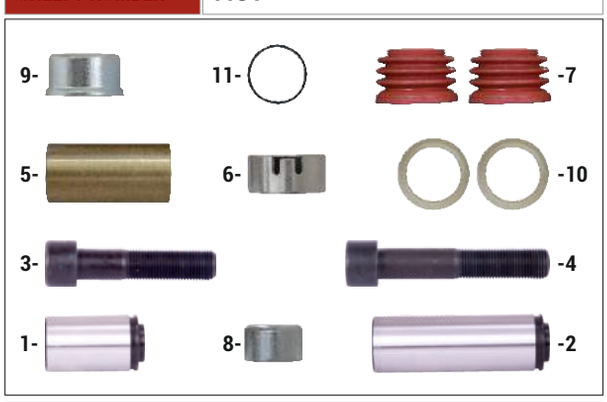

Caliper Guide & Seals Repair Kit

OEM NUMBER	K010813 - MN 81.50822.6033

NR	CHEEFT NR	DESCRIPTIONS	DIMENSION	QTY
1	1504	GUIDE PIN	Ø36 x 64 mm	1
2	1505	GUIDE PIN	Ø36 x 113,70 mm	1
3	1511	BOLT	M16 x 1,5 x 70 mm	1
4	1514	BOLT	M16 x 1,5 x 87 mm	1
5	1521	BRONZE BUSH	Ø40 x Ø36 x 82 mm	1
6	1527	SLOTTED BUSH	Ø40 x Ø36 x 20 mm	1
7	1531	INNER BOOT		2
8	1544	STEEL CAP	Ø40 x 25 mm	1
9	1541	STEEL CAP	Ø50 x 28 mm	1
10	1551	INNER BOOT RING		2
11	1553	O-RING		1

ORIGINAL PART NUMBERS,MARKS AND MODELS MENTIONED ARE ONLY FOR DESCRIPTION PURPOSES.

SB7 RADIAL TYPE

CHEEFT NUMBER	1192

Caliper Guides & Seals Repair Kit

OEM NUMBER	II328090062 - SCN 2121642 - B.V 09.801.02.58.0 09.801.02.88.0 - SF 8 531 7002 100 - 8 531 7002 200

NR	CHEEFT NR	DESCRIPTIONS	DIMENSION	QTY
1	1502	GUIDE PIN	Ø34 x 80 mm	1
2	1507	GUIDE PIN	Ø36 x 145 mm	1
3	1513	BOLT	M16 x 1,5 x 80 mm	1
4	1518	BOLT	M16 x 1,5 x 150 mm	1
5	1521	BRONZE BUSH	Ø40 x Ø36 x 82 mm	1
6	1525	RUBBER BUSH		1
7	1531	INNER BOOT		1
8	1532	OUTER BOOT		1
9	1551	INNER BOOT RING		1
10	1552	OUTER BOOT CLAMP		1

CHEEFT NUMBER	1198

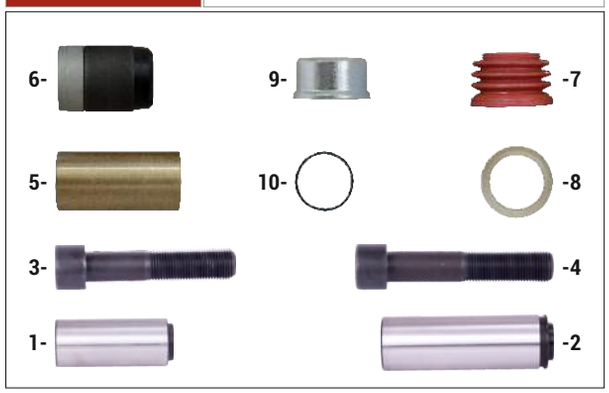

Caliper Guides & Seals Repair Kit

OEM NUMBER	K048371K50 - MN 81.50822.6036 SCN 2121648

NR	CHEEFT NR	DESCRIPTIONS	DIMENSION	QTY
1	1501	GUIDE PIN	Ø32 x 80 mm	1
2	1505	GUIDE PIN	Ø36 x 113,70 mm	1
3	1513	BOLT	M16 x 1,5 x 80 mm	1
4	1514	BOLT	M16 x 1,5 x 87 mm	1
5	1521	BRONZE BUSH	Ø40 x Ø36 x 82 mm	1
6	1523	METAL-RUBBER BUSH (SHORT)	Ø39 mm (metal end)	1
7	1531	INNER BOOT		1
8	1551	INNER BOOT RING		1
9	1541	STEEL CAP	Ø50 x 28 mm	1
10	1553	O-RING		1

CHEEFT NUMBER	1195

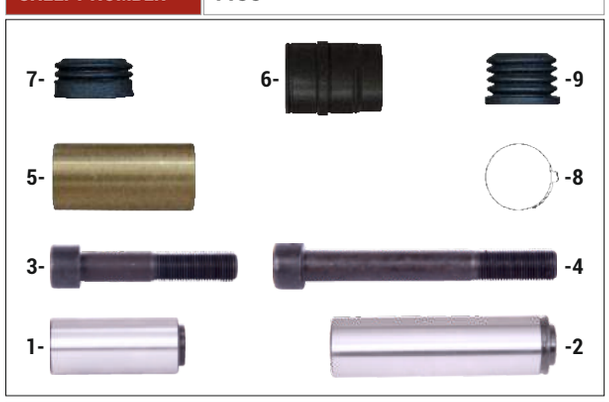

Caliper Guides & Seals Repair Kit

OEM NUMBER	II197330062

NR	CHEEFT NR	DESCRIPTIONS	DIMENSION	QTY
1	1502	GUIDE PIN	Ø34 x 80 mm	1
2	1506	GUIDE PIN	Ø36 x 135 mm	1
3	1514	BOLT	M16 x 1,5 x 87 mm	1
4	1517	BOLT	M16 x 1,5 x 140 mm	1
5	1521	BRONZE BUSH	Ø40 x Ø36 x 82 mm	1
6	1525	RUBBER BUSH		1
7	1540	OUTER BOOT (SHORT)		1
8	1552	OUTER BOOT CLAMP		1
9	1539	INNER BOOT		1

ORIGINAL PART NUMBERS,MARKS AND MODELS MENTIONED ARE ONLY FOR DESCRIPTION PURPOSES.

SB7 RADIAL TYPE

CHEEFT NUMBER	1203

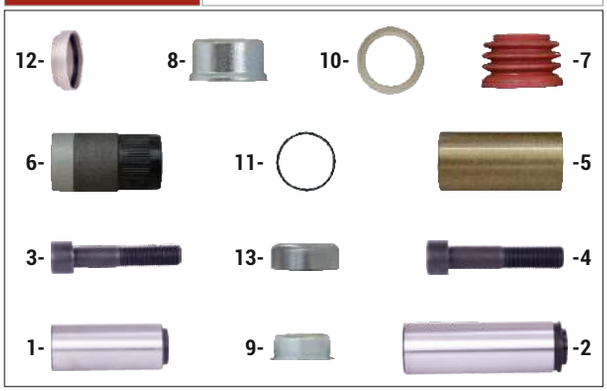

Caliper Guides & Seals Repair Kit

OEM NUMBER	K067417K50 - SCN 2064260 - 2292232 SF 3 434 3820 00

NR	CHEEFT NR	DESCRIPTIONS	DIMENSION	QTY
1	1501	GUIDE PIN	Ø32 x 80 mm	1
2	1505	GUIDE PIN	Ø36 x 113,70 mm	1
3	1513	BOLT	M16 x 1,5 x 80 mm	1
4	1514	BOLT	M16 x 1,5 x 87 mm	1
5	1521	BRONZE BUSH	Ø40 x Ø36 x 82 mm	1
6	1522	METAL RUBBER BUSH	Ø39 mm (metal end)	1
7	1531	INNER BOOT		1
8	1541	STEEL CAP	Ø50 x 28 mm	1
9	1542	STEEL CAP	Ø26 x 11,5 mm	1
10	1551	INNER BOOT RING		1
11	1553	O-RING		1
12	1617	METAL OF RUBBER BUSH	Ø35 mm	1
13	1543	STEEL CAP	Ø40 x 14,5 mm	1

CHEEFT NUMBER	1018

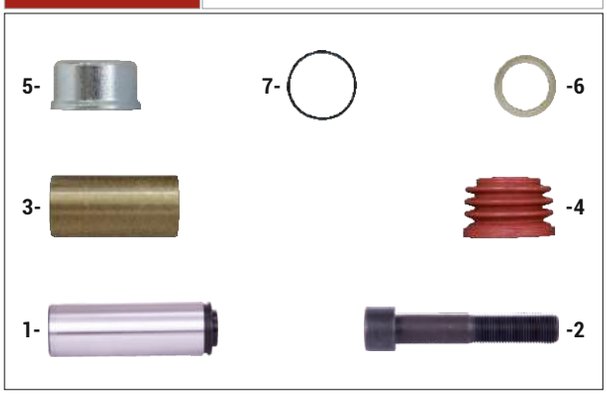

Caliper Guide & Seals Repair Kit

OEM NUMBER	K000696 - II310370066 - MB 002 420 0383 SF 3 434 3805 00

NR	CHEEFT NR	DESCRIPTIONS	DIMENSION	QTY
1	1505	GUIDE PIN	Ø36 x 113,70 mm	1
2	1514	BOLT	M16 x 1,5 x 87 mm	1
3	1521	BRONZE BUSH	Ø40 x Ø36 x 82 mm	1
4	1531	INNER BOOT		1
5	1541	STEEL CAP	Ø50 x 28 mm	1
6	1551	INNER BOOT RING		1
7	1553	O-RING		1

CHEEFT NUMBER	1205

Caliper Guide Repair Kit

OEM NUMBER	K000698 - B.V 09.801.06.90.0

NR	CHEEFT NR	DESCRIPTIONS	DIMENSION	QTY
1	1501	GUIDE PIN	Ø32 x 80 mm	1
2	1513	BOLT	M16 x 1,5 x 80 mm	1
3	1524	METAL-RUBBER BUSH	Ø35 mm (metal end)	1
4	1542	STEEL CAP	Ø26 x 11,5 mm	1

ORIGINAL PART NUMBERS,MARKS AND MODELS MENTIONED ARE ONLY FOR DESCRIPTION PURPOSES.

SB7 RADIAL TYPE

CHEEFT NUMBER	1193

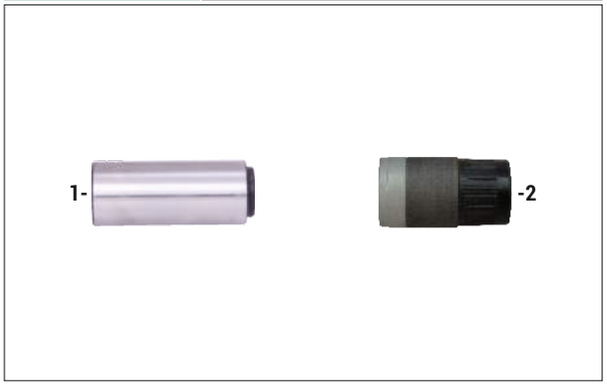

Caliper Guide Repair Kit

OEM NUMBER	K000697

NR	CHEEFT NR	DESCRIPTIONS	DIMENSION	QTY
1	1501	GUIDE PIN	Ø32 x 80 mm	1
2	1522	METAL RUBBER BUSH	Ø39 mm (metal end)	1

CHEEFT NUMBER	1090

Caliper Guide Repair Kit

OEM NUMBER	

NR	CHEEFT NR	DESCRIPTIONS	DIMENSION	QTY
1	1501	GUIDE PIN	Ø32 x 80 mm	1
2	1513	BOLT	M16 x 1,5 x 80 mm	1
3	1523	METAL-RUBBER BUSH (SHORT VERSION)	Ø39 mm (metal end)	1

CHEEFT NUMBER	1006

Caliper Rubber Bush & Guide Repair Kit

OEM NUMBER	II368470064 - DF 1448910 - SF 3 434 3801 00 SCN 2121840

NR	CHEEFT NR	DESCRIPTIONS	DIMENSION	QTY
1	1502	GUIDE PIN	Ø34 x 80 mm	1
2	1514	BOLT	M16 x 1,5 x 87 mm	1
3	1525	RUBBER BUSH		1

ORIGINAL PART NUMBERS,MARKS AND MODELS MENTIONED ARE ONLY FOR DESCRIPTION PURPOSES.

SB7 RADIAL TYPE

CHEEFT NUMBER	1026

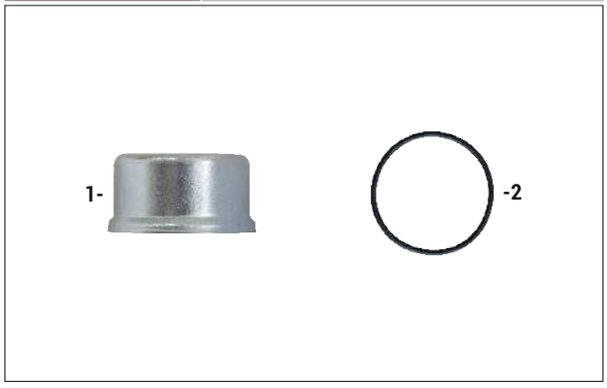

Caliper Steel Cap Repair Kit

OEM NUMBER	II39769F0063 - SF 3 434 3806 00

NR	CHEEFT NR	DESCRIPTIONS	DIMENSION	QTY
1	1541	STEEL CAP	Ø50 x 28 mm	1
2	1553	O-RING		1

CHEEFT NUMBER	1194

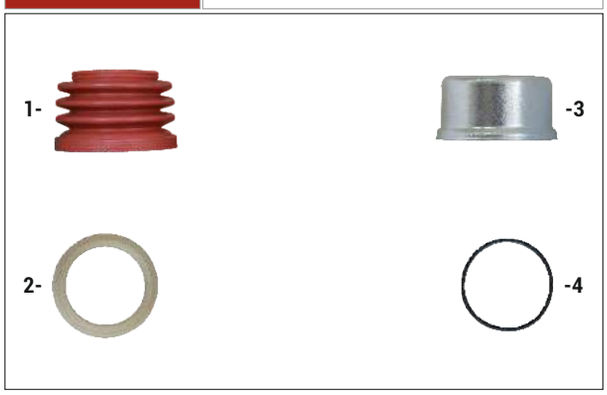

Boots & Cap Repair Kit

OEM NUMBER	II328090061 - MB 001 420 5283 - DF 1448914 SCN 1415150 - MN 81.50822.6008 IVECO 93162049 - B.V 09.801.06.11.0

NR	CHEEFT NR	DESCRIPTIONS	DIMENSION	QTY
1	1541	STEEL CAP	Ø50 x 28 mm	1
2	1553	O-RING		1
3	1531	INNER BOOT		1
4	1551	INNER BOOT RING		1

CHEEFT NUMBER	1004

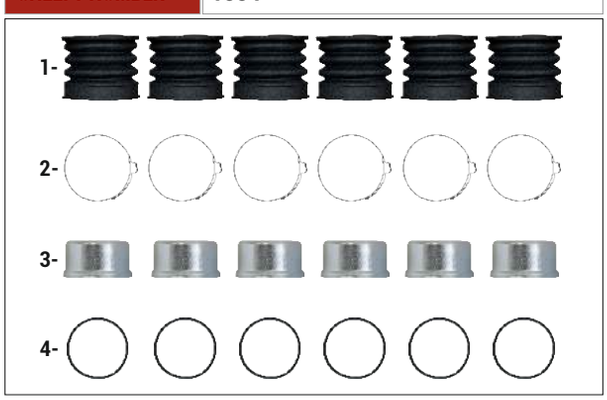

Caliper Outer Boots & Steel Caps

OEM NUMBER	K001301 - MN 81.50822.6025 SCN 1439494 - 2121839

NR	CHEEFT NR	DESCRIPTIONS	DIMENSION	QTY
1	1532	OUTER BOOT		6
2	1552	OUTER BOOT CLAMP		6
3	1541	STEEL CAP	Ø50 x 28 mm	6
4	1553	O-RING		6

ORIGINAL PART NUMBERS,MARKS AND MODELS MENTIONED ARE ONLY FOR DESCRIPTION PURPOSES.

SB7 RADIAL TYPE

CHEEFT NUMBER	1202

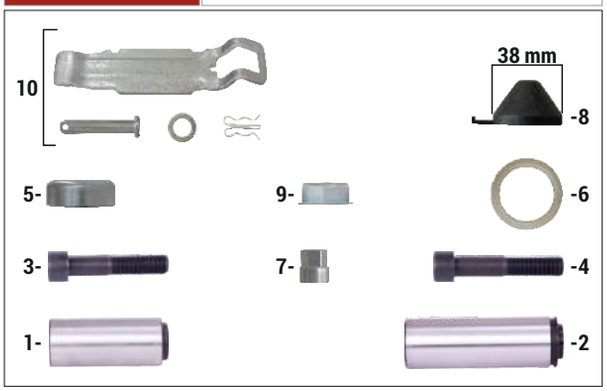

NR	CHEEFT NR	DESCRIPTIONS	DIMENSION	QTY
1	1501	GUIDE PIN	Ø32 x 80 mm	1
2	1505	GUIDE PIN	Ø36 x 113,70 mm	1
3	1513	BOLT	M16 x 1,5 x 80 mm	1
4	1514	BOLT	M16 x 1,5 x 87 mm	1
5	1543	STEEL CAP	Ø40 x 14,5 mm	1
6	1551	INNER BOOT RING		1
7	1563	ADJUSTING MECHANISM ADAPTER		1
8	1557	PLASTIC COVER CAP	Ø38 mm	1
9	1542	STEEL CAP	Ø26 x 11,5 mm	1
10	1060	CALIPER PAD RETAINER REPAIR KIT		1

Caliper Guides & Cap Repair Kit

OEM NUMBER	K003800

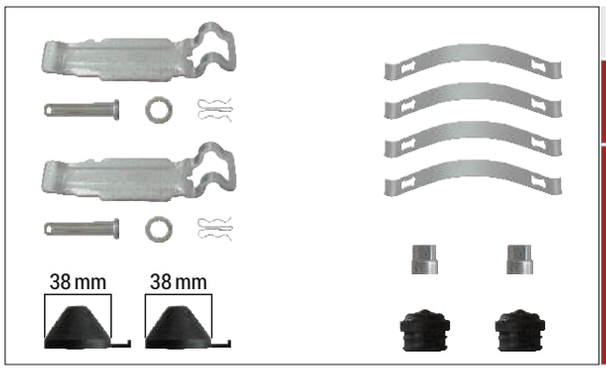

Caliper Pad Retainer Repair Kit

CHEEFT NUMBER	1051
OEM NUMBER	

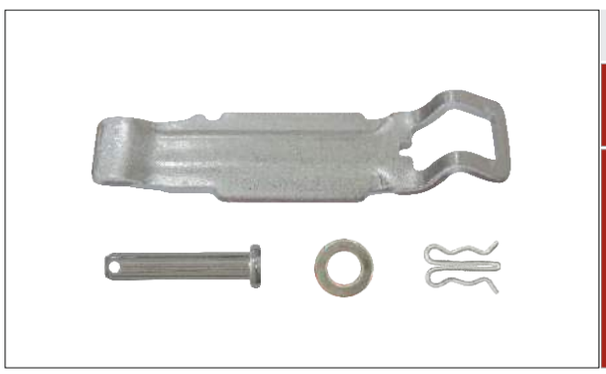

Caliper Pad Retainer Repair Kit

CHEEFT NUMBER	1060
OEM NUMBER	II19712004 - II30679004 - II197120061 K000129 - MB 000 420 2682 SAF 8 531 7002 600

Caliper Roller Bearings

CHEEFT NUMBER	1005
OEM NUMBER	

ORIGINAL PART NUMBERS,MARKS AND MODELS MENTIONED ARE ONLY FOR DESCRIPTION PURPOSES.

SB7 RADIAL TYPE

CHEEFT NUMBER	1015

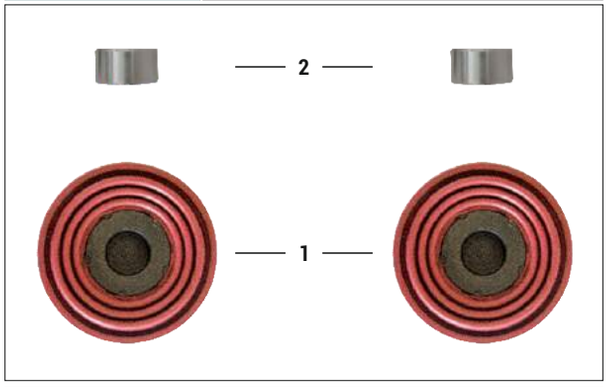

Caliper Piston Tappet Repair Kit

OEM NUMBER	II179320065 - II304130065 SCN 1390429

NR	CHEEFT NR	DESCRIPTIONS	DIMENSION	QTY
1	1533	TAPPET & BOOT ASSEMBLY	Ø74 mm	2
2	1520	TAPPET BUSH	Ø18 x Ø16 x 10 mm	2

CHEEFT NUMBER	1016

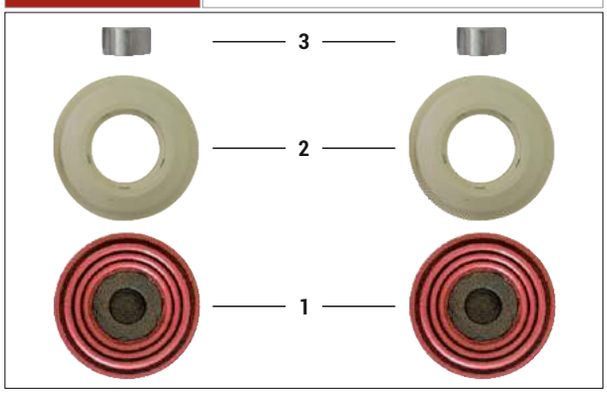

Caliper Piston Tappet & Seals Repair Kit

OEM NUMBER	K000944 - K010604 - MB 000 420 0682 - 000 420 3982 - 000 420 4882 - MN 81.50822.6007 - 81.50822.6022 - 81.50822.6032 SCN 1743421 - 1746824 - 1756389 - 1759811 - 1723414 - 2121859 - DF 1448913 - 1623221 - IVECO 93162050 - B.V 09.801.02.63.0 SF 3 434 3804 00 - 8 531 7002 800

NR	CHEEFT NR	DESCRIPTIONS	DIMENSION	QTY
1	1533	TAPPET & BOOT ASSEMBLY	Ø74 mm	2
2	1537	INNER SEAL		2
3	1520	TAPPET BUSH	Ø18 x Ø16 x 10 mm	2

CHEEFT NUMBER	1151

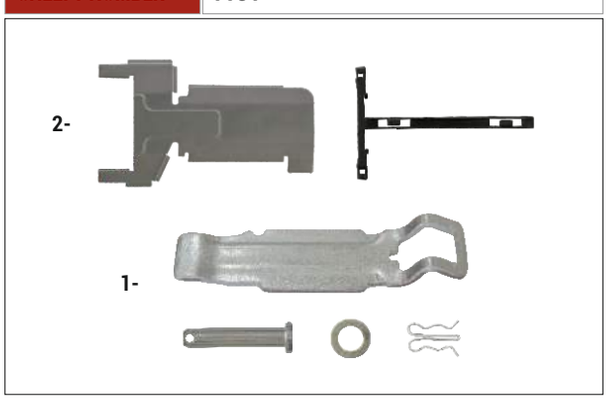

Brake Pad Retainer Repair Kit

OEM NUMBER	K000884

NR	CHEEFT NR	DESCRIPTIONS	DIMENSION	QTY
1	1060	PAD RETAINER REPAIR KIT		1
2	1148	CABLO PROTECTION KIT		1

ORIGINAL PART NUMBERS,MARKS AND MODELS MENTIONED ARE ONLY FOR DESCRIPTION PURPOSES.

SB7 RADIAL TYPE

Caliper Calibration Bolt	
CHEEFT NUMBER	1008
OEM NUMBER	

Caliper Chain (29 links)	
CHEEFT NUMBER	1031
OEM NUMBER	

Caliper Adjusting Mechanism	
CHEEFT NUMBER	1029
OEM NUMBER	

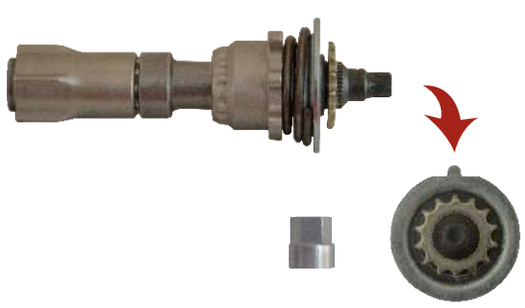

Caliper Adjusting Mechanism (Orig. Type)	
CHEEFT NUMBER	1209
OEM NUMBER	

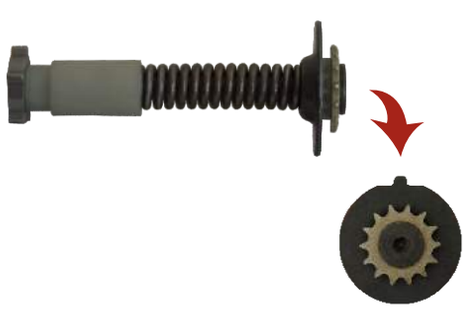

Caliper Adjusting Shaft (With Spring)	
CHEEFT NUMBER	1030
OEM NUMBER	

ORIGINAL PART NUMBERS,MARKS AND MODELS MENTIONED ARE ONLY FOR DESCRIPTION PURPOSES.

SB7 RADIAL TYPE

CHEEFT NUMBER	1201

Caliper Adjusting Mechanisms Kit

OEM NUMBER	

NR	CHEEFT NR	DESCRIPTIONS	DIMENSION	QTY
1	1029	ADJUSTING MECHANISM		1
2	1030	ADJUSTING SHAFT (WITH SPRING)		1
3	1031	CHAIN (29 LINKS)		1

CHEEFT NUMBER	1010

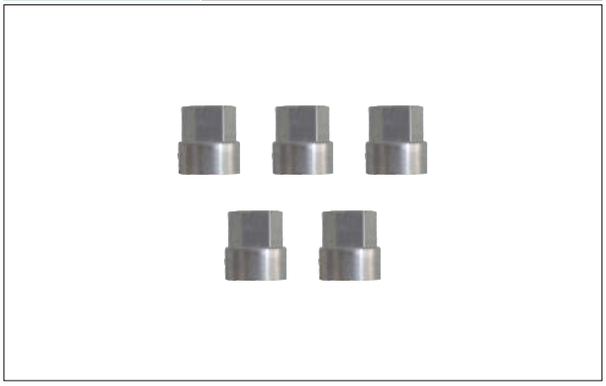

Caliper Adjusting Mechanism Adapter Kit

OEM NUMBER	Z001548 - HNDRCKSN S-29152-5

NR	CHEEFT NR	DESCRIPTIONS	DIMENSION	QTY
1	1563	MECHANISM ADAPTER		5

CHEEFT NUMBER	1099

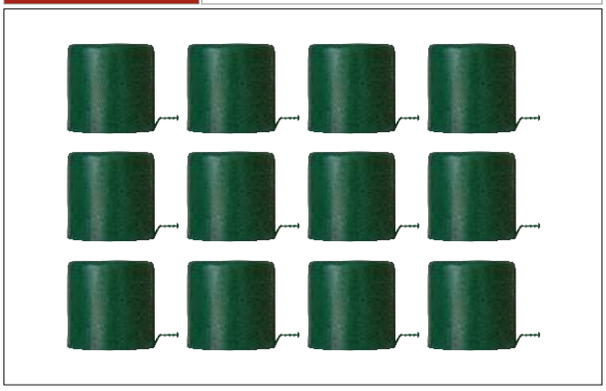

Rubber Bush Cap Kit (Long)

OEM NUMBER	

NR	CHEEFT NR	DESCRIPTIONS	DIMENSION	QTY
1	1662	RUBBER BUSH CAP (LONG)		12

ORIGINAL PART NUMBERS,MARKS AND MODELS MENTIONED ARE ONLY FOR DESCRIPTION PURPOSES.

SB7 RADIAL TYPE

CHEEFT NUMBER	1011

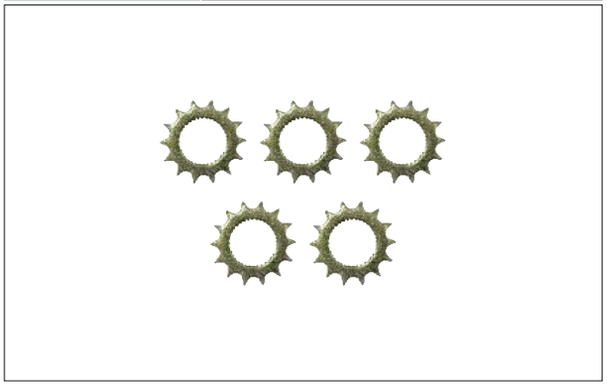

Caliper Adjusting Mechanism Wheel Kit

OEM NUMBER	

NR	CHEEFT NR	DESCRIPTIONS	DIMENSION	QTY
1	1564	ADJUSTING MECHANISM WHEEL		5

CHEEFT NUMBER	1032

Caliper Bridge Assembly

OEM NUMBER	

NR	CHEEFT NR	DESCRIPTIONS	DIMENSION	QTY
1	1571	SPRING	Ø25 x 49 mm	1
2	1591	BRIDGE ASSEMBLY		1

CHEEFT NUMBER	1182

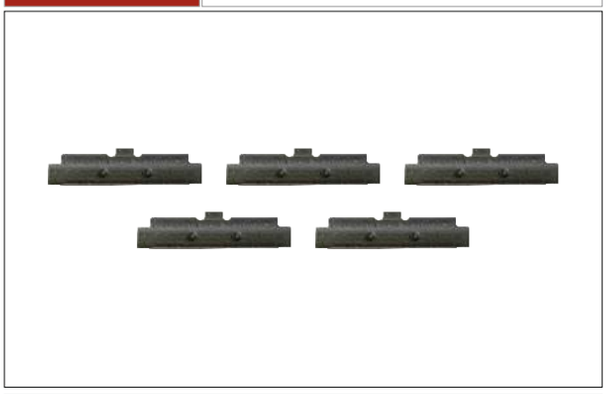

Caliper Lever Bearing Kit

OEM NUMBER	

NR	CHEEFT NR	DESCRIPTIONS	DIMENSION	QTY
1	1597	CALIPER LEVER BEARING		5

ORIGINAL PART NUMBERS,MARKS AND MODELS MENTIONED ARE ONLY FOR DESCRIPTION PURPOSES.

SB7 RADIAL TYPE

Caliper Roller Bearings

CHEEFT NUMBER	1168
OEM NUMBER	

Caliper Lever

CHEEFT NUMBER	1186
OEM NUMBER	K100259 - K000250 - SCN 1480809 - 1480810

Caliper Lever

CHEEFT NUMBER	1190
OEM NUMBER	MB BUS CITARO - MN BUS LIONS CITY A25 A26 A39 SCN BUS 3 4 SERIES - NEOPLAN CENTROLINER N4516 N4520 VANHOOL A308 A309 A330 AG330 AGG330 DNNS BUS ENVIRO 400 TRIDENT 2 OTHER: OPTARE OLYMPUS OMNIDEKKA EVOBUS CITYBUS A20 S3

CHEEFT NUMBER	1037

Caliper Sensor Cover (Without Sensor)

OEM NUMBER	

NR	CHEEFT NR	DESCRIPTIONS	DIMENSION	QTY
1	1566	PLASTIC COVER (WITH HOLE)		1
2	1575	SCREW WITH RIVET		3
3	1570	SENSOR COVER SEAL		1

ORIGINAL PART NUMBERS,MARKS AND MODELS MENTIONED ARE ONLY FOR DESCRIPTION PURPOSES.

SB7 RADIAL TYPE

CHEEFT NUMBER	1055

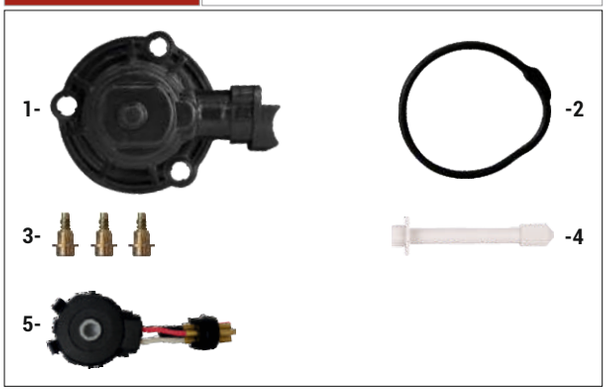

Caliper Sensor Cover (2 Cables Sensor)

OEM NUMBER	

NR	CHEEFT NR	DESCRIPTIONS	DIMENSION	QTY
1	1566	PLASTIC COVER (WITH HOLE)		1
2	1570	SENSOR COVER SEAL		1
3	1575	SCREW WITH RIVET		3
4	1567	SENSOR ROD		1
5	1547	2 CABLES SENSOR		1

CHEEFT NUMBER	1072

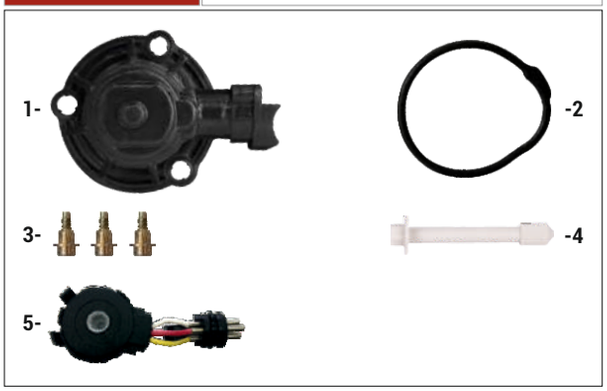

Caliper Sensor Cover (3 Cables Sensor)

OEM NUMBER	MB

NR	CHEEFT NR	DESCRIPTIONS	DIMENSION	QTY
1	1566	PLASTIC COVER (WITH HOLE)		1
2	1570	SENSOR COVER SEAL		1
3	1575	SCREW WITH RIVET		3
4	1567	SENSOR ROD		1
5	1587	3 CABLES SENSOR (FOR MB)		1

CHEEFT NUMBER	1081

Caliper Sensor Cover (3 Cables Sensor)

OEM NUMBER	MN

NR	CHEEFT NR	DESCRIPTIONS	DIMENSION	QTY
1	1566	PLASTIC COVER (WITH HOLE)		1
2	1570	SENSOR COVER SEAL		1
3	1575	SCREW WITH RIVET		3
4	1567	SENSOR ROD		1
5	1588	3 CABLES SENSOR (FOR MN)		1

ORIGINAL PART NUMBERS,MARKS AND MODELS MENTIONED ARE ONLY FOR DESCRIPTION PURPOSES.

SB7 RADIAL TYPE

CHEEFT NUMBER	1065

Caliper Sensor Cover (Without Sensor)

OEM NUMBER	

NR	CHEEFT NR	DESCRIPTIONS	DIMENSION	QTY
1	1584	PLASTIC COVER (WITH HOLE)		1
2	1570	SENSOR COVER SEAL		1
3	1575	SCREW WITH RIVET		3
4	1605	COVER CLIPS		1

CHEEFT NUMBER	1066

Caliper Sensor Cover (2 Cables Sensor)

OEM NUMBER	

NR	CHEEFT NR	DESCRIPTIONS	DIMENSION	QTY
1	1584	PLASTIC COVER (WITH HOLE)		1
2	1570	SENSOR COVER SEAL		1
3	1575	SCREW WITH RIVET		3
4	1605	COVER CLIPS		1
5	1547	2 CABLES SENSOR		1
6	1567	SENSOR ROD		1

CHEEFT NUMBER	1073

Caliper Sensor Cover (3 Cables Sensor)

OEM NUMBER	MB

NR	CHEEFT NR	DESCRIPTIONS	DIMENSION	QTY
1	1584	PLASTIC COVER (WITH HOLE)		1
2	1570	SENSOR COVER SEAL		1
3	1575	SCREW WITH RIVET		3
4	1605	COVER CLIPS		1
5	1587	3 CABLES SENSOR (FOR MB)		1
6	1567	SENSOR ROD		1

ORIGINAL PART NUMBERS,MARKS AND MODELS MENTIONED ARE ONLY FOR DESCRIPTION PURPOSES.

SB7 RADIAL TYPE

CHEEFT NUMBER	1082

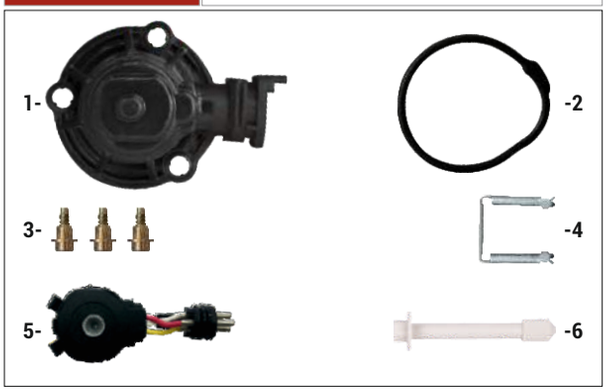

Caliper Sensor Cover (3 Cables Sensor)

OEM NUMBER	MN

NR	CHEEFT NR	DESCRIPTIONS	DIMENSION	QTY
1	1584	PLASTIC COVER (WITH HOLE)		1
2	1570	SENSOR COVER SEAL		1
3	1575	SCREW WITH RIVET		3
4	1605	COVER CLIPS		1
5	1588	3 CABLES SENSOR	FOR MN	1
6	1567	SENSOR ROD		1

CHEEFT NUMBER	1067

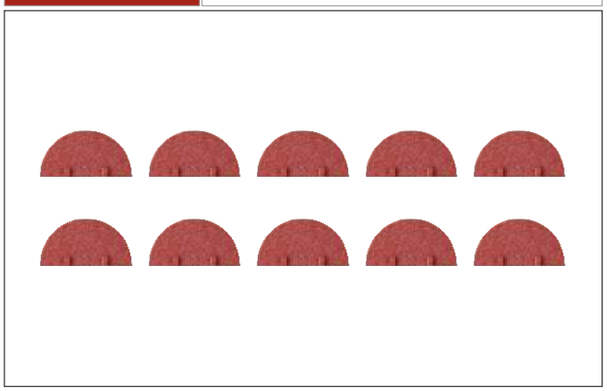

Caliper Support Seal Kit

OEM NUMBER	

NR	CHEEFT NR	DESCRIPTIONS	DIMENSION	QTY
1	1585	SUPPORT SEAL		10

CHEEFT NUMBER	1225

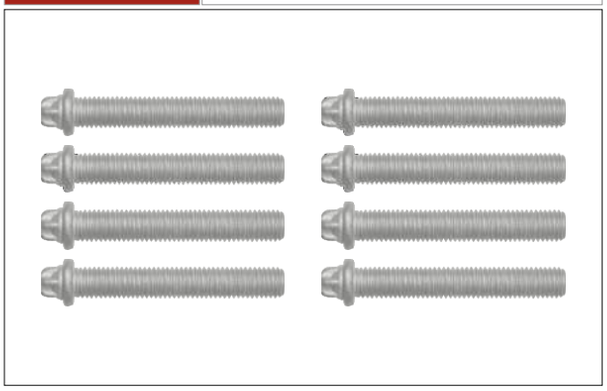

Cover Bolt Kit

OEM NUMBER	

NR	CHEEFT NR	DESCRIPTIONS	DIMENSION	QTY
1	1652	COVER BOLT	M12 x 1,75 x 80 mm	8

ORIGINAL PART NUMBERS,MARKS AND MODELS MENTIONED ARE ONLY FOR DESCRIPTION PURPOSES.

SB7 RADIAL TYPE

CHEEFT NUMBER	1226

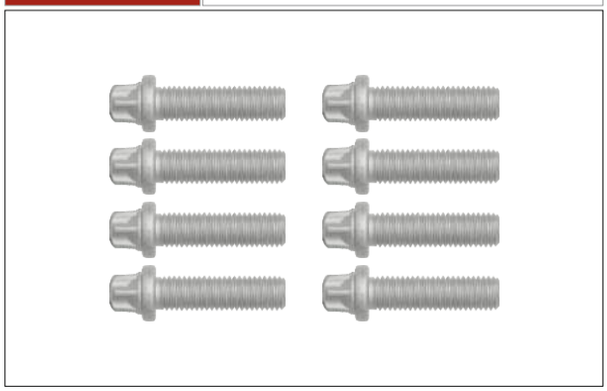

Cover Bolt Kit

OEM NUMBER	

NR	CHEEFT NR	DESCRIPTIONS	DIMENSION	QTY
1	1653	COVER BOLT	M14 x 2 x 52 mm	8

CHEEFT NUMBER	1227

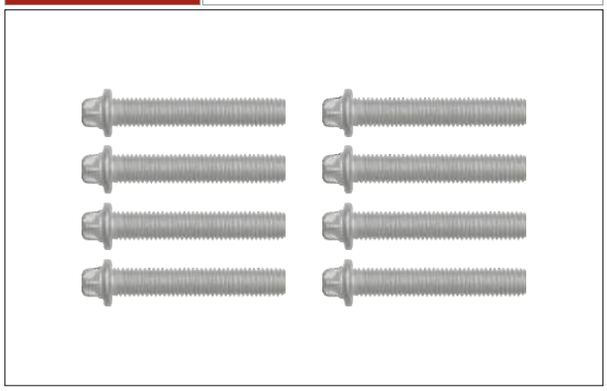

Cover Bolt Kit

OEM NUMBER	

NR	CHEEFT NR	DESCRIPTIONS	DIMENSION	QTY
1	1654	COVER BOLT	M10 x 1,5 x 60 mm	8

CHEEFT NUMBER	1204

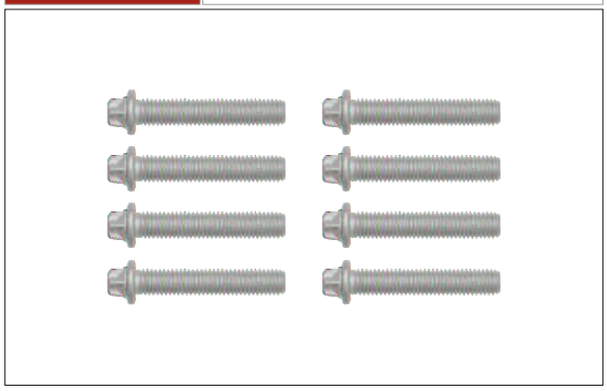

Cover Bolt Kit

OEM NUMBER	

NR	CHEEFT NR	DESCRIPTIONS	DIMENSION	QTY
1	1663	COVER BOLT	M8 x 1,25 x 45 mm	8

ORIGINAL PART NUMBERS,MARKS AND MODELS MENTIONED ARE ONLY FOR DESCRIPTION PURPOSES.

SB7 RADIAL TYPE

CHEEFT NUMBER	1158

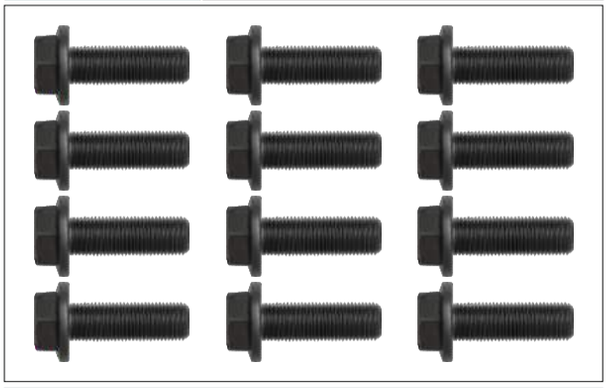

Caliper Connecting Bolt Kit

OEM NUMBER	

NR	CHEEFT NR	DESCRIPTIONS	DIMENSION	QTY
1	1665	BOLT	M16 x 1,5 x 50 mm	12

CHEEFT NUMBER	1098

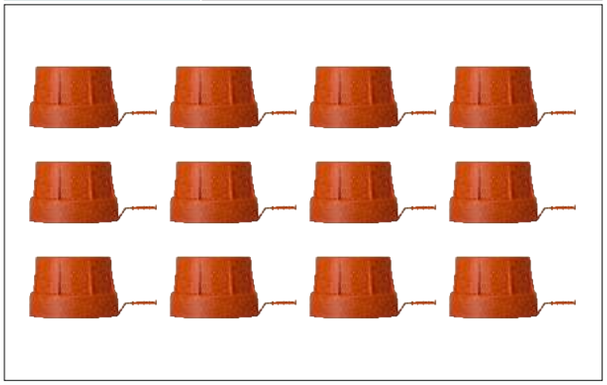

Rubber Bush Cap Kit (Short)

OEM NUMBER	

NR	CHEEFT NR	DESCRIPTIONS	DIMENSION	QTY
1	1661	RUBBER BUSH CAP (SHORT)		12

ORIGINAL PART NUMBERS,MARKS AND MODELS MENTIONED ARE ONLY FOR DESCRIPTION PURPOSES.

SB7 RADIAL TYPE

MN TGA SET (NEW MODEL)

CHEEFT NUMBER: CHS1003

NR	CHEEFT NR	DESCRIPTIONS	QTY
1	1040	CALIPER GUIDES & SEALS REPAIR KIT	1
2	1032	CALIPER BRIDGE ASSEMBLY	1
3	1016	PISTON & SEALS REPAIR KIT (Ø74 mm)	1
4	1029	CALIPER ADJUSTING MECHANISM	1
5	1030	CALIPER ADJUSTING SHAFT (WITH SPRING)	1
6	1031	CALIPER CHAIN (29 LINKS)	1
7	1168	CALIPER ROLLER BEARINGS	1
8	1008	CALIPER CALIBRATION BOLT	2

AXR SET (OLD MODEL)

CHEEFT NUMBER: CHS1005

NR	CHEEFT NR	DESCRIPTIONS	QTY
1	1040	CALIPER GUIDES & SEALS REPAIR KIT	1
2	1029	CALIPER ADJUSTING MECHANISM	1
3	1030	CALIPER ADJUSTING SHAFT (WITH SPRING)	1
4	1032	CALIPER BRIDGE ASSEMBLY	1
5	1031	CALIPER CHAIN (29 LINKS)	1
6	1005	CALIPER ROLLER BEARINGS	1
7	1008	CALIPER CALIBRATION BOLT	2
8	1016	PISTON & SEALS REPAIR KIT (Ø74 mm)	1

ORIGINAL PART NUMBERS,MARKS AND MODELS MENTIONED ARE ONLY FOR DESCRIPTION PURPOSES.

COHEEFT®
AIR DISC BRAKE CALIPER REPAIR KITS

KNR

SL7 TYPE
(K017549M2-M1)
SM7 TYPE

Always the Best...

EAC CE UDEM JAS-ANZ ISO 9001 2015

C-HEEFT®
AIR DISC BRAKE CALIPER REPAIR KITS

KNR

SL7 TYPE
(K017549M2-M1)
SM7 TYPE

Always the Best...

EAC CE UDEM JAS-ANZ ISO 9001 2015

SL7 TYPE (K017549M2-M1)

CHEEFT NUMBER	1040

Caliper Guides & Seals Repair Kit

OEM NUMBER	K001915 - K048389K50 - MB 000 420 4682 MN 81.50822.6034 - 81.50822.6037 SCN 1477675 - 1527631 - 2121646 - DF 1639100

NR	CHEEFT NR	DESCRIPTIONS	DIMENSION	QTY
1	1501	GUIDE PIN	Ø32 x 80 mm	1
2	1505	GUIDE PIN	Ø36 x 113,70 mm	1
3	1513	BOLT	M16 x 1,5 x 80 mm	1
4	1514	BOLT	M16 x 1,5 x 87 mm	1
5	1521	BRONZE BUSH	Ø40 x Ø36 x 82 mm	1
6	1523	METAL-RUBBER BUSH (SHORT)	Ø39 mm (metal end)	1
7	1531	INNER BOOT		1
8	1543	STEEL CAP	Ø40 x 14,5 mm	1
9	1551	INNER BOOT RING		1

CHEEFT NUMBER	1070

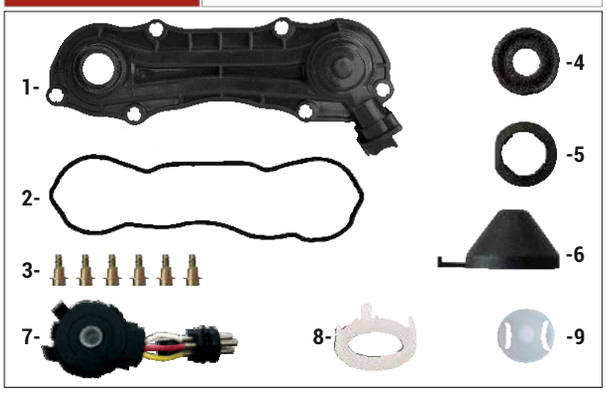

Caliper Sensor Cover (3 Cables Sensor)

OEM NUMBER	MB

NR	CHEEFT NR	DESCRIPTIONS	DIMENSION	QTY
1	1583	PLASTIC COVER (WITH HOLE)		1
2	1554	SENSOR COVER SEAL		1
3	1575	SCREW WITH RIVET		6
4	1550	SEAL		1
5	1600	CALIPER PLASTIC COVER RING		1
6	1557	PLASTIC COVER CAP	Ø38 mm	1
7	1587	3 CABLES SENSOR (FOR MB)		1
8	1647	SENSOR STABILIZER PLASTIC		1
9	1559	SENSOR ADJUSTER PLASTIC	5,3 mm	1

CHEEFT NUMBER	1042

Caliper Bridge Assembly

OEM NUMBER	

NR	CHEEFT NR	DESCRIPTIONS	DIMENSION	QTY
1	1571	SPRING	Ø25 x 49 mm	1
2	1593	BRIDGE ASSEMBLY		1

ORIGINAL PART NUMBERS,MARKS AND MODELS MENTIONED ARE ONLY FOR DESCRIPTION PURPOSES.

SL7 TYPE (K017549M2-M1)

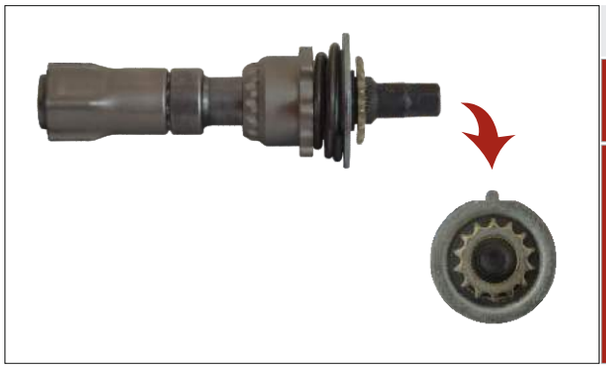

Caliper Adjusting Mechanism	
CHEEFT NUMBER	1029
OEM NUMBER	

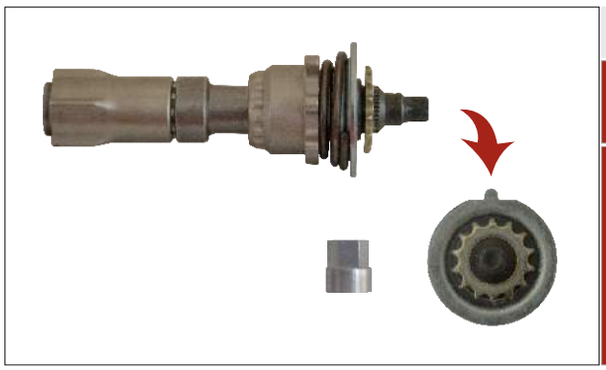

Caliper Adjusting Mechanism (Orig. Type)	
CHEEFT NUMBER	1209
OEM NUMBER	

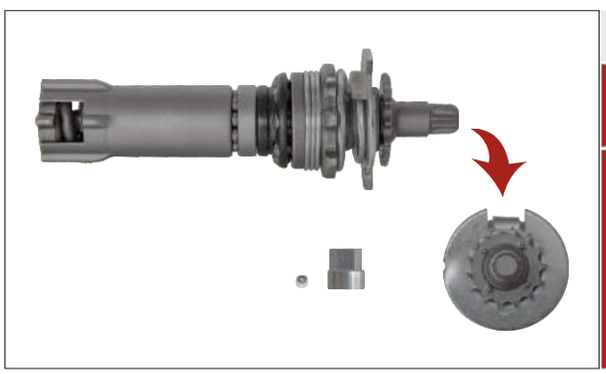

Caliper Adjusting Mechanism	
CHEEFT NUMBER	1101
OEM NUMBER	

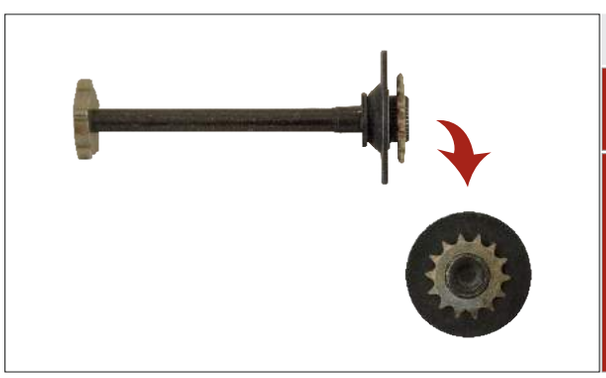

Caliper Adjusting Shaft (Without Spring)	
CHEEFT NUMBER	1052
OEM NUMBER	

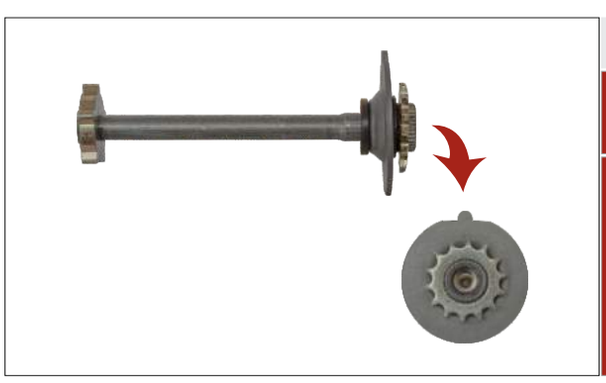

Caliper Adjusting Shaft (Without Spring)	
CHEEFT NUMBER	1104
OEM NUMBER	

ORIGINAL PART NUMBERS,MARKS AND MODELS MENTIONED ARE ONLY FOR DESCRIPTION PURPOSES.

SL7 TYPE (K017549M2-M1)

CHEEFT NUMBER	1130

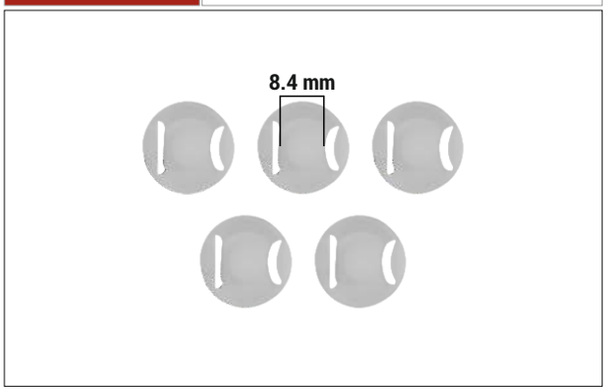

Sensor Adjuster Plastic Kit

OEM NUMBER	

NR	CHEEFT NR	DESCRIPTIONS	DIMENSION	QTY
1	1590	SENSOR ADJUSTER PLASTIC	8,4 mm	5

CHEEFT NUMBER	1158

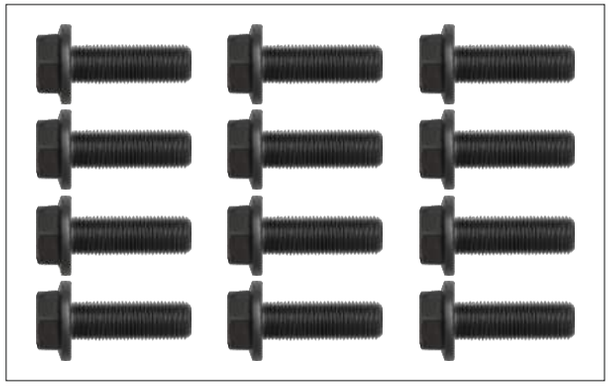

Caliper Connecting Bolt Kit

OEM NUMBER	

NR	CHEEFT NR	DESCRIPTIONS	DIMENSION	QTY
1	1665	BOLT	M16 x 1,5 x 50 mm	12

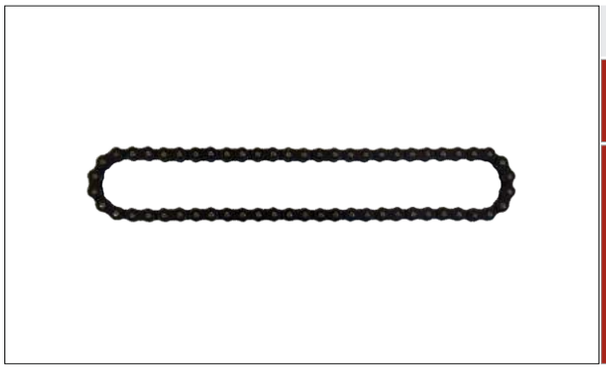

Caliper Chain (29 links)

CHEEFT NUMBER	1031
OEM NUMBER	

ORIGINAL PART NUMBERS,MARKS AND MODELS MENTIONED ARE ONLY FOR DESCRIPTION PURPOSES.

SL7 TYPE (K017549M2-M1)

Caliper Lever (Angle 12° - 122 mm)	
CHEEFT NUMBER	1179
OEM NUMBER	

Caliper Bearings	
CHEEFT NUMBER	1069
OEM NUMBER	

ORIGINAL PART NUMBERS,MARKS AND MODELS MENTIONED ARE ONLY FOR DESCRIPTION PURPOSES.

SM7 TYPE

CHEEFT NUMBER	1056

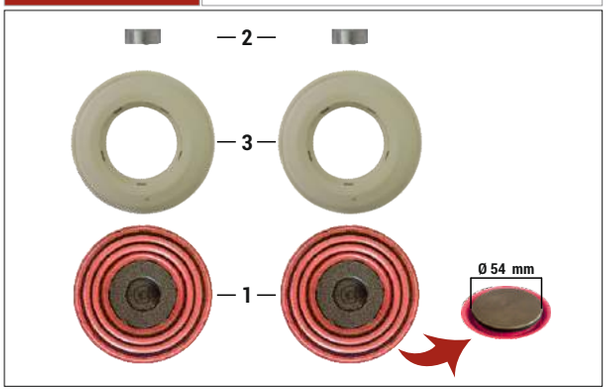

Caliper Pistons Tappet & Seals Repair Kit

OEM NUMBER	K046523K50 - MB 000 423 0316

NR	CHEEFT NR	DESCRIPTIONS	DIMENSION	QTY
1	1568	TAPPET & BOOT ASSEMBLY (54 mm TAPPET)	Ø69 mm	2
2	1569	TAPPET BUSH	Ø17 x Ø15 x 7 mm	2
3	1538	INNER SEAL		2

CHEEFT NUMBER	1053

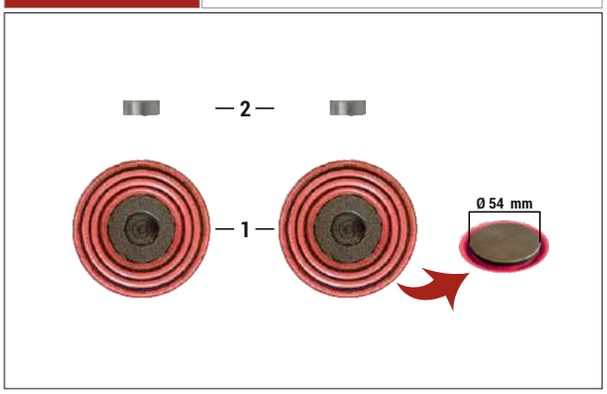

Caliper Piston Tappet Repair Kit

OEM NUMBER	

NR	CHEEFT NR	DESCRIPTIONS	DIMENSION	QTY
1	1568	TAPPET & BOOT ASSEMBLY (54 mm TAPPET)	Ø69 mm	2
2	1569	TAPPET BUSH	Ø17 x Ø15 x 7 mm	2

CHEEFT NUMBER	1090

Caliper Guide Repair Kit

OEM NUMBER	

NR	CHEEFT NR	DESCRIPTIONS	DIMENSION	QTY
1	1501	GUIDE PIN	Ø32 x 80 mm	1
2	1513	BOLT	M16 x 1,5 x 80 mm	1
3	1523	METAL-RUBBER BUSH (SHORT VERSION)	Ø39 mm (metal end)	1

ORIGINAL PART NUMBERS,MARKS AND MODELS MENTIONED ARE ONLY FOR DESCRIPTION PURPOSES.

SM7 TYPE

CHEEFT NUMBER	1019

Caliper Plastic Cover (Without Sensor)

OEM NUMBER	

NR	CHEEFT NR	DESCRIPTIONS	DIMENSION	QTY
1	1546	PLASTIC COVER		1
2	1554	SENSOR COVER SEAL		1
3	1575	SCREW WITH RIVET		6
4	1550	SEAL		1
5	1600	CALIPER PLASTIC COVER RING		1
6	1557	PLASTIC COVER CAP	Ø38 mm	1

CHEEFT NUMBER	1033

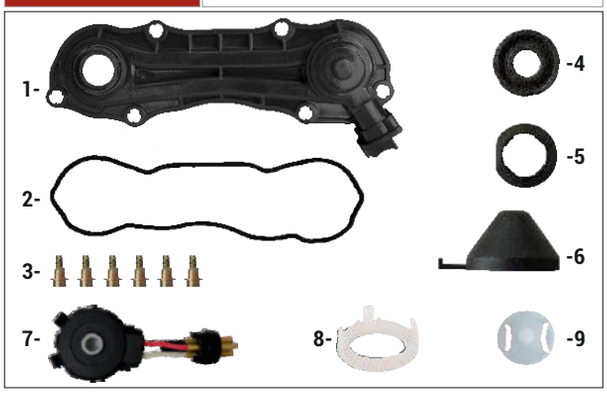

Caliper Sensor Cover (2 Cables Sensor)

OEM NUMBER	

NR	CHEEFT NR	DESCRIPTIONS	DIMENSION	QTY
1	1583	PLASTIC COVER (WITH HOLE)		1
2	1554	SENSOR COVER SEAL		1
3	1575	SCREW WITH RIVET		6
4	1550	SEAL		1
5	1600	CALIPER PLASTIC COVER RING		1
6	1557	PLASTIC COVER CAP	Ø38 mm	1
7	1547	2 CABLES SENSOR		1
8	1647	SENSOR STABILIZER PLASTIC		1
9	1559	SENSOR ADJUSTER PLASTIC	5,3 mm	1

CHEEFT NUMBER	1074

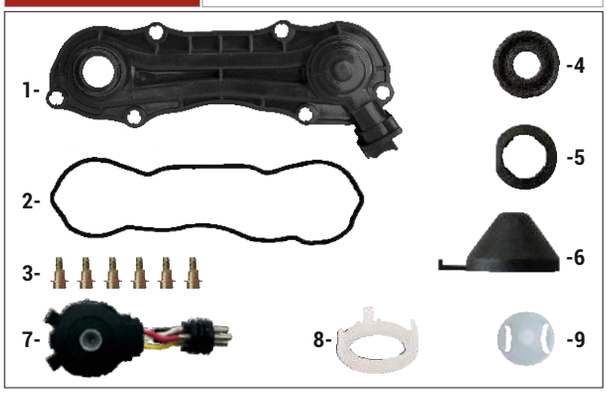

Caliper Sensor Cover (3 Cables Sensor)

OEM NUMBER	MN TGA

NR	CHEEFT NR	DESCRIPTIONS	DIMENSION	QTY
1	1583	PLASTIC COVER (WITH HOLE)		1
2	1554	SENSOR COVER SEAL		1
3	1575	SCREW WITH RIVET		6
4	1550	SEAL		1
5	1600	CALIPER PLASTIC COVER RING		1
6	1557	PLASTIC COVER CAP	Ø38 mm	1
7	1588	3 CABLES SENSOR(FOR MN)		1
8	1647	SENSOR STABILIZER PLASTIC		1
9	1559	SENSOR ADJUSTER PLASTIC	5,3 mm	1

ORIGINAL PART NUMBERS,MARKS AND MODELS MENTIONED ARE ONLY FOR DESCRIPTION PURPOSES.

SM7 TYPE

CHEEFT NUMBER	1200

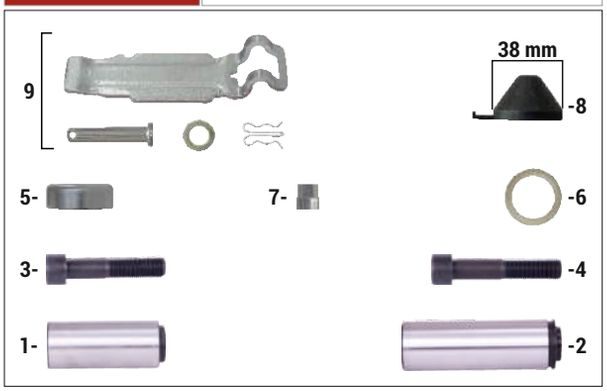

Caliper Guides & Caps Repair Kit

OEM NUMBER	K012912

NR	CHEEFT NR	DESCRIPTIONS	DIMENSION	QTY
1	1501	GUIDE PIN	Ø32 x 80 mm	1
2	1505	GUIDE PIN	Ø36 x 113,70 mm	1
3	1513	BOLT	M16 x 1,5 x 80 mm	1
4	1514	BOLT	M16 x 1,5 x 87 mm	1
5	1543	STEEL CAP	Ø40 x 14,5 mm	1
6	1551	INNER BOOT RING		1
7	1563	ADJUSTING MECHANISM ADAPTER		1
8	1557	ADJUSTER CAP	Ø38 mm	1
9	1028	CALIPER PAD RETAINER REPAIR KIT		1

CHEEFT NUMBER	1046

Caliper Cover (With Nut)

OEM NUMBER	

NR	CHEEFT NR	DESCRIPTIONS	DIMENSION	QTY
1	1599	COVER (With Gasket & Nut)		1
2	1573	BOLT	M8 x 16 mm	6
3	1574	BOLT	M8 x 50 mm	2

CHEEFT NUMBER	1218

Sensor Rod Kit (Small)

OEM NUMBER	

NR	CHEEFT NR	DESCRIPTIONS	DIMENSION	QTY
1	1646	SENSOR ROD (SMALL)		5

ORIGINAL PART NUMBERS,MARKS AND MODELS MENTIONED ARE ONLY FOR DESCRIPTION PURPOSES.

SM7 TYPE

CHEEFT NUMBER	1219

Sensor Stabilizer Plastic Kit

OEM NUMBER	

NR	CHEEFT NR	DESCRIPTIONS	DIMENSION	QTY
1	1647	SENSOR STABILIZER PLASTIC		5

CHEEFT NUMBER	1068

Caliper Plug Kit

OEM NUMBER	

NR	CHEEFT NR	DESCRIPTIONS	DIMENSION	QTY
1	1586	PLUG	Ø 55/50 x 11 mm	5

CHEEFT NUMBER	1166

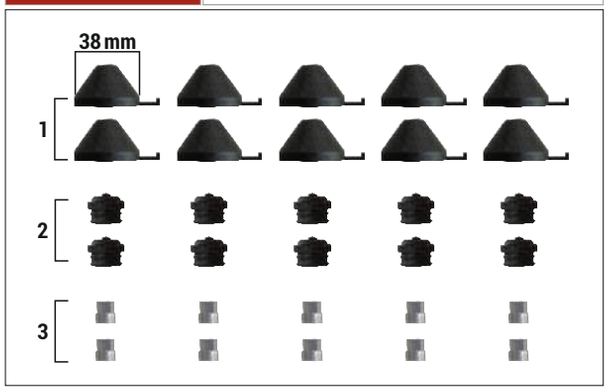

Caliper Plastic Cover Cap Kit

OEM NUMBER	K000945 - MN 81.50822.6024 - SCN 2121868 DF 1439493 - SF 8 531 7002 500

NR	CHEEFT NR	DESCRIPTIONS	DIMENSION	QTY
1	1557	PLASTIC COVER CAP	Ø38 mm	10
2	1558	PLASTIC COVER CAP		10
3	1563	ADJUSTING MECHANISM ADAPTER		10

ORIGINAL PART NUMBERS,MARKS AND MODELS MENTIONED ARE ONLY FOR DESCRIPTION PURPOSES.

SM7 TYPE

CHEEFT NUMBER	1167

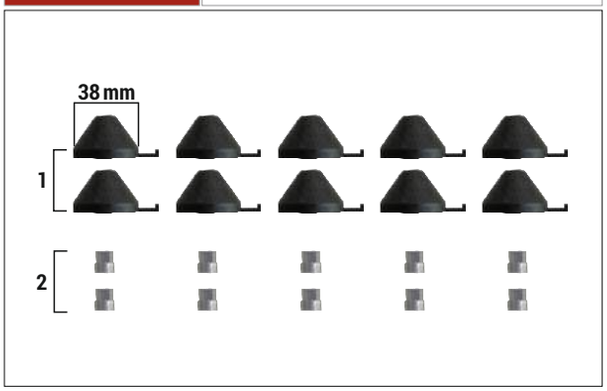

Caliper Plastic Cover Cap Kit

OEM NUMBER	

NR	CHEEFT NR	DESCRIPTIONS	DIMENSION	QTY
1	1557	PLASTIC COVER CAP	Ø38 mm	10
2	1563	ADJUSTING MECHANISM ADAPTER		10

CHEEFT NUMBER	1098

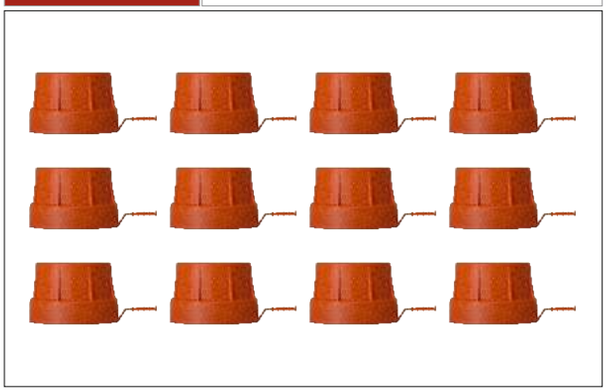

Rubber Bush Cap Kit (Short)

OEM NUMBER	

NR	CHEEFT NR	DESCRIPTIONS	DIMENSION	QTY
1	1661	RUBBER BUSH CAP (SHORT)		12

CHEEFT NUMBER	1099

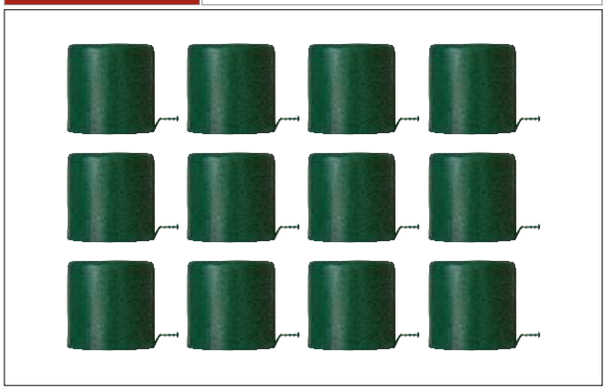

Rubber Bush Cap Kit (Long)

OEM NUMBER	

NR	CHEEFT NR	DESCRIPTIONS	DIMENSION	QTY
1	1662	RUBBER BUSH CAP (LONG)		12

ORIGINAL PART NUMBERS,MARKS AND MODELS MENTIONED ARE ONLY FOR DESCRIPTION PURPOSES.

SM7 TYPE

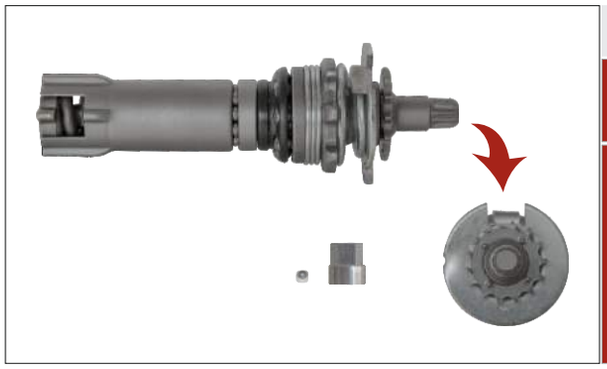

Caliper Adjusting Mechanism	
CHEEFT NUMBER	1101
OEM NUMBER	

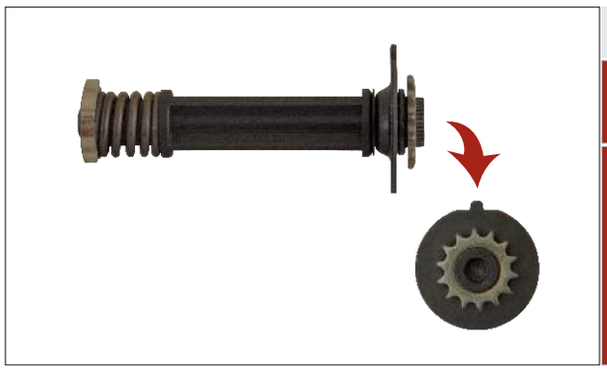

Mechanism With Spring New Type	
CHEEFT NUMBER	1222
OEM NUMBER	

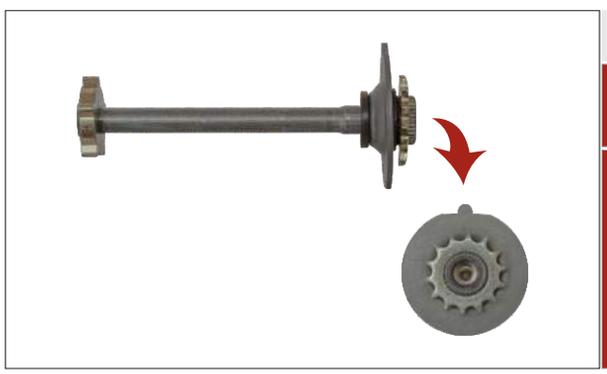

Caliper Adjusting Shaft (Without Spring)	
CHEEFT NUMBER	1104
OEM NUMBER	

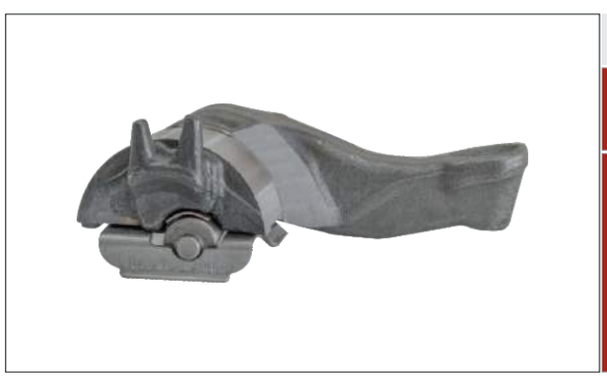

Caliper Lever	
CHEEFT NUMBER	1057
OEM NUMBER	Z033222

Caliper Calibration Bolt	
CHEEFT NUMBER	1009
OEM NUMBER	

ORIGINAL PART NUMBERS,MARKS AND MODELS MENTIONED ARE ONLY FOR DESCRIPTION PURPOSES.

SM7 TYPE

CHEEFT NUMBER	1151

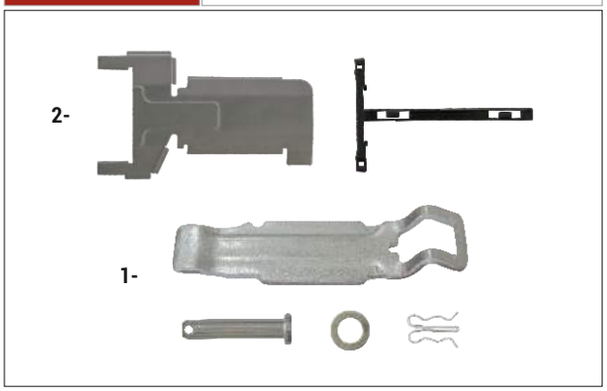

NR	CHEEFT NR	DESCRIPTIONS	DIMENSION	QTY
1	1060	PAD RETAINER REPAIR KIT		1
2	1148	CABLO PROTECTION KIT		1

Brake Pad Retainer Repair Kit

OEM NUMBER	K000884

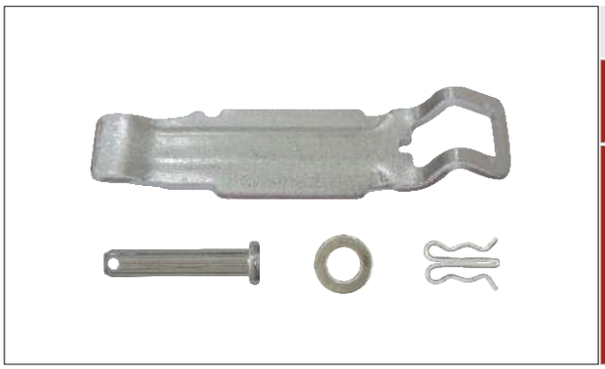

Caliper Pad Retainer Repair Kit

CHEEFT NUMBER	1060
OEM NUMBER	II19712004 - II30679004 - II197120061 K000129 - MB 000 420 2682 SF 8 531 7002 600

AXR SET (NEW MODEL)

CHEEFT NUMBER	CHS1009

NR	CHEEFT NR	DESCRIPTIONS	QTY
1	1009	CALIPER CALIRATION BOLT	2
2	1029	CALIPER ADJUSTING MECHANISM	1
3	1031	CALIPER CHAIN (29 LINKS)	1
4	1040	CALIPER GUIDES & SEALS REPAIR KIT	1
5	1042	CALIPER BRIDGE ASSEMBLY	1
6	1046	CALIPER COVER	1
7	1052	CALIPER ADJUSTING SHAFT (WITHOUT SPRING)	1
8	1056	PISTON & SEAL REPAIR KIT (Ø69 mm)	1
9	1069	CALIPER BEARINGS	1

ORIGINAL PART NUMBERS,MARKS AND MODELS MENTIONED ARE ONLY FOR DESCRIPTION PURPOSES.

COHEEFT®
AIR DISC BRAKE CALIPER REPAIR KITS

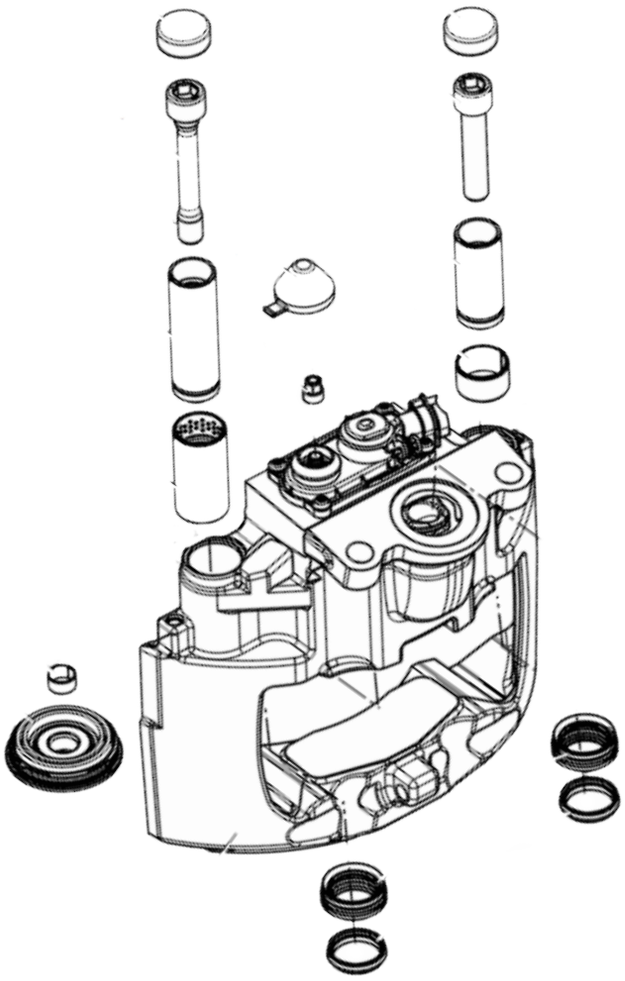

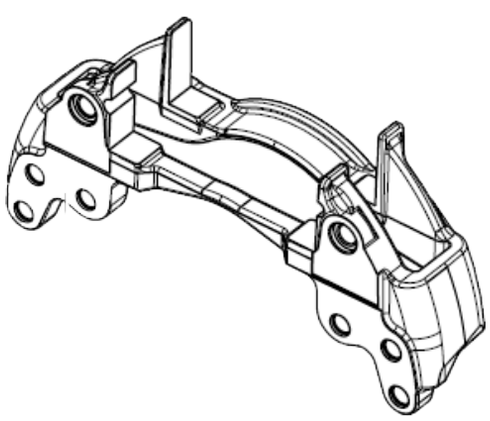

SN5

KNR

SN5 TYPE

Always the Best...

EAC CE UDEM JAS-ANZ ISO 9001 2015

SN5 TYPE

CHEEFT NUMBER	1173

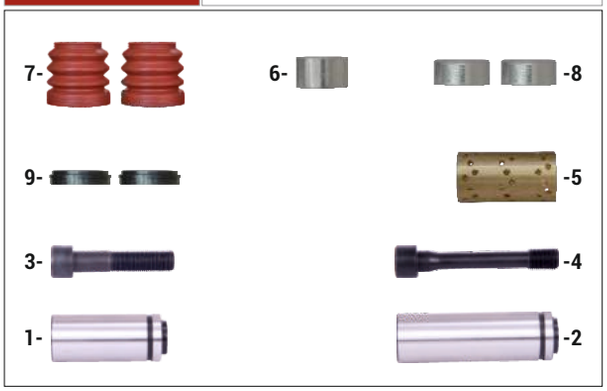

Caliper Guides & Seals Repair Kit

OEM NUMBER	K001928 - MB 000 420 4182 MN 81.50822.6026 - SCN 2121650

NR	CHEEFT NR	DESCRIPTIONS	DIMENSION	QTY
1	1508	GUIDE PIN	Ø29,70 x 71,50 mm	1
2	1509	GUIDE PIN	Ø30 x 99 mm	1
3	1512	BOLT	M16 x 1,5 x 75 mm	1
4	1515	BOLT	M16 x 1,5 x 105 mm	1
5	1528	BRONZE BUSH	Ø34 x Ø30 x 65 mm	1
6	1529	TEFLON BUSH	Ø34 x Ø30 x 20 mm	1
7	1535	INNER BOOT (SMALL)		2
8	1545	STEEL CAP	Ø34 x 14 mm	2
9	1556	INNER BOOT RING		2

CHEEFT NUMBER	1001

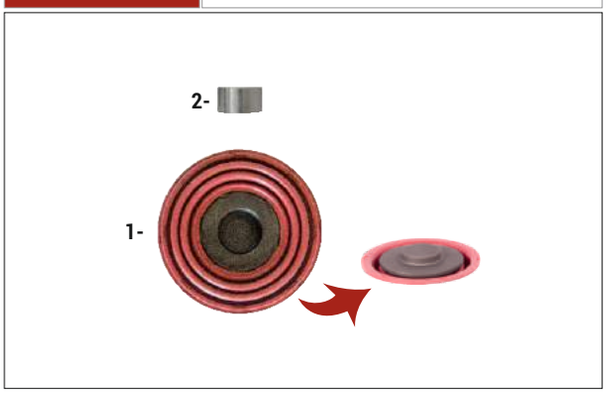

Caliper Piston Tappet Repair Kit

OEM NUMBER	K001929 - MB 000 420 4282 MN 81.50822.6027

NR	CHEEFT NR	DESCRIPTIONS	DIMENSION	QTY
1	1536	TAPPET & BOOT ASSEMBLY	Ø69 mm	1
2	1520	TAPPET BUSH	Ø18 x Ø16 x 10 mm	1

CHEEFT NUMBER	1189

Caliper Plastic Cover (Without Sensor)

OEM NUMBER	

NR	CHEEFT NR	DESCRIPTIONS	DIMENSION	QTY
1	1549	PLASTIC COVER (WITH HOLE)		1
2	1565	SENSOR COVER SEAL		1
3	1575	SCREW WITH RIVET		4
4	1550	SEAL		1
5	1557	PLASTIC COVER CAP	Ø38 mm	1

ORIGINAL PART NUMBERS,MARKS AND MODELS MENTIONED ARE ONLY FOR DESCRIPTION PURPOSES.

SN5 TYPE

CHEEFT NUMBER	1054

Caliper Sensor Cover (2 Cables Sensor)

OEM NUMBER	

NR	CHEEFT NR	DESCRIPTIONS	DIMENSION	QTY
1	1549	PLASTIC COVER (WITH HOLE)		1
2	1565	SENSOR COVER SEAL		1
3	1575	SCREW WITH RIVET		4
4	1550	SEAL		1
5	1557	PLASTIC COVER CAP	Ø38 mm	1
6	1547	2 CABLES SENSOR		1
7	1559	SENSOR ADJUSTER PLASTIC	5,3 mm	1
8	1647	SENSOR STABILIZER PLASTIC		1

CHEEFT NUMBER	1075

Caliper Sensor Cover (3 Cables Sensor)

OEM NUMBER	12-180 MN TGL

NR	CHEEFT NR	DESCRIPTIONS	DIMENSION	QTY
1	1549	PLASTIC COVER (WITH HOLE)		1
2	1565	SENSOR COVER SEAL		1
3	1575	SCREW WITH RIVET		4
4	1550	SEAL		1
5	1557	PLASTIC COVER CAP	Ø38 mm	1
6	1588	3 CABLES SENSOR (FOR MN)		1
7	1559	SENSOR ADJUSTER PLASTIC	5,3 mm	1
8	1647	SENSOR STABILIZER PLASTIC		1

CHEEFT NUMBER	1077

Caliper Sensor Cover (3 Cables Sensor)

OEM NUMBER	MB

NR	CHEEFT NR	DESCRIPTIONS	DIMENSION	QTY
1	1549	PLASTIC COVER (WITH HOLE)		1
2	1565	SENSOR COVER SEAL		1
3	1575	SCREW WITH RIVET		4
4	1550	SEAL		1
5	1557	PLASTIC COVER CAP	Ø38 mm	1
6	1587	3 CABLES SENSOR (FOR MB)		1
7	1559	SENSOR ADJUSTER PLASTIC	5,3 mm	1
8	1647	SENSOR STABILIZER PLASTIC		1

ORIGINAL PART NUMBERS,MARKS AND MODELS MENTIONED ARE ONLY FOR DESCRIPTION PURPOSES.

SN5 TYPE

CHEEFT NUMBER	1177

Caliper Bridge Assembly

OEM NUMBER	

NR	CHEEFT NR	DESCRIPTIONS	DIMENSION	QTY
1	1572	SPRING	Ø21 x 51,5 mm	2
2	1595	BRIDGE ASSEMBLY		1

CHEEFT NUMBER	1047

Caliper Cover

OEM NUMBER	

NR	CHEEFT NR	DESCRIPTIONS	DIMENSION	QTY
1	1598	COVER WITH GASKET		1
2	1573	BOLT	M8 x 16 mm	6

CHEEFT NUMBER	1049

Caliper Bridge Assembly Repair Kit

OEM NUMBER	

NR	CHEEFT NR	DESCRIPTIONS	DIMENSION	QTY
1	1177	CALIPER BRIDGE ASSEMBLY		1
2	1047	CALIPER COVER		1
3	1560	BRIDGE COVER GAITER		1

ORIGINAL PART NUMBERS,MARKS AND MODELS MENTIONED ARE ONLY FOR DESCRIPTION PURPOSES.

SN5 TYPE

CHEEFT NUMBER	1048

Bridge Cover Gaiter Kit

OEM NUMBER	

NR	CHEEFT NR	DESCRIPTIONS	DIMENSION	QTY
1	1560	BRIDGE COVER GAITER		5

CHEEFT NUMBER	1068

Caliper Plug Kit

OEM NUMBER	

NR	CHEEFT NR	DESCRIPTIONS	DIMENSION	QTY
1	1586	PLUG	Ø 55/50 x 11 mm	5

CHEEFT NUMBER	1158

Caliper Connecting Bolt Kit

OEM NUMBER	

NR	CHEEFT NR	DESCRIPTIONS	DIMENSION	QTY
1	1665	BOLT	M16 x 1,5 x 50 mm	12

ORIGINAL PART NUMBERS,MARKS AND MODELS MENTIONED ARE ONLY FOR DESCRIPTION PURPOSES.

SN5 TYPE

Caliper Calibration Bolt	
CHEEFT NUMBER	1008
OEM NUMBER	

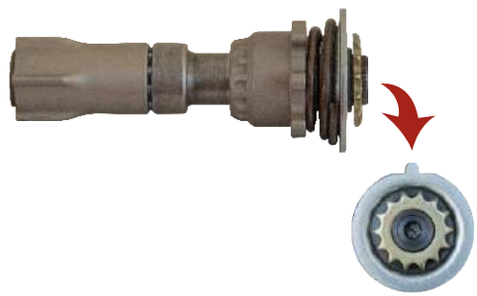

Caliper Adjusting Mechanism	
CHEEFT NUMBER	1013
OEM NUMBER	

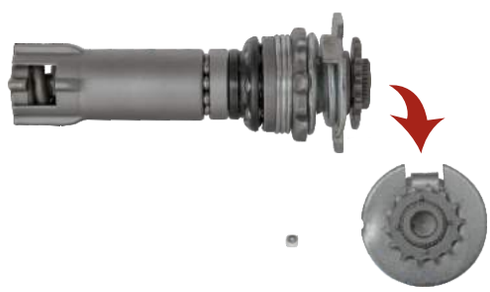

Caliper Adjusting Mechanism	
CHEEFT NUMBER	1102
OEM NUMBER	

Caliper Adjusting Shaft	
CHEEFT NUMBER	1175
OEM NUMBER	

Caliper Roller Bearings	
CHEEFT NUMBER	1174
OEM NUMBER	

ORIGINAL PART NUMBERS,MARKS AND MODELS MENTIONED ARE ONLY FOR DESCRIPTION PURPOSES.

SN5 TYPE

Caliper Chain (14 Links)

CHEEFT NUMBER	1007
OEM NUMBER	

Caliper Lever

CHEEFT NUMBER	1183
OEM NUMBER	

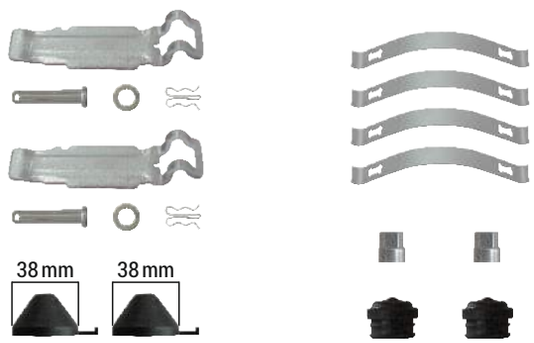

Caliper Pad Retainer Repair Kit

CHEEFT NUMBER	1051
OEM NUMBER	

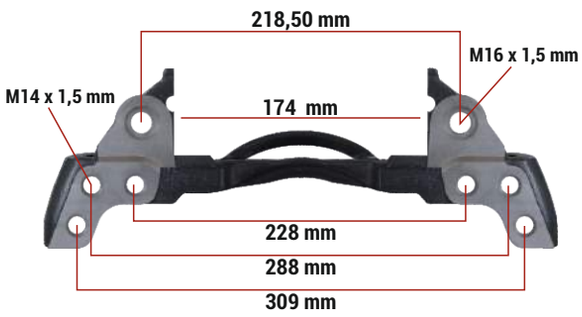

12-160 TGL MN 17,5 Inch Caliper Carrier (Right-Left)

CHEEFT NUMBER	1221
OEM NUMBER	K005606

ORIGINAL PART NUMBERS,MARKS AND MODELS MENTIONED ARE ONLY FOR DESCRIPTION PURPOSES.

SN5 TYPE

12-180 MN TGL SET	CHEEFT NUMBER	CHS1002

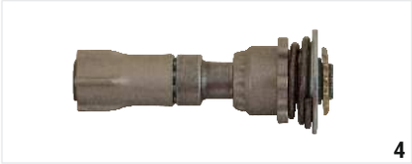

NR	CHEEFT NR	DESCRIPTIONS	QTY
1	1173	CALIPER GUIDES & SEALS REPAIR KIT	1
2	1007	CALIPER CHAIN (14 LINKS)	1
3	1008	CALIPER CALIBRATION BOLT	1
4	1013	CALIPER ADJUSTING MECHANISM	1
5	1001	PISTON TAPPET REPAIR KIT (Ø69 mm)	1
6	1174	CALIPER ROLLER BEARINGS	1
7	1175	CALIPER AJUSTING SHAFT	1
8	1560	ADJUSTER SCREW GAITER	1
9	1047	CALIPER COVER	1
10	1177	CALIPER BRIDGE ASSEMBLY	1

ORIGINAL PART NUMBERS,MARKS AND MODELS MENTIONED ARE ONLY FOR DESCRIPTION PURPOSES.

COHEEFT®
AIR DISC BRAKE CALIPER REPAIR KITS

KNR

SN6/SN7/SK7
NA7/ST7 TYPE

Always the Best...

EAC CE UDEM JAS-ANZ ISO 9001 2015

COHEEFT®
AIR DISC BRAKE CALIPER REPAIR KITS

SN6

KNR

SN6/SN7/SK7 NA7/ST7 TYPE

Always the Best...

EAC CE UDEM JAS-ANZ ISO 9001 2015

COHEEFT®

AIR DISC BRAKE CALIPER REPAIR KITS

SN7

KNR

SN6/SN7/SK7 NA7/ST7 TYPE

Always the Best...

EAC CE UDEM JAS-ANZ ISO 9001 2015

COHEEFT®
AIR DISC BRAKE CALIPER REPAIR KITS

SK7

KNR

SN6/SN7/SK7
NA7/ST7 TYPE

Always the Best...

EAC CE

C-HEEFT®
AIR DISC BRAKE CALIPER REPAIR KITS

ST7

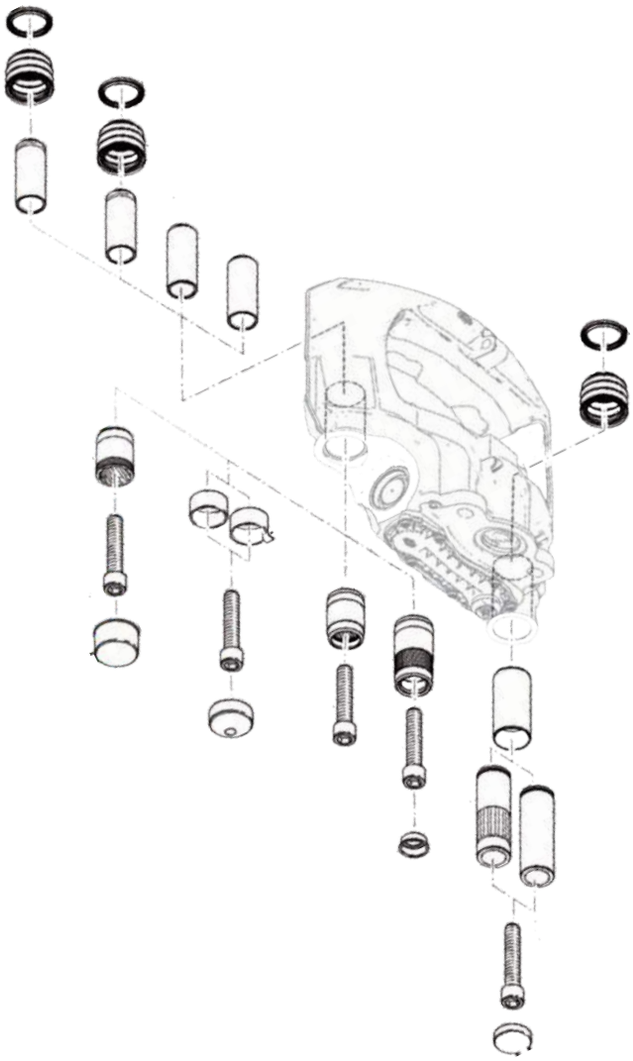

KNR

SN6/SN7/SK7
NA7/ST7 TYPE

Always the Best...

EAC CE UDEM JAS-ANZ ISO 9001 2015

SN6/SN7/SK7/NA7/ST7 TYPE

CHEEFT NUMBER	1039

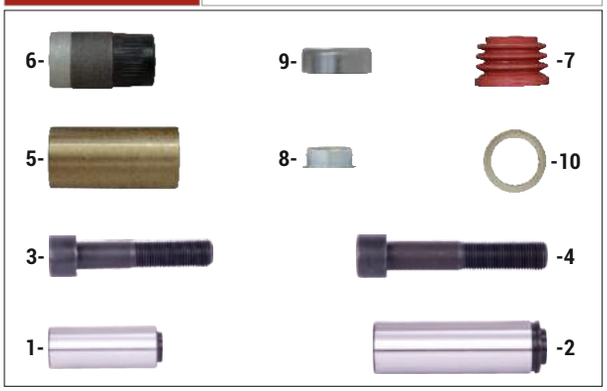

Caliper Guides & Seals Repair Kit

OEM NUMBER	K000472 - K017707 - MB 000 420 3482 MN 81.50822.6019 - SCN 1723416 - IVECO 42541412 B.V 09.801.06.33.0 - SF 3 434 3812 00

NR	CHEEFT NR	DESCRIPTIONS	DIMENSION	QTY
1	1501	GUIDE PIN	Ø32 x 80 mm	1
2	1505	GUIDE PIN	Ø36 x 113,70 mm	1
3	1513	BOLT	M16 x 1,5 x 80 mm	1
4	1514	BOLT	M16 x 1,5 x 87 mm	1
5	1521	BRONZE BUSH	Ø40 x Ø36 x 82 mm	1
6	1522	METAL-RUBBER BUSH	Ø39 mm (metal end)	1
7	1531	INNER BOOT		1
8	1542	STEEL CAP	Ø26 x 11,5 mm	1
9	1543	STEEL CAP	Ø40 x 14,5 mm	1
10	1551	INNER BOOT RING		1

CHEEFT NUMBER	1040

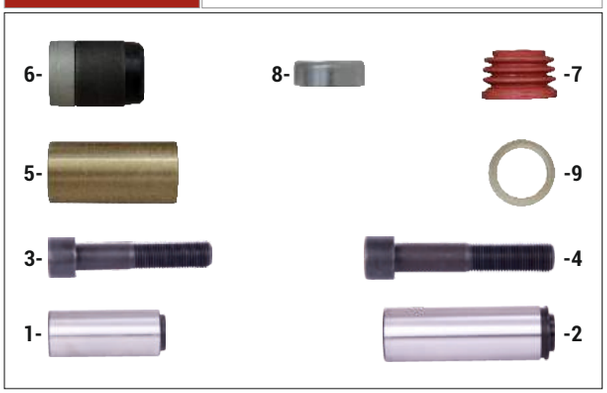

Caliper Guides & Seals Repair Kit

OEM NUMBER	K001915 - K048389K50 - MB 000 420 4682 MN 81.50822.6034 - 81.50822.6037 SCN 1477675 - 1527631 - 2121646 - DF 1639100

NR	CHEEFT NR	DESCRIPTIONS	DIMENSION	QTY
1	1501	GUIDE PIN	Ø32 x 80 mm	1
2	1505	GUIDE PIN	Ø36 x 113,70 mm	1
3	1513	BOLT	M16 x 1,5 x 80 mm	1
4	1514	BOLT	M16 x 1,5 x 87 mm	1
5	1521	BRONZE BUSH	Ø40 x Ø36 x 82 mm	1
6	1523	METAL-RUBBER BUSH (SHORT)	Ø39 mm (metal end)	1
7	1531	INNER BOOT		1
8	1543	STEEL CAP	Ø40 x 14,5 mm	1
9	1551	INNER BOOT RING		1

CHEEFT NUMBER	1080

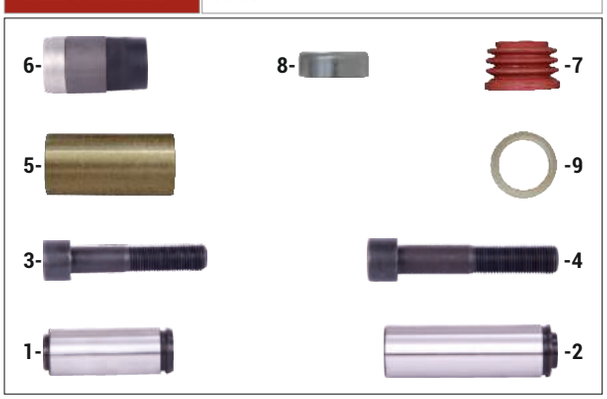

Caliper Guides & Seals Repair Kit

OEM NUMBER	K052759K50

NR	CHEEFT NR	DESCRIPTIONS	DIMENSION	QTY
1	1500	GUIDE PIN	Ø32 x 88,5 mm	1
2	1505	GUIDE PIN	Ø36 x 113,70 mm	1
3	1513	BOLT	M16 x 1,5 x 80 mm	1
4	1514	BOLT	M16 x 1,5 x 87 mm	1
5	1521	BRONZE BUSH	Ø40 x Ø36 x 82 mm	1
6	1522	METAL-RUBBER BUSH	Ø39 mm (metal end)	1
7	1531	INNER BOOT		1
8	1543	STEEL CAP	Ø40 x 14,5 mm	1
9	1551	INNER BOOT RING		1

ORIGINAL PART NUMBERS,MARKS AND MODELS MENTIONED ARE ONLY FOR DESCRIPTION PURPOSES.

SN6/SN7/SK7/NA7/ST7 TYPE

CHEEFT NUMBER	1164

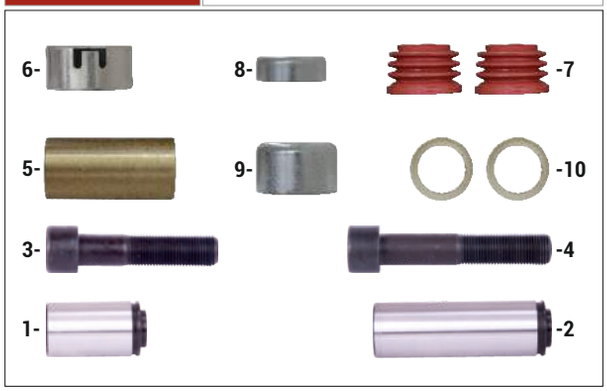

Caliper Guides & Seals Repair Kit

OEM NUMBER	K004100 - K004168 - K010766 - MB 000 420 5082 SCN 1748131 - 2121647 - 2198395 - SF 3 434 3815 00 OTHER: SCHMITZ 1008450 - BNDX 803114 HNDRCKSN S-29152-9 -MODEL ADB22X

NR	CHEEFT NR	DESCRIPTIONS	DIMENSION	QTY
1	1504	GUIDE PIN	Ø36 x 64 mm	1
2	1505	GUIDE PIN	Ø36 x 113,70 mm	1
3	1511	BOLT	M16 x 1,5 x 70 mm	1
4	1514	BOLT	M16 x 1,5 x 87 mm	1
5	1521	BRONZE BUSH	Ø40 x Ø36 x 82 mm	1
6	1527	SLOTTED BUSH	Ø40 x Ø36 x 20 mm	1
7	1531	INNER BOOT		2
8	1543	STEEL CAP	Ø40 x 14,5 mm	1
9	1544	STEEL CAP	Ø40 x 25 mm	1
10	1551	INNER BOOT RING		2

CHEEFT NUMBER	1181

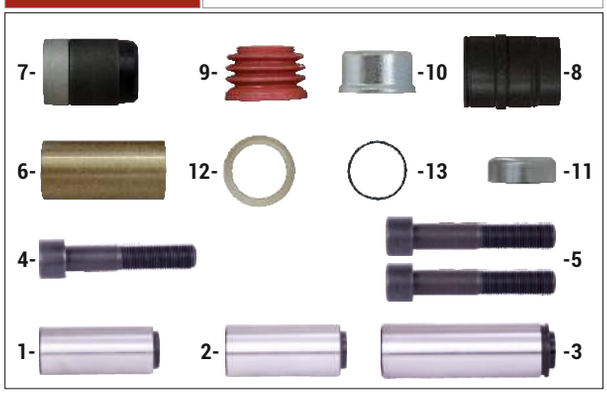

Caliper Guides & Seals Repair Kit

OEM NUMBER	K000365 - MB 000 420 0782 - 000 420 2282

NR	CHEEFT NR	DESCRIPTIONS	DIMENSION	QTY
1	1501	GUIDE PIN	Ø32 x 80 mm	1
2	1502	GUIDE PIN	Ø34 x 80 mm	1
3	1505	GUIDE PIN	Ø36 x 113,70 mm	1
4	1513	BOLT	M16 x 1,5 x 80 mm	1
5	1514	BOLT	M16 x 1,5 x 87 mm	2
6	1521	BRONZE BUSH	Ø40 x Ø36 x 82 mm	1
7	1523	METAL RUBBER BUSH (SHORT)	Ø39 mm (metal end)	1
8	1525	RUBBER BUSH		1
9	1531	INNER BOOT		1
10	1541	STEEL CAP	Ø50 x 28 mm	1
11	1543	STEEL CAP	Ø40 x 14,5 mm	1
12	1551	INNER BOOT RING		1
13	1553	O-RING		1

CHEEFT NUMBER	1210

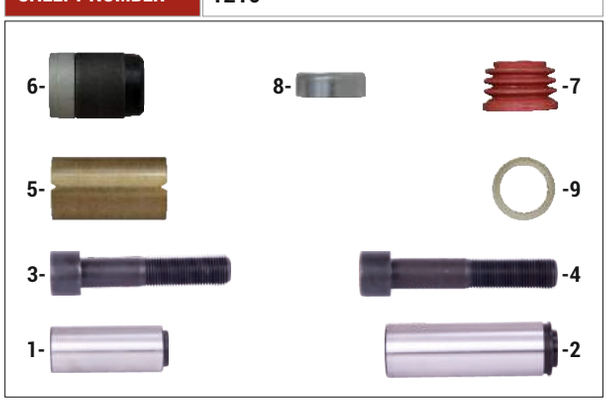

Caliper Guides & Seals Repair Kit

OEM NUMBER	

NR	CHEEFT NR	DESCRIPTIONS	DIMENSION	QTY
1	1501	GUIDE PIN	Ø32 x 80 mm	1
2	1505	GUIDE PIN	Ø36 x 113,70 mm	1
3	1513	BOLT	M16 x 1,5 x 80 mm	1
4	1514	BOLT	M16 x 1,5 x 87 mm	1
5	1632	BRONZE BUSH	Ø40 x Ø36 x 70 mm	1
6	1523	METAL-RUBBER BUSH (SHORT)	Ø39 mm (metal end)	1
7	1531	INNER BOOT		1
8	1543	STEEL CAP	Ø40 x 14,5 mm	1
9	1551	INNER BOOT RING		1

ORIGINAL PART NUMBERS,MARKS AND MODELS MENTIONED ARE ONLY FOR DESCRIPTION PURPOSES.

SN6/SN7/SK7/NA7/ST7 TYPE

CHEEFT NUMBER	1165

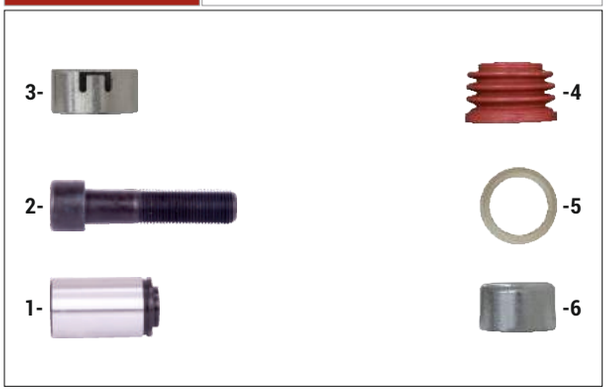

Caliper Guides & Seals Repair Kit

OEM NUMBER	

NR	CHEEFT NR	DESCRIPTIONS	DIMENSION	QTY
1	1504	GUIDE PIN	Ø36 x 64 mm	1
2	1511	BOLT	M16 x 1,5 x 70 mm	1
3	1527	SLOTTED BUSH	Ø40 x Ø36 x 20 mm	1
4	1531	INNER BOOT		1
5	1551	INNER BOOT RING		1
6	1544	STEEL CAP	Ø40 x 25 mm	1

CHEEFT NUMBER	1185

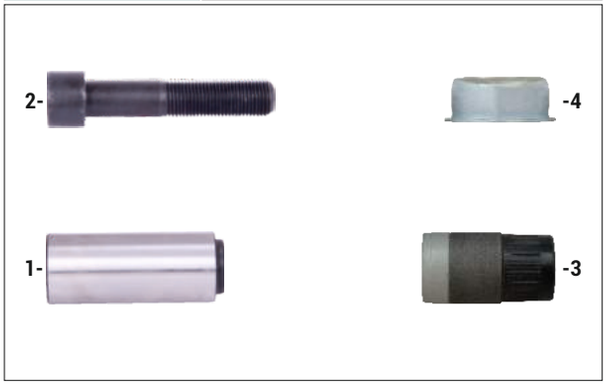

Caliper Guide Repair Kit

OEM NUMBER	B.V 09.801.06.91.0 - SF 3 434 3813 00

NR	CHEEFT NR	DESCRIPTIONS	DIMENSION	QTY
1	1501	GUIDE PIN	Ø32 x 80 mm	1
2	1513	BOLT	M16 x 1,5 x 80 mm	1
3	1522	METAL-RUBBER BUSH	Ø39 mm (metal end)	1
4	1542	STEEL CAP	Ø26 x 11,5 mm	1

CHEEFT NUMBER	1090

Caliper Guide Repair Kit

OEM NUMBER	

NR	CHEEFT NR	DESCRIPTIONS	DIMENSION	QTY
1	1501	GUIDE PIN	Ø32 x 80 mm	1
2	1513	BOLT	M16 x 1,5 x 80 mm	1
3	1523	METAL-RUBBER BUSH (SHORT VERSION)	Ø39 mm (metal end)	1

ORIGINAL PART NUMBERS,MARKS AND MODELS MENTIONED ARE ONLY FOR DESCRIPTION PURPOSES.

SN6/SN7/SK7/NA7/ST7 TYPE

CHEEFT NUMBER	1038

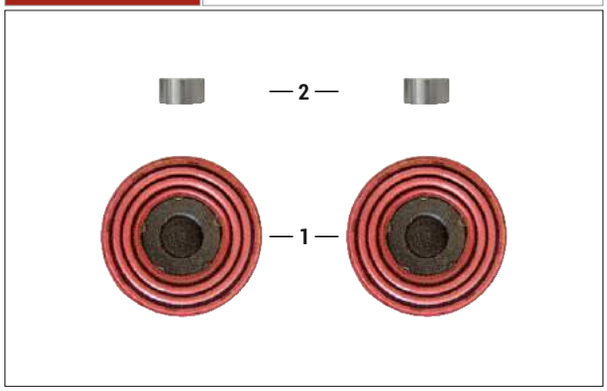

Caliper Piston Tappet Repair Kit

OEM NUMBER	

NR	CHEEFT NR	DESCRIPTIONS	DIMENSION	QTY
1	1534	TAPPET & BOOT ASSEMBLY	Ø69 mm	2
2	1520	TAPPET BUSH	Ø18 x Ø16 x 10 mm	2

CHEEFT NUMBER	1127

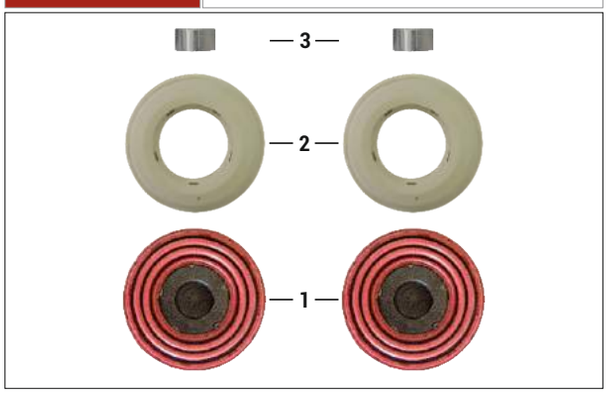

Caliper Piston Tappet & Seals Repair Kit

OEM NUMBER	K001300 - K010603 - K000366 - K092079 - MB 000 420 2382 000 420 4082 - 000 420 4982 - MN 81.50822.6020 - 81.50822.6031 SCN 1723417 - 2121858 - 2198394 - DF 1622785 - 1616894 1689313 - IVECO 42541413 - B.V 09.801.06.32.0 - SF 3 434 3814 00 SCHMITZ 1008451 - HNDRCKSN S-29152-6

NR	CHEEFT NR	DESCRIPTIONS	DIMENSION	QTY
1	1534	TAPPET & BOOT ASSEMBLY	Ø69 mm	2
2	1538	INNER SEAL		2
3	1520	TAPPET BUSH	Ø18 x Ø16 x 10 mm	2

CHEEFT NUMBER	1223

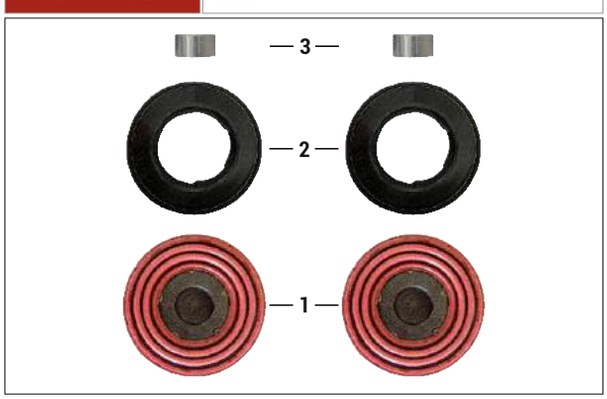

Caliper Piston Tappet & Seals Repair Kit

OEM NUMBER	(PLATE LOCKING)

NR	CHEEFT NR	DESCRIPTIONS	DIMENSION	QTY
1	1534	TAPPET & BOOT ASSEMBLY	Ø69 mm	2
2	1648	INNER SEAL BLACK (PLATE LOCKING)		2
3	1520	TAPPET BUSH	Ø18 x Ø16 x 10 mm	2

ORIGINAL PART NUMBERS,MARKS AND MODELS MENTIONED ARE ONLY FOR DESCRIPTION PURPOSES.

SN6/SN7/SK7/NA7/ST7 TYPE

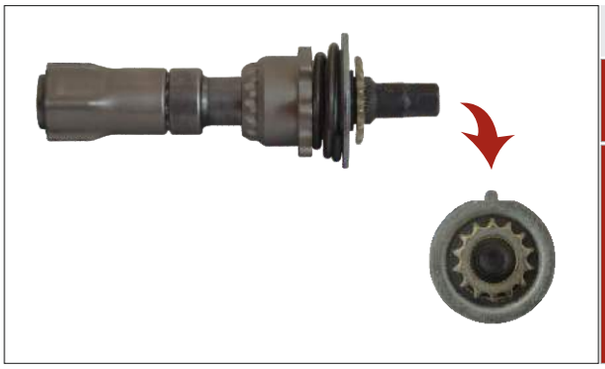

Caliper Adjusting Mechanism	
CHEEFT NUMBER	1029
OEM NUMBER	

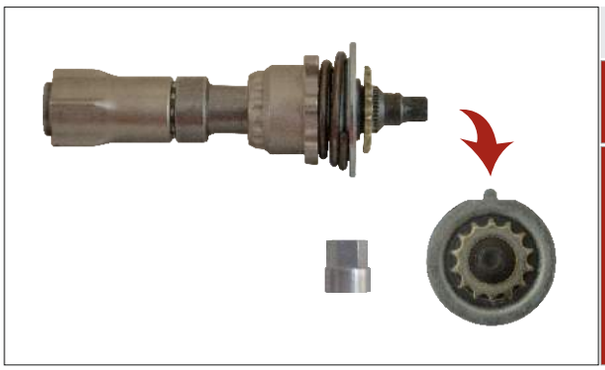

Caliper Adjusting Mechanism (Orig. Type)	
CHEEFT NUMBER	1209
OEM NUMBER	

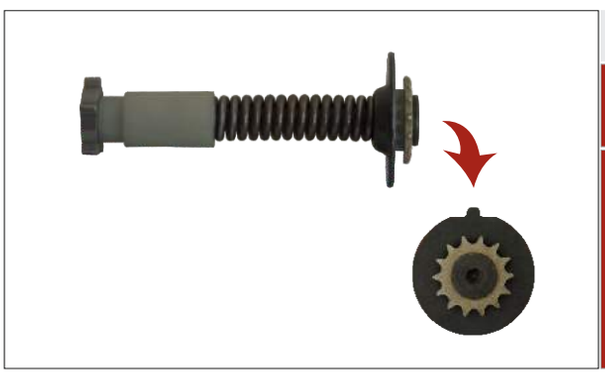

Caliper Adjusting Shaft (With Spring)	
CHEEFT NUMBER	1030
OEM NUMBER	

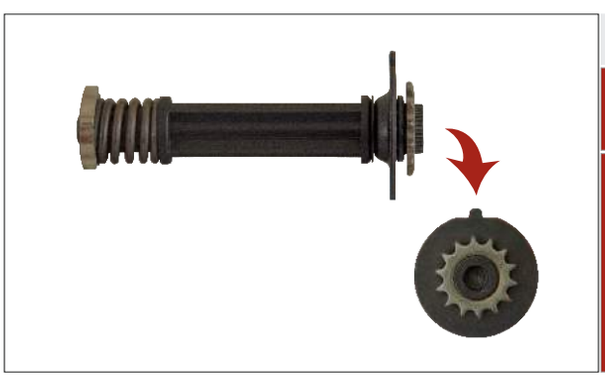

Mechanism With Spring New Type	
CHEEFT NUMBER	1222
OEM NUMBER	

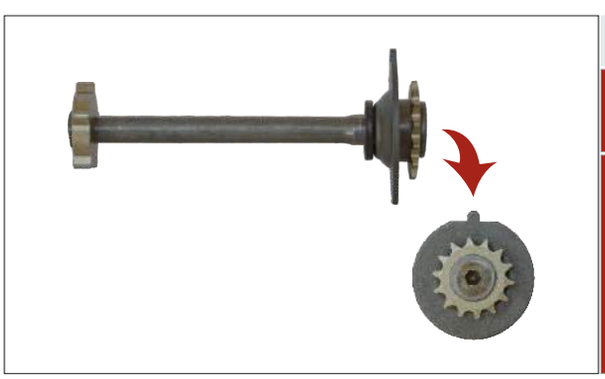

Caliper Adjusting Shaft (Without Spring)	
CHEEFT NUMBER	1105
OEM NUMBER	

ORIGINAL PART NUMBERS,MARKS AND MODELS MENTIONED ARE ONLY FOR DESCRIPTION PURPOSES.

SN6/SN7/SK7/NA7/ST7 TYPE

CHEEFT NUMBER	1201

Caliper Adjusting Mechanisms Kit

OEM NUMBER	

NR	CHEEFT NR	DESCRIPTIONS	DIMENSION	QTY
1	1029	ADJUSTING MECHANISM		1
2	1030	ADJUSTING SHAFT (WITH SPRING)		1
3	1031	CHAIN (29 LINKS)		1

CHEEFT NUMBER	1046

Caliper Cover (With Nut)

OEM NUMBER	

NR	CHEEFT NR	DESCRIPTIONS	DIMENSION	QTY
1	1599	COVER (With Gasket & Nut)		1
2	1573	BOLT	M8 x 16 mm	6
3	1574	BOLT	M8 x 50 mm	2

CHEEFT NUMBER	1045

Caliper Cover

OEM NUMBER	

NR	CHEEFT NR	DESCRIPTIONS	DIMENSION	QTY
1	1596	COVER WITH GASKET		1
2	1573	BOLT	M8 x 16 mm	8

ORIGINAL PART NUMBERS,MARKS AND MODELS MENTIONED ARE ONLY FOR DESCRIPTION PURPOSES.

SN6/SN7/SK7/NA7/ST7 TYPE

CHEEFT NUMBER	1041

Caliper Bridge Assembly

OEM NUMBER	

NR	CHEEFT NR	DESCRIPTIONS	DIMENSION	QTY
1	1571	SPRING	Ø25 x 49 mm	1
2	1592	BRIDGE ASSEMBLY		1

CHEEFT NUMBER	1042

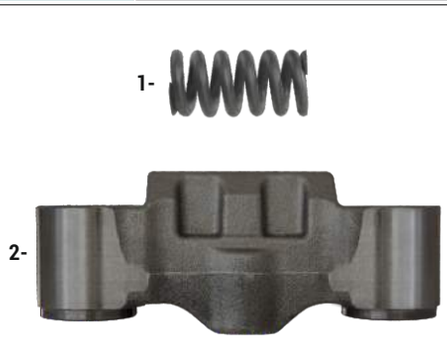

Caliper Bridge Assembly

OEM NUMBER	

NR	CHEEFT NR	DESCRIPTIONS	DIMENSION	QTY
1	1571	SPRING	Ø25 x 49 mm	1
2	1593	BRIDGE ASSEMBLY		1

CHEEFT NUMBER	1100

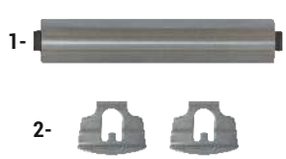

Caliper Shaft Housing Pin & Clamp Repair Kit

OEM NUMBER	

NR	CHEEFT NR	DESCRIPTIONS	DIMENSION	QTY
1	1701	SHAFT HOUSING PIN		1
2	1700	SHAFT HOUSING CLAMP		2

ORIGINAL PART NUMBERS,MARKS AND MODELS MENTIONED ARE ONLY FOR DESCRIPTION PURPOSES.

SN6/SN7/SK7/NA7/ST7 TYPE

CHEEFT NUMBER	1182

Caliper Lever Bearing Kit

OEM NUMBER	

NR	CHEEFT NR	DESCRIPTIONS	DIMENSION	QTY
1	1597	CALIPER LEVER BEARING		5

CHEEFT NUMBER	1010

Caliper Adjusting Mechanism Adapter Kit

OEM NUMBER	Z001548 - HNDRCKSN S-29152-5

NR	CHEEFT NR	DESCRIPTIONS	DIMENSION	QTY
1	1563	MECHANISM ADAPTER		5

CHEEFT NUMBER	1011

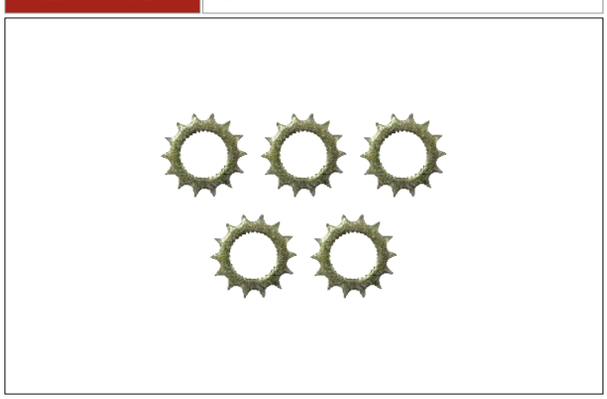

Caliper Adjusting Mechanism Wheel Kit

OEM NUMBER	

NR	CHEEFT NR	DESCRIPTIONS	DIMENSION	QTY
1	1564	ADJUSTING MECHANISM WHEEL		5

ORIGINAL PART NUMBERS,MARKS AND MODELS MENTIONED ARE ONLY FOR DESCRIPTION PURPOSES.

SN6/SN7/SK7/NA7/ST7 TYPE

Caliper Roller Bearings	
CHEEFT NUMBER	1005
OEM NUMBER	

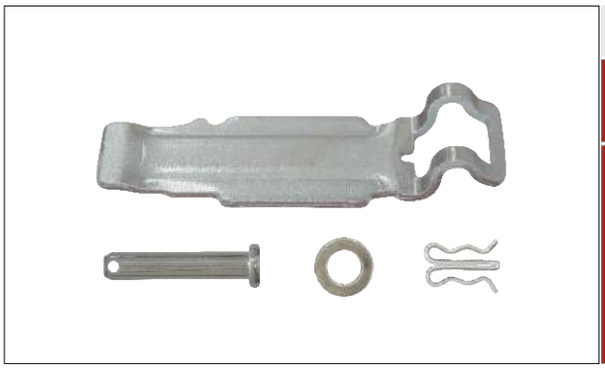

Caliper Pad Retainer Repair Kit	
CHEEFT NUMBER	1028
OEM NUMBER	K000133 - MB 000 420 2582

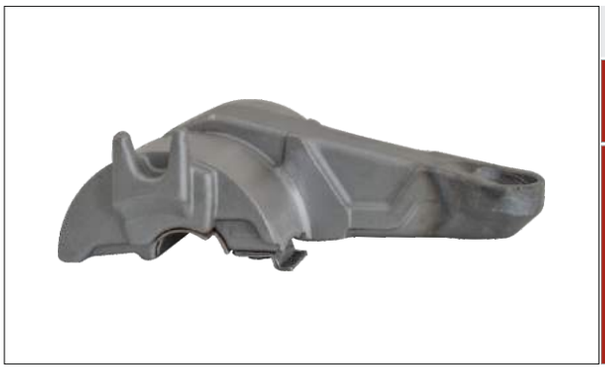

Caliper Lever (Angle 0° - 113 mm)	
CHEEFT NUMBER	1044
OEM NUMBER	Z002881

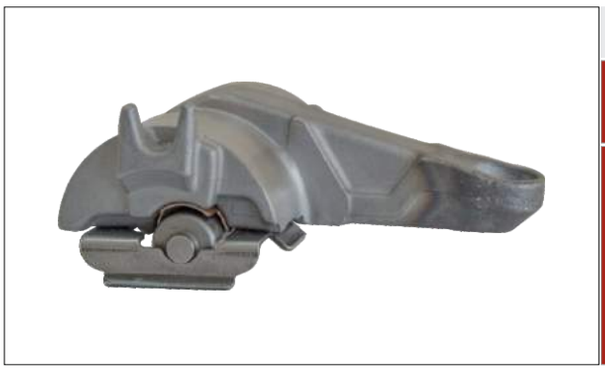

Caliper Lever (Angle 0° - 113 mm)	
CHEEFT NUMBER	1178
OEM NUMBER	Z002881

Caliper Lever (Angle 0° - 126 mm)	
CHEEFT NUMBER	1043
OEM NUMBER	Z002965

ORIGINAL PART NUMBERS,MARKS AND MODELS MENTIONED ARE ONLY FOR DESCRIPTION PURPOSES.

SN6/SN7/SK7/NA7/ST7 TYPE

Caliper Lever (Angle 12° - 122 mm)	
CHEEFT NUMBER	1179
OEM NUMBER	

Caliper Lever (Angle 12° - 123 mm)	
CHEEFT NUMBER	1176
OEM NUMBER	Z002962

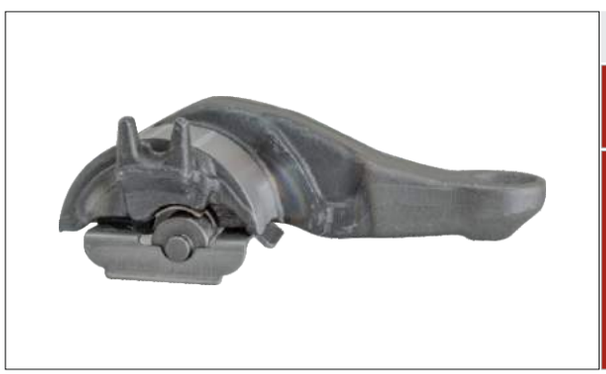

Caliper Lever	
CHEEFT NUMBER	1058
OEM NUMBER	

CHEEFT NUMBER	1019

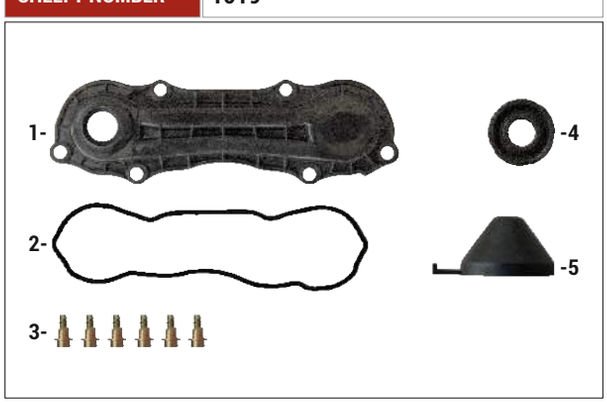

Caliper Plastic Cover (Without Sensor)	
OEM NUMBER	

NR	CHEEFT NR	DESCRIPTIONS	DIMENSION	QTY
1	1546	PLASTIC COVER		1
2	1554	SENSOR COVER SEAL		1
3	1575	SCREW WITH RIVET		6
4	1550	SEAL		1
5	1557	PLASTIC COVER CAP	Ø38 mm	1

ORIGINAL PART NUMBERS,MARKS AND MODELS MENTIONED ARE ONLY FOR DESCRIPTION PURPOSES.

SN6/SN7/SK7/NA7/ST7 TYPE

CHEEFT NUMBER	1033

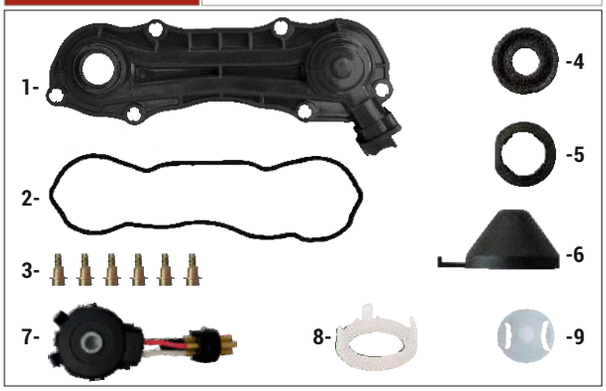

Caliper Sensor Cover (2 Cables Sensor)

OEM NUMBER	

NR	CHEEFT NR	DESCRIPTIONS	DIMENSION	QTY
1	1583	PLASTIC COVER (WITH HOLE)		1
2	1554	SENSOR COVER SEAL		1
3	1575	SCREW WITH RIVET		6
4	1550	SEAL		1
5	1600	CALIPER PLASTIC COVER RING		1
6	1557	PLASTIC COVER CAP	Ø38 mm	1
7	1547	2 CABLES SENSOR		1
8	1647	SENSOR STABILIZER PLASTIC		1
9	1559	SENSOR ADJUSTER PLASTIC	5,3 mm	1

CHEEFT NUMBER	1070

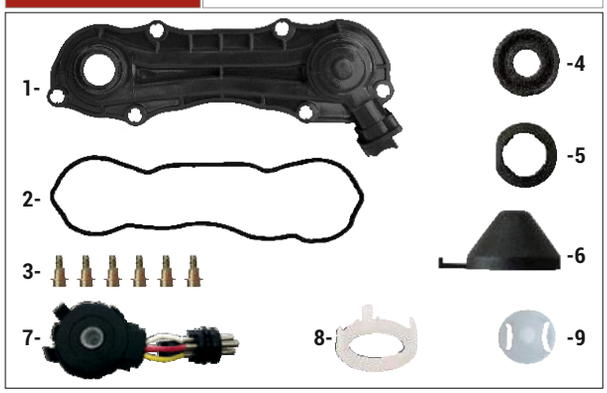

Caliper Sensor Cover (3 Cables Sensor)

OEM NUMBER	MB

NR	CHEEFT NR	DESCRIPTIONS	DIMENSION	QTY
1	1583	PLASTIC COVER (WITH HOLE)		1
2	1554	SENSOR COVER SEAL		1
3	1575	SCREW WITH RIVET		6
4	1550	SEAL		1
5	1600	CALIPER PLASTIC COVER RING		1
6	1557	PLASTIC COVER CAP	Ø38 mm	1
7	1587	3 CABLES SENSOR (FOR MB)		1
8	1647	SENSOR STABILIZER PLASTIC		1
9	1559	SENSOR ADJUSTER PLASTIC	5,3 mm	1

CHEEFT NUMBER	1074

Caliper Sensor Cover (3 Cables Sensor)

OEM NUMBER	MN TGA

NR	CHEEFT NR	DESCRIPTIONS	DIMENSION	QTY
1	1583	PLASTIC COVER (WITH HOLE)		1
2	1554	SENSOR COVER SEAL		1
3	1575	SCREW WITH RIVET		6
4	1550	SEAL		1
5	1600	CALIPER PLASTIC COVER RING		1
6	1557	PLASTIC COVER CAP	Ø38 mm	1
7	1588	3 CABLES SENSOR(FOR MN)		1
8	1647	SENSOR STABILIZER PLASTIC		1
9	1559	SENSOR ADJUSTER PLASTIC	5,3 mm	1

ORIGINAL PART NUMBERS,MARKS AND MODELS MENTIONED ARE ONLY FOR DESCRIPTION PURPOSES.

SN6/SN7/SK7/NA7/ST7 TYPE

CHEEFT NUMBER	1020

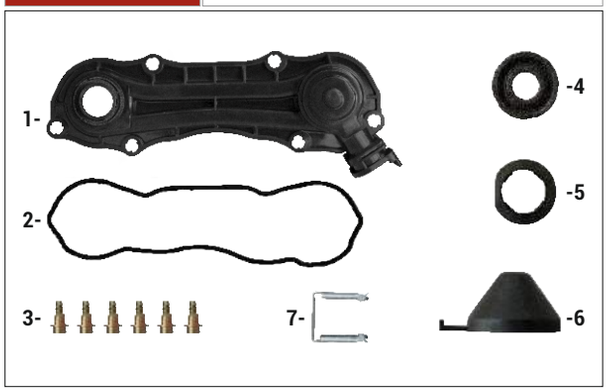

Caliper Plastic Cover (Without Sensor)

OEM NUMBER	

NR	CHEEFT NR	DESCRIPTIONS	DIMENSION	QTY
1	1548	PLASTIC COVER (WITH HOLE)		1
2	1554	SENSOR COVER SEAL		1
3	1575	SCREW WITH RIVET		6
4	1550	SEAL		1
5	1600	CALIPER PLASTIC COVER RING		1
6	1557	PLASTIC COVER CAP	Ø38 mm	1
7	1605	COVER CLIPS		1

CHEEFT NUMBER	1021

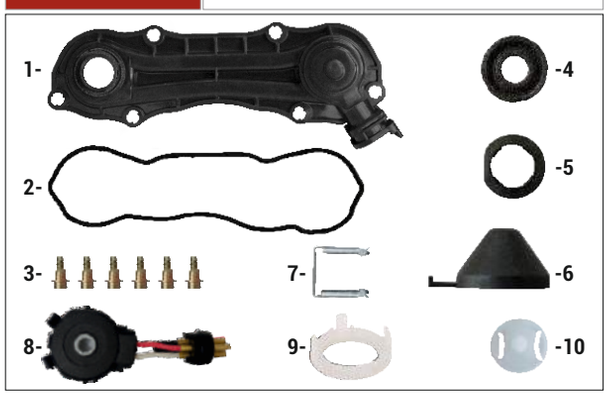

Caliper Sensor Cover (2 Cables Sensor)

OEM NUMBER	

NR	CHEEFT NR	DESCRIPTIONS	DIMENSION	QTY
1	1548	PLASTIC COVER (WITH HOLE)		1
2	1554	SENSOR COVER SEAL		1
3	1575	SCREW WITH RIVET		6
4	1550	SEAL		1
5	1600	CALIPER PLASTIC COVER RING		1
6	1557	PLASTIC COVER CAP	Ø38 mm	1
7	1605	COVER CLIPS		1
8	1547	2 CABLES SENSOR		1
9	1647	SENSOR STABILIZER PLASTIC		1
10	1559	SENSOR ADJUSTER PLASTIC	5,3 mm	1

CHEEFT NUMBER	1071

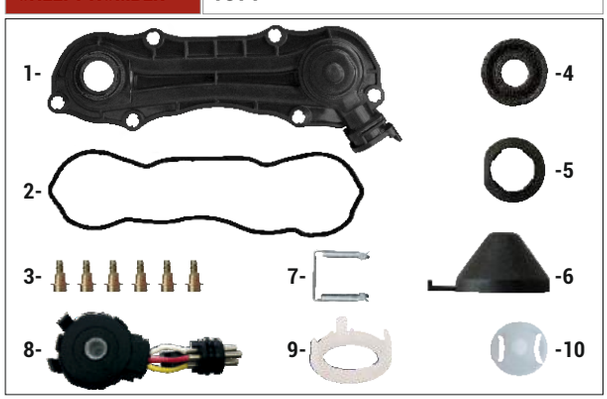

Caliper Sensor Cover (3 Cables Sensor)

OEM NUMBER	MB

NR	CHEEFT NR	DESCRIPTIONS	DIMENSION	QTY
1	1548	PLASTIC COVER (WITH HOLE)		1
2	1554	SENSOR COVER SEAL		1
3	1575	SCREW WITH RIVET		6
4	1550	SEAL		1
5	1600	CALIPER PLASTIC COVER RING		1
6	1557	PLASTIC COVER CAP	Ø38 mm	1
7	1605	COVER CLIPS		1
8	1587	3 CABLES SENSOR (FOR MB)		1
9	1647	SENSOR STABILIZER PLASTIC		1
10	1559	SENSOR ADJUSTER PLASTIC	5,3 mm	1

ORIGINAL PART NUMBERS,MARKS AND MODELS MENTIONED ARE ONLY FOR DESCRIPTION PURPOSES.

SN6/SN7/SK7/NA7/ST7 TYPE

CHEEFT NUMBER	1079

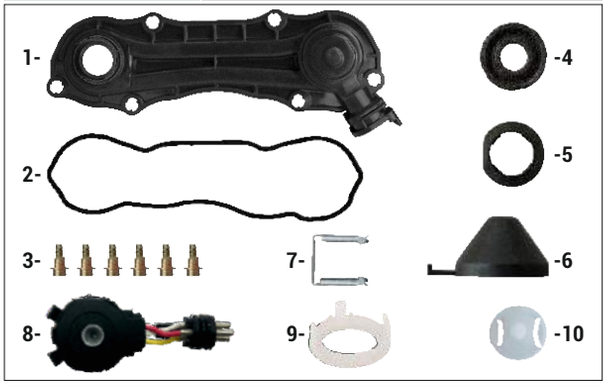

Caliper Sensor Cover (3 Cables Sensor)

OEM NUMBER	MN

NR	CHEEFT NR	DESCRIPTIONS	DIMENSION	QTY
1	1548	PLASTIC COVER (WITH HOLE)		1
2	1554	SENSOR COVER SEAL		1
3	1575	SCREW WITH RIVET		6
4	1550	SEAL		1
5	1600	CALIPER PLASTIC COVER RING		1
6	1557	PLASTIC COVER CAP	Ø38 mm	1
7	1605	COVER CLIPS		1
8	1588	3 CABLES SENSOR (FOR MN)		1
9	1647	SENSOR STABILIZER PLASTIC		1
10	1559	SENSOR ADJUSTER PLASTIC	5,3 mm	1

CHEEFT NUMBER	1159

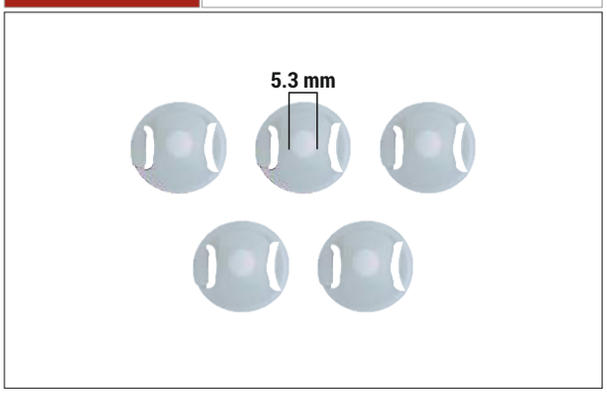

Sensor Adjuster Plastic Kit

OEM NUMBER	

NR	CHEEFT NR	DESCRIPTIONS	DIMENSION	QTY
1	1559	SENSOR ADJUSTER PLASTIC	5,3 mm	5

CHEEFT NUMBER	1166

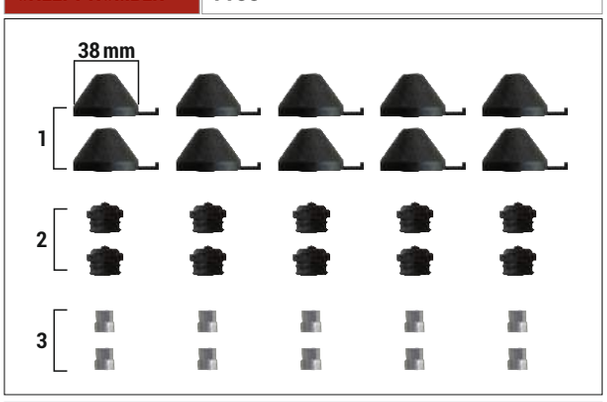

Caliper Plastic Cover Cap Kit

OEM NUMBER	K000945 - MN 81.50822.6024 - SCN 2121868 DF 1439493 - SF 8 531 7002 500

NR	CHEEFT NR	DESCRIPTIONS	DIMENSION	QTY
1	1557	PLASTIC COVER CAP	Ø38 mm	10
2	1558	PLASTIC COVER CAP		10
3	1563	ADJUSTING MECHANISM ADAPTER		10

ORIGINAL PART NUMBERS,MARKS AND MODELS MENTIONED ARE ONLY FOR DESCRIPTION PURPOSES.

SN6/SN7/SK7/NA7/ST7 TYPE

CHEEFT NUMBER	1167

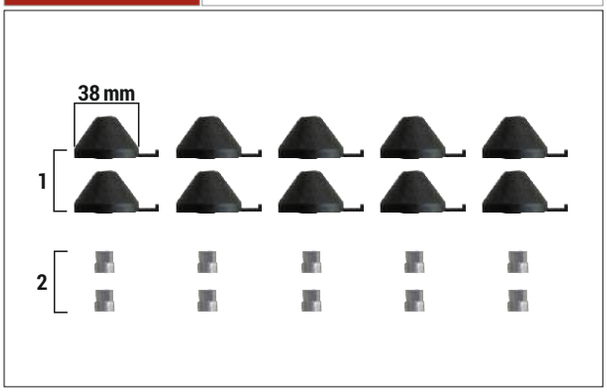

Caliper Plastic Cover Cap Kit

OEM NUMBER	

NR	CHEEFT NR	DESCRIPTIONS	DIMENSION	QTY
1	1557	PLASTIC COVER CAP	Ø38 mm	10
2	1563	ADJUSTING MECHANISM ADAPTER		10

CHEEFT NUMBER	1187

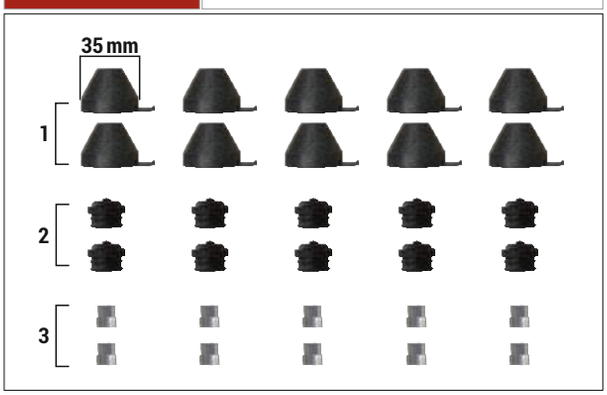

Caliper Plastic Cover Cap Kit

OEM NUMBER	

NR	CHEEFT NR	DESCRIPTIONS	DIMENSION	QTY
1	1561	PLASTIC COVER CAP	Ø35 mm	10
2	1558	PLASTIC COVER CAP		10
3	1563	ADJUSTING MECHANISM ADAPTER		10

CHEEFT NUMBER	1188

Caliper Plastic Cover Cap Kit

OEM NUMBER	K003902 - MB 000 420 3248 - SCN 2121869 2198536 - OTHER MODEL ADB22X BNDX 802643 - SCHMITZ 1008453

NR	CHEEFT NR	DESCRIPTIONS	DIMENSION	QTY
1	1561	PLASTIC COVER CAP	Ø35 mm	10
2	1563	ADJUSTING MECHANISM ADAPTER		10

ORIGINAL PART NUMBERS,MARKS AND MODELS MENTIONED ARE ONLY FOR DESCRIPTION PURPOSES.

SN6/SN7/SK7/NA7/ST7 TYPE

CHEEFT NUMBER	1207

Caliper Actuator Seal Kit

OEM NUMBER	

NR	CHEEFT NR	DESCRIPTIONS	DIMENSION	QTY
1	1623	CALIPER ACTUATOR SEAL	Ø42 mm	5

CHEEFT NUMBER	1208

Caliper Actuator Seal Kit

OEM NUMBER	

NR	CHEEFT NR	DESCRIPTIONS	DIMENSION	QTY
1	1624	CALIPER ACTUATOR SEAL	Ø45 mm	5

CHEEFT NUMBER	1068

Caliper Plug Kit

OEM NUMBER	

NR	CHEEFT NR	DESCRIPTIONS	DIMENSION	QTY
1	1586	PLUG	Ø 55/50 x 11 mm	5

ORIGINAL PART NUMBERS,MARKS AND MODELS MENTIONED ARE ONLY FOR DESCRIPTION PURPOSES.

SN6/SN7/SK7/NA7/ST7 TYPE

CHEEFT NUMBER	1098

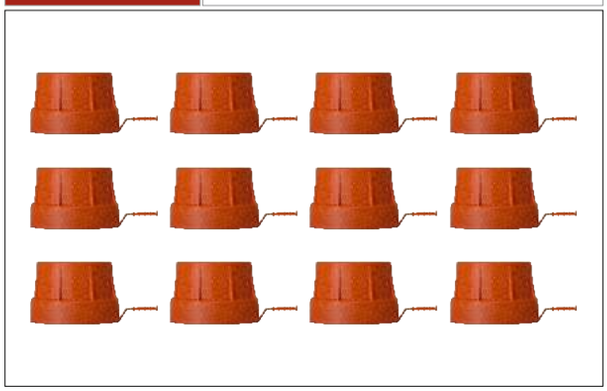

Rubber Bush Cap Kit (Short)

OEM NUMBER	

NR	CHEEFT NR	DESCRIPTIONS	DIMENSION	QTY
1	1661	RUBBER BUSH CAP (SHORT)		12

CHEEFT NUMBER	1099

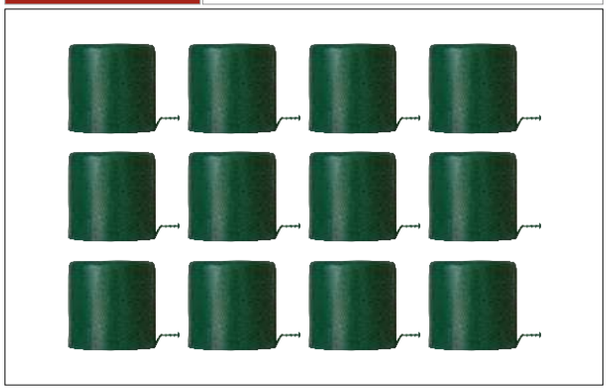

Rubber Bush Cap Kit (Long)

OEM NUMBER	

NR	CHEEFT NR	DESCRIPTIONS	DIMENSION	QTY
1	1662	RUBBER BUSH CAP (LONG)		12

CHEEFT NUMBER	1218

Sensor Rod Kit (Small)

OEM NUMBER	

NR	CHEEFT NR	DESCRIPTIONS	DIMENSION	QTY
1	1646	SENSOR ROD (SMALL)		5

ORIGINAL PART NUMBERS,MARKS AND MODELS MENTIONED ARE ONLY FOR DESCRIPTION PURPOSES.

SN6/SN7/SK7/NA7/ST7 TYPE

CHEEFT NUMBER	1150

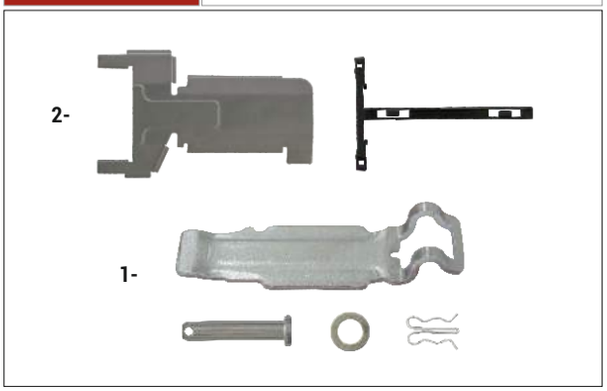

Brake Pad Retainer Repair Kit

OEM NUMBER	

NR	CHEEFT NR	DESCRIPTIONS	DIMENSION	QTY
1	1028	PAD RETAINER REPAIR KIT		1
2	1148	CABLO PROTECTION KIT		1

CHEEFT NUMBER	1151

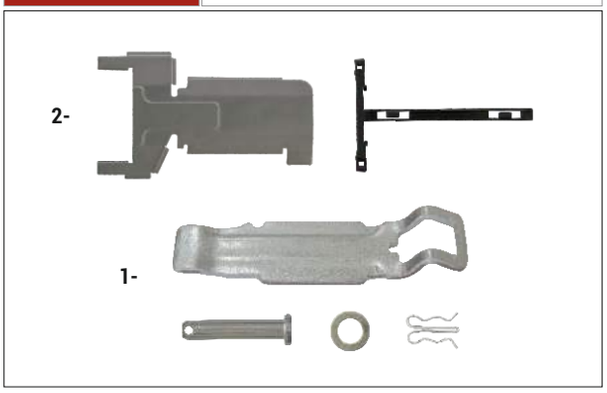

Brake Pad Retainer Repair Kit

OEM NUMBER	K000884

NR	CHEEFT NR	DESCRIPTIONS	DIMENSION	QTY
1	1060	PAD RETAINER REPAIR KIT		1
2	1148	CABLO PROTECTION KIT		1

CHEEFT NUMBER	1199

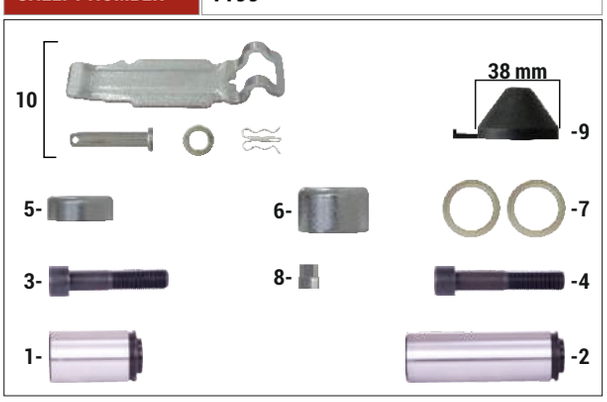

Caliper Guides & Seals Repair Kit

OEM NUMBER	K013007

NR	CHEEFT NR	DESCRIPTIONS	DIMENSION	QTY
1	1504	GUIDE PIN	Ø36 x 64 mm	1
2	1505	GUIDE PIN	Ø36 x 113,70 mm	1
3	1511	BOLT	M16 x 1,5 x 70 mm	1
4	1514	BOLT	M16 x 1,5 x 85 mm	1
5	1543	STEEL CAP	Ø40 x 14,5 mm	1
6	1544	STEEL CAP	Ø40 x 25 mm	1
7	1551	INNER BOOT RING		2
8	1563	ADJUSTING MECHANISM ADAPTER		1
9	1557	PLASTIC COVER CAP	Ø38 mm	1
10	1028	CALIPER PAD RETAINER REPAIR KIT		1

ORIGINAL PART NUMBERS,MARKS AND MODELS MENTIONED ARE ONLY FOR DESCRIPTION PURPOSES.

SN6/SN7/SK7/NA7/ST7 TYPE

CHEEFT NUMBER	1158

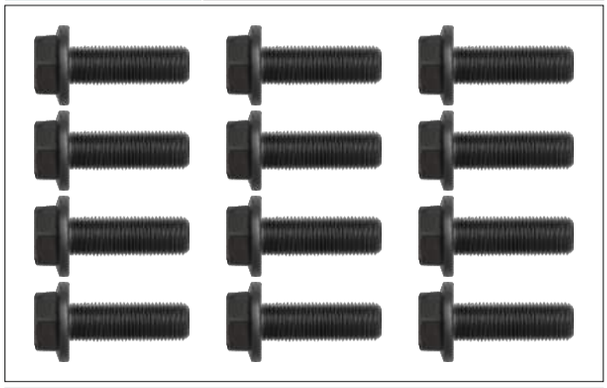

Caliper Connecting Bolt Kit

OEM NUMBER	

NR	CHEEFT NR	DESCRIPTIONS	DIMENSION	QTY
1	1665	BOLT	M16 x 1,5 x 50 mm	12

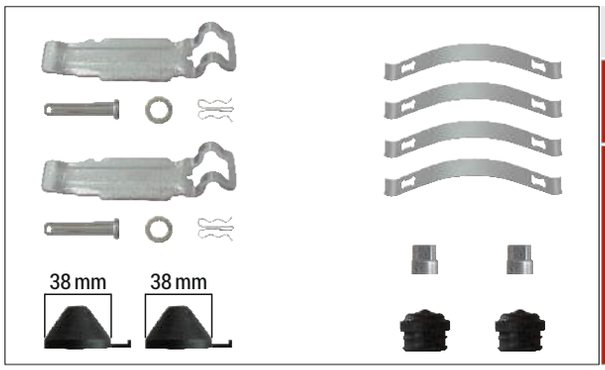

Caliper Pad Retainer Repair Kit

CHEEFT NUMBER	1051
OEM NUMBER	

Caliper Chain (29 links)

CHEEFT NUMBER	1031
OEM NUMBER	

Caliper Calibration Bolt

CHEEFT NUMBER	1008
OEM NUMBER	

ORIGINAL PART NUMBERS,MARKS AND MODELS MENTIONED ARE ONLY FOR DESCRIPTION PURPOSES.

SN6/SN7/SK7/NA7/ST7 TYPE

SCN SET

CHEEFT NUMBER	CHS1004

NR	CHEEFT NR	DESCRIPTIONS	QTY
1	1164	CALIPER GUIDES & SEALS REPAIR KIT	1
2	1042	CALIPER BRIDGE ASSEMBLY	1
3	1127	PISTONS & SEALS REPAIR KIT (Ø69 mm)	1
4	1029	CALIPER ADJUSTING MECHANISM	1
5	1030	CALIPER ADJUSTING SHAFT (WITH SPRING)	1
6	1031	CALIPER CHAIN (29 LINKS)	1
7	1168	CALIPER ROLLER BEARINGS	1
8	1008	CALIPER CALIBRATION BOLT	2
9	1045	CALIPER COVER	1

ACTRS B.V SET (NEW MODEL)

CHEEFT NUMBER	CHS1006

NR	CHEEFT NR	DESCRIPTIONS	QTY
1	1039	CALIPER GUIDES & SEALS REPAIR KIT	1
2	1041	CALIPER BRIDGE ASSEMBLY	1
3	1127	PISTONS & SEALS REPAIR KIT (Ø69 mm)	1
4	1030	CALIPER ADJUSTING SHAFT (WITH SPRING)	1
5	1029	CALIPER ADJUSTING MECHANISM	1
6	1031	CALIPER CHAIN (29 LINKS)	1
7	1005	CALIPER ROLLER BEARINGS	1
8	1008	CALIPER CALIBRATION BOLT	2
9	1045	CALIPER COVER	1

ORIGINAL PART NUMBERS,MARKS AND MODELS MENTIONED ARE ONLY FOR DESCRIPTION PURPOSES.

SN6/SN7/SK7/NA7/ST7 TYPE

ACTRS B.V SET (OLD MODEL)

CHEEFT NUMBER CHS1007

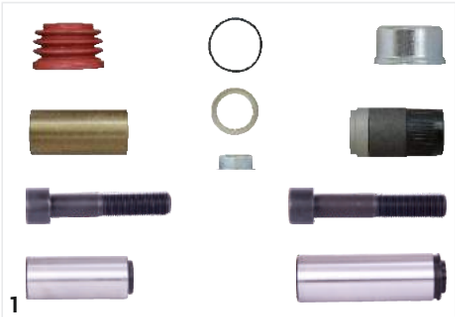

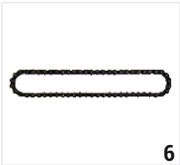

NR	CHEEFT NR	DESCRIPTIONS	QTY
1	1003	CALIPER GUIDES & SEALS REPAIR KIT	1
2	1042	CALIPER BRIDGE ASSEMBLY	1
3	1127	PISTONS & SEALS REPAIR KIT (Ø69 mm)	1
4	1029	CALIPER ADJUSTING MECHANISM	1
5	1030	CALIPER ADJUSTING SHAFT (WITH SPRING)	1
6	1031	CALIPER CHAIN (29 LINKS)	1
7	1168	CALIPER ROLLER BEARINGS	1
8	1008	CALIPER CALIBRATION BOLT	2
9	1045	CALIPER COVER	1

AXR SET (NEW MODEL)

CHEEFT NUMBER CHS1008

NR	CHEEFT NR	DESCRIPTIONS	QTY
1	1040	CALIPER GUIDES & SEALS REPAIR KIT	1
2	1029	CALIPER ADJUSTING MECHANISM	1
3	1030	CALIPER ADJUSTING SHAFT (WITH SPRING)	1
4	1041	CALIPER BRIDGE ASSEMBLY	1
5	1031	CALIPER CHAIN (29 LINKS)	1
6	1005	CALIPER ROLLER BEARINGS	1
7	1008	CALIPER CALIBRATION BOLT	2
8	1016	PISTONS & SEALS REPAIR KIT (Ø74 mm)	1

ORIGINAL PART NUMBERS,MARKS AND MODELS MENTIONED ARE ONLY FOR DESCRIPTION PURPOSES.

SN6/SN7/SK7/NA7/ST7 TYPE

ST7 REPAIR SET	CHEEFT NUMBER	CHS1010

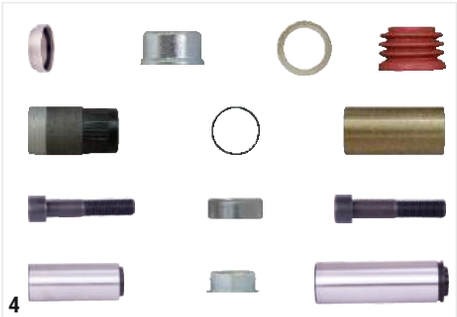

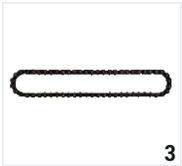

NR	CHEEFT NR	DESCRIPTIONS	QTY
1	1008	CALIPER CALIBRATION BOLT	2
2	1029	CALIPER ADJUSTING MECHANISM	1
3	1031	CALIPER CHAIN (29 LINKS)	1
4	1203	CALIPER GUIDES & SEALS REPAIR KIT	1
5	1042	CALIPER BRIDGE ASSEMBLY	1
6	1045	CALIPER COVER	1
7	1052	CALIPER ADJUSTING SHAFT (WITHOUT SPRING)	1
8	1223	PISTONS & SEALS REPAIR KIT (Ø69 mm)	1
9	1168	CALIPER ROLLER BEARINGS	1

ORIGINAL PART NUMBERS,MARKS AND MODELS MENTIONED ARE ONLY FOR DESCRIPTION PURPOSES.

COHEEFT®

AIR DISC BRAKE CALIPER REPAIR KITS

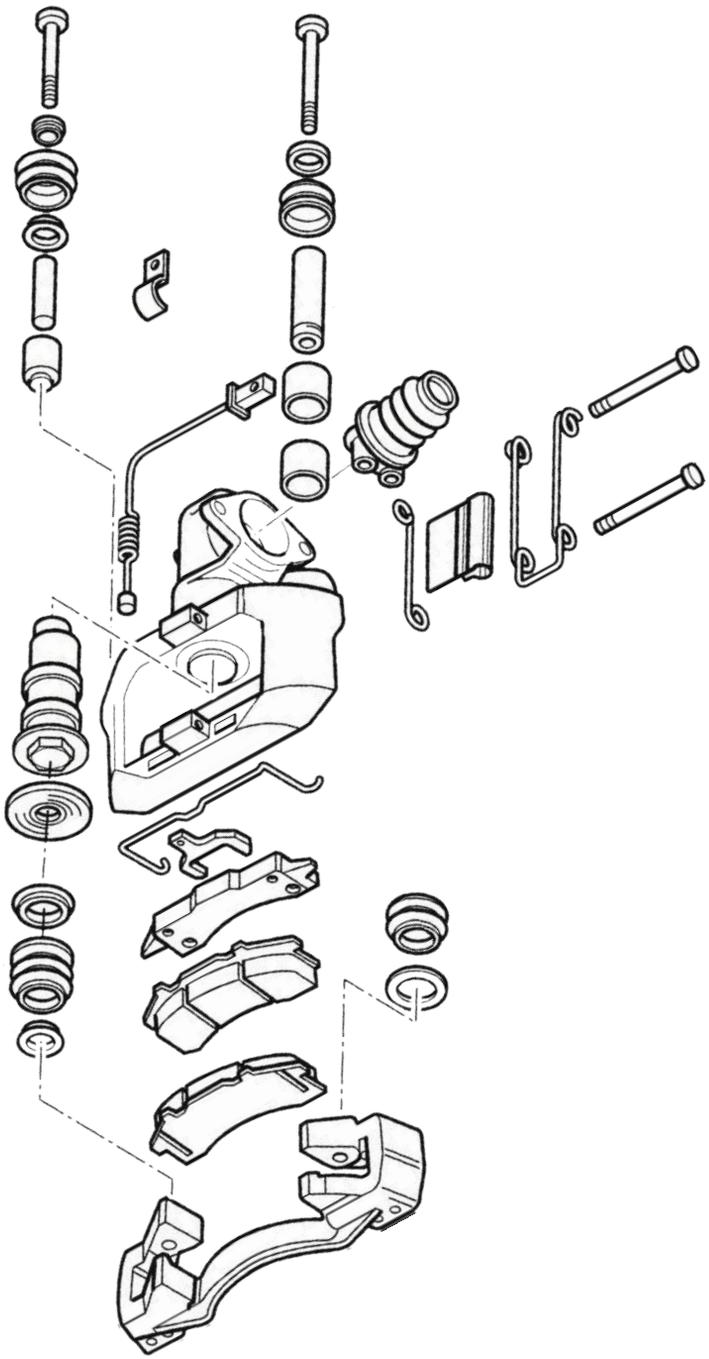

KNR

BENDIX

Always the Best...

EAC CE UDEM JAS-ANZ ISO 9001 2015

BENDIX

CHEEFT NUMBER	1216

Caliper Guides & Seals Repair Kit

OEM NUMBER	381.391 - IVECO 93161189 ADB 3700 - 4300

NR	CHEEFT NR	DESCRIPTIONS	DIMENSION	QTY
1	1633	GUIDE PIN	Ø45 x 150 mm	1
2	1634	GUIDE PIN	Ø23,5 x 92 mm	1
3	1635	BOLT	M22 x 1,5 x 175 mm	1
4	1636	BOLT	M16 x 1,5 x 125 mm	1
5	1637	TEFLON BUSH	Ø45 x Ø40 x 50 mm	2
6	1638	RUBBER BUSH	Ø55 x Ø38 x 24 mm	1

CHEEFT NUMBER	1217

Caliper Plastic Kit

OEM NUMBER	381.413 - IVECO 93161192 ADB 3700 - 4300

NR	CHEEFT NR	DESCRIPTIONS	DIMENSION	QTY
1	1639	TAPPET BOOT	Ø85 mm	1
2	1640	PIN BOOT	Ø71,50 mm	2
3	1641	PIN BOOT		2
4	1642	PLASTIC WASHER		1
5	1643	PIN BOOT RING	Ø36 x 5 mm	2
6	1644	PIN BOOT RING	Ø49 x 5 mm	2
7	1645	WASHER	Ø51 x 3,6 mm	1

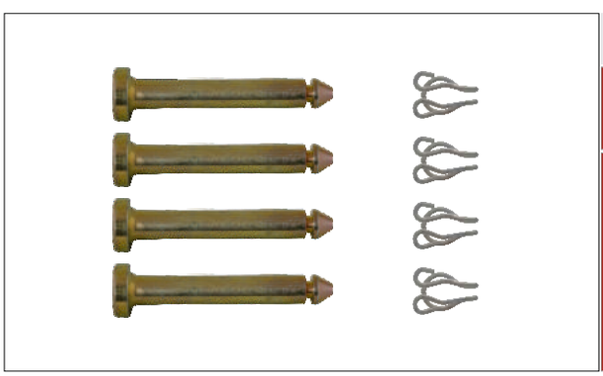

Brake Pad Retainer Bolt Kit

CHEEFT NUMBER	1141
OEM NUMBER	II33692 - ADB 3700 - ADB 4300 IVECO 93161843

ORIGINAL PART NUMBERS,MARKS AND MODELS MENTIONED ARE ONLY FOR DESCRIPTION PURPOSES.

COHEEFT®
AIR DISC BRAKE CALIPER REPAIR KITS

KNR

CARRIERS

Always the Best...

EAC CE UDEM JAS-ANZ ISO 9001 2015

CARRIERS

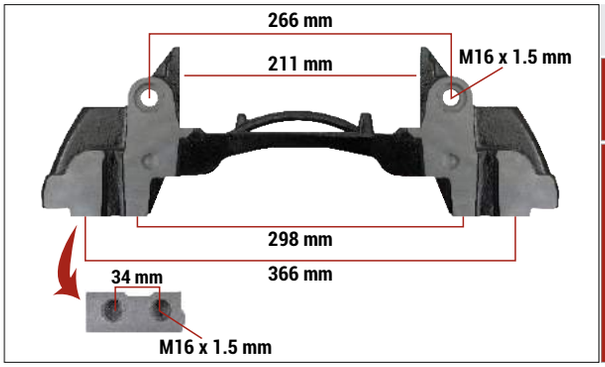

KNR 22,5 Inch B.V Type Caliper Carrier

CHEEFT NUMBER	1211
OEM NUMBER	K012619 - Z006715 - SCN 2379697 B.V 01.303.88.56.0 - B.V Trailer Axle

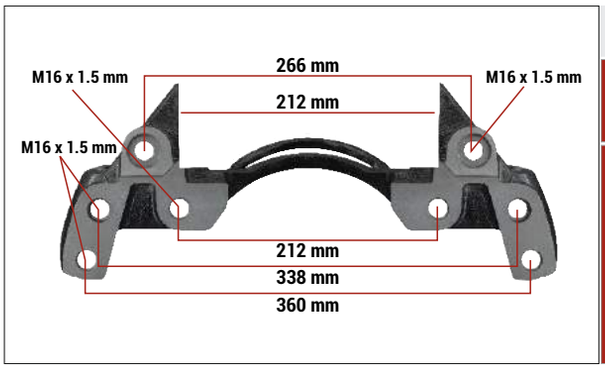

KNR TKR Bus 19,5 Inch Caliper Carrier

CHEEFT NUMBER	1212
OEM NUMBER	

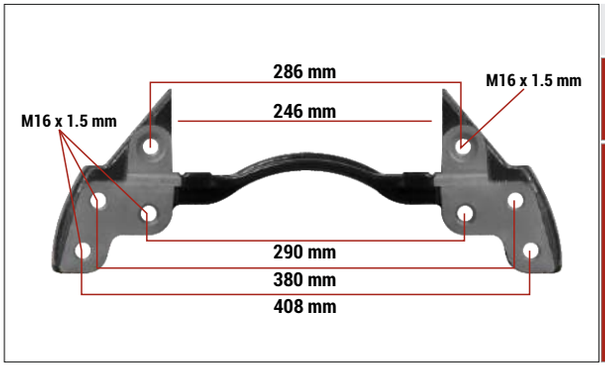

KNR Conecto Bus 22,5 Inch Caliper Carrier (Right-Left)

CHEEFT NUMBER	1213
OEM NUMBER	KNR L-K001529 / R-K001530 MB L-000 421 3706 / R-000 421 3806 (Right-Left) - MB BUS CONNECTO

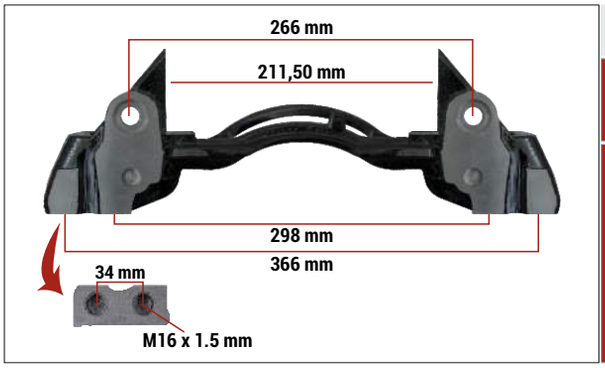

KNR B.V Type 2 Hole 19,5 Inch Caliper Carrier (Right-Left)

CHEEFT NUMBER	1214
OEM NUMBER	KNR K004679 - SCN 2379695 B.V 01.303.88.55.0 - B.V Trailer Axle

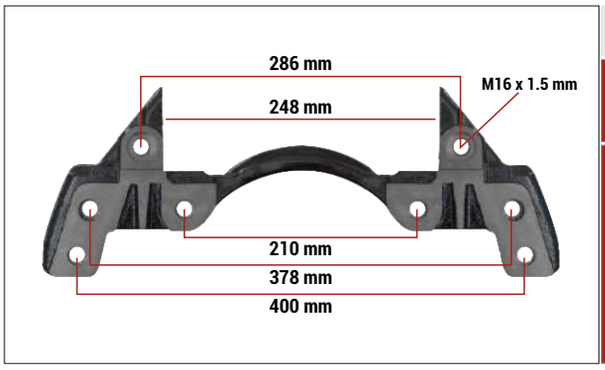

KNR Actrs & AXR 22,5 Inch Caliper Carrier (Right-Left)

CHEEFT NUMBER	1215
OEM NUMBER	KNR K000026 - Z007541 - MB 000 421 1106 SCN 2121591 - MB AXR

ORIGINAL PART NUMBERS,MARKS AND MODELS MENTIONED ARE ONLY FOR DESCRIPTION PURPOSES.

CARRIERS

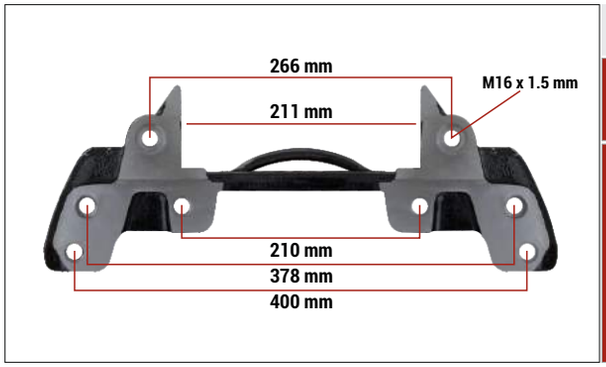

KNR 22,5 Inch SK7 Caliper Carrier

CHEEFT NUMBER	1220
OEM NUMBER	KNR K004099 - SCN 2121600 SF 3 080 0054 01 - 3 080 0055 01 SF Trailer Axle

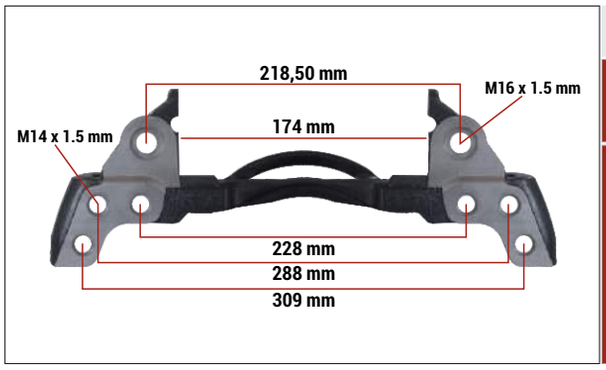

12-160 TGL MN 17,5 Inch Caliper Carrier (Right-Left)

CHEEFT NUMBER	1221
OEM NUMBER	K005606

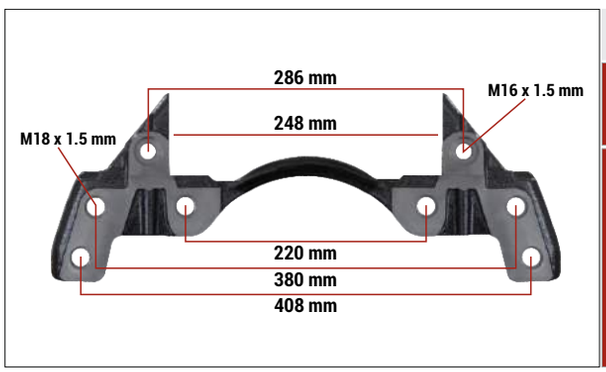

MN TGA 22,5 Inch Caliper Carrier

CHEEFT NUMBER	1228
OEM NUMBER	KNR K001278 - MN TRUCK TGA

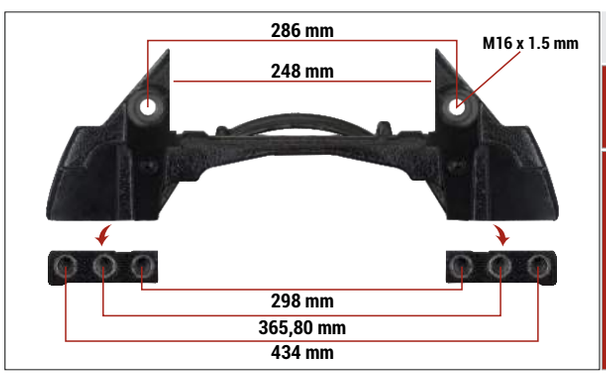

KNR 22,5 Inch B.V Type Caliper Carrier

CHEEFT NUMBER	1229
OEM NUMBER	KNR K004680 - SCN 2379696 B.V 01.303.88.57.0 - B.V Trailer Axle

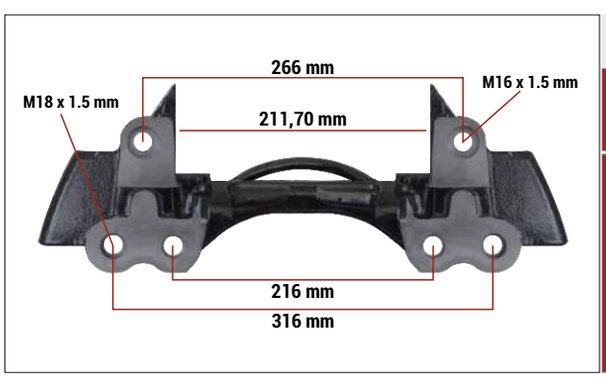

KNR 22,5 Inch Caliper Carrier (For SF Trailer)

CHEEFT NUMBER	1230
OEM NUMBER	KNR K015308 - Z019050 - SF 3 080 0059 00 3 080 0060 00 - SF Trailer Axle

ORIGINAL PART NUMBERS,MARKS AND MODELS MENTIONED ARE ONLY FOR DESCRIPTION PURPOSES.

CARRIERS

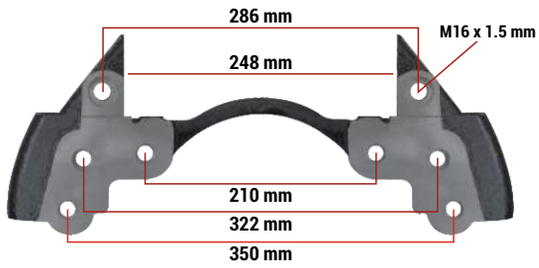

KNR 22,5 Inch Caliper Carrier

CHEEFT NUMBER	1231
OEM NUMBER	KNR K000027 - Z006582 - MB 000 423 0606 SCN 2121592 - MB ACTRS

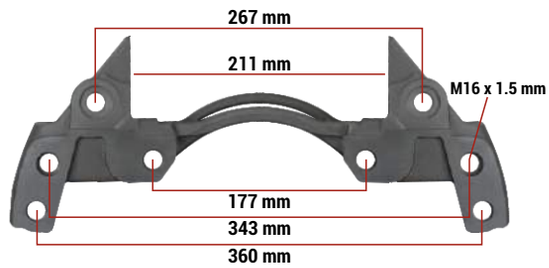

KNR 19,5 Inch ATG Caliper Carrier

CHEEFT NUMBER	1232
OEM NUMBER	KNR Z000702 - K001926 - MB 000 421 3106 MB ATG

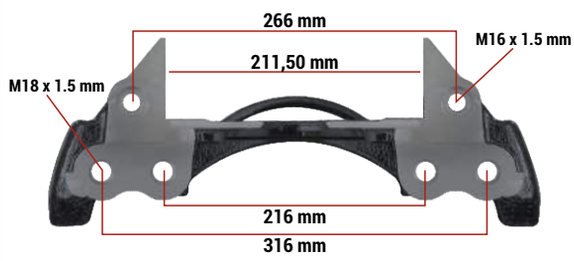

KNR Caliper Carrier 19,5 Inch (Right-Left)

CHEEFT NUMBER	1233
OEM NUMBER	KNR Z019053 - SF - JUMBO

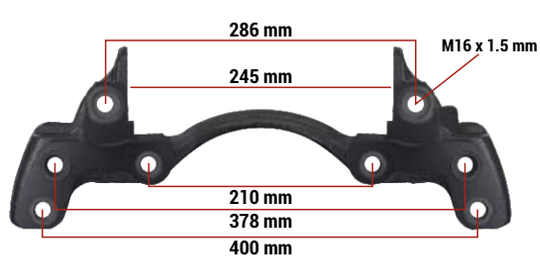

KNR Caliper Carrier 22,5 Inch (Right-Left)

CHEEFT NUMBER	1234
OEM NUMBER	KNR Z046338 - MB 4140 FRONT

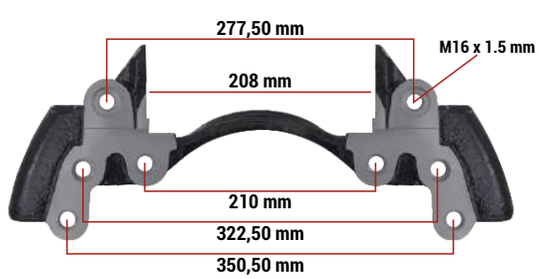

KNR Caliper Carrier 22,5 Inch (Right-Left)

CHEEFT NUMBER	1235
OEM NUMBER	KNR K052379K50 - Z025197 MB 000 423 1006 - MB 4140 REAR

ORIGINAL PART NUMBERS,MARKS AND MODELS MENTIONED ARE ONLY FOR DESCRIPTION PURPOSES.

CARRIERS

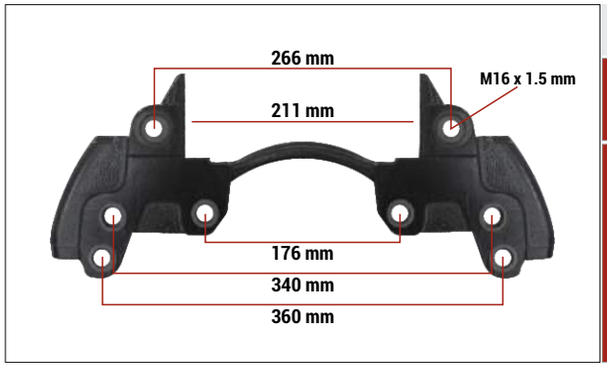

KNR Caliper Carrier 19,5 Inch (Right-Left)

CHEEFT NUMBER	1236
OEM NUMBER	KNR Z017557 - MB AXR

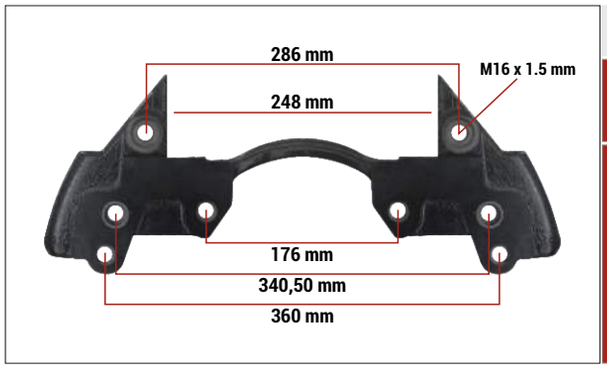

KNR Caliper Carrier 22,5 Inch (Right-Left)

CHEEFT NUMBER	1237
OEM NUMBER	MB TRAILER AXLE

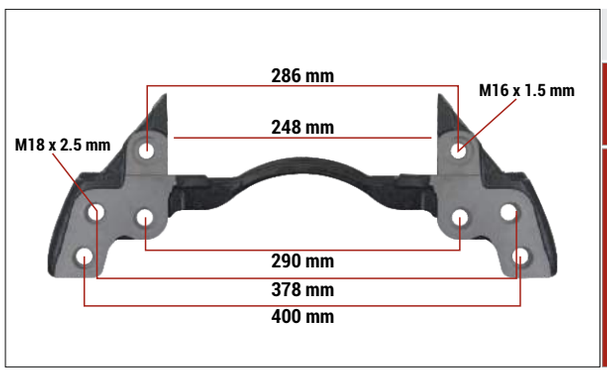

KNR Caliper Carrier 22,5 Inch (Right-Left)

CHEEFT NUMBER	1238
OEM NUMBER	

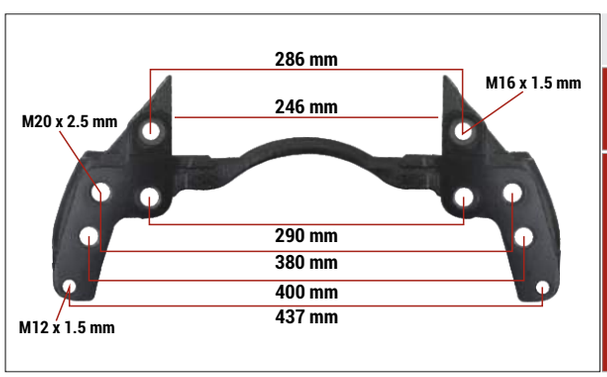

KNR Caliper Carrier 22,5 Inch SCN Old Model (Right-Left)

CHEEFT NUMBER	1239
OEM NUMBER	KNR K010765 - 1756388

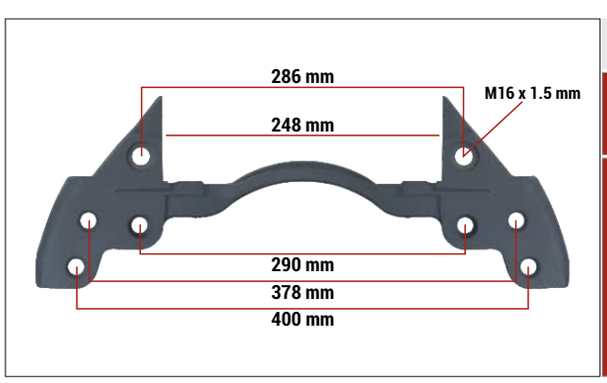

KNR Caliper Carrier 22,5 Inch (Right-Left)

CHEEFT NUMBER	1240
OEM NUMBER	KNR K001337 - KNR SN7138 - DF 1612741

ORIGINAL PART NUMBERS,MARKS AND MODELS MENTIONED ARE ONLY FOR DESCRIPTION PURPOSES.

CARRIERS

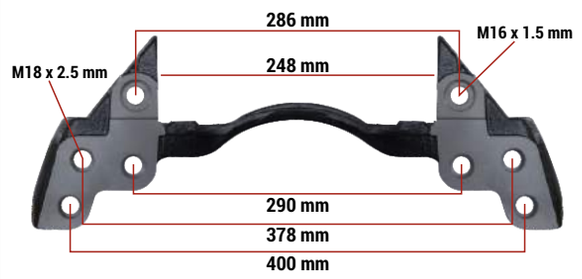

KNR Caliper Carrier 22,5 Inch DF (Right-Left)

CHEEFT NUMBER	1241
OEM NUMBER	KNR K011479 - 1689314 - Z006590 DF LF 55 IV - DF 75 CF / 85 CF - DF CF 65 II / IV DF CF 75 IV - DF CF 85 IV - DF XF 95 DF XF 105

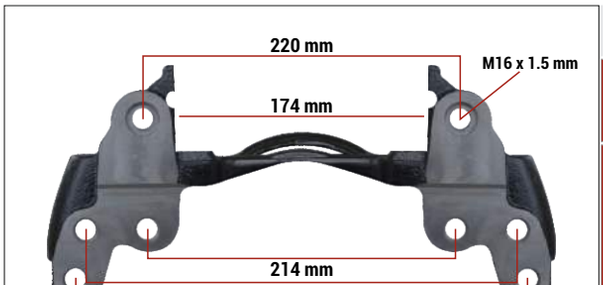

KNR 17,5 Inch Caliper Carrier (Right-Left)

CHEEFT NUMBER	1243
OEM NUMBER	K001927 - MB 000 421 3006 - SCN 2121599

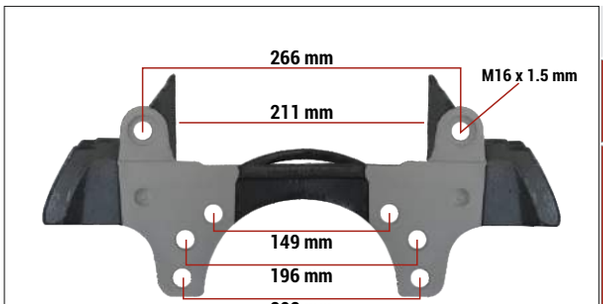

Caliper Carrier Schmitz Trailer KNR Type

CHEEFT NUMBER	1244
OEM NUMBER	K007475 - Z000968

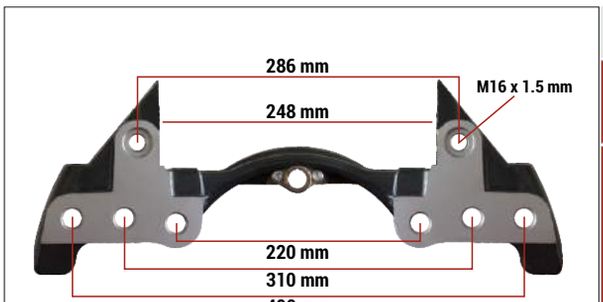

Caliper Carrier For B.V Axle

CHEEFT NUMBER	1245
OEM NUMBER	K001505

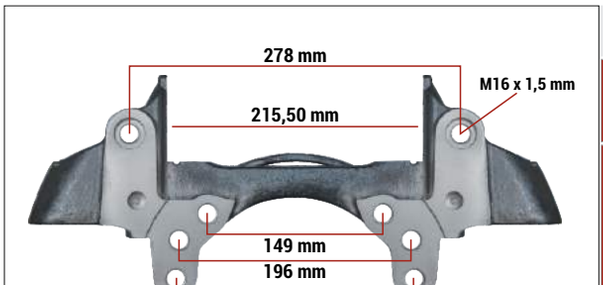

Caliper Carrier For Schmitz Trailer

CHEEFT NUMBER	1248
OEM NUMBER	K108001K50

ORIGINAL PART NUMBERS,MARKS AND MODELS MENTIONED ARE ONLY FOR DESCRIPTION PURPOSES.

CARRIERS

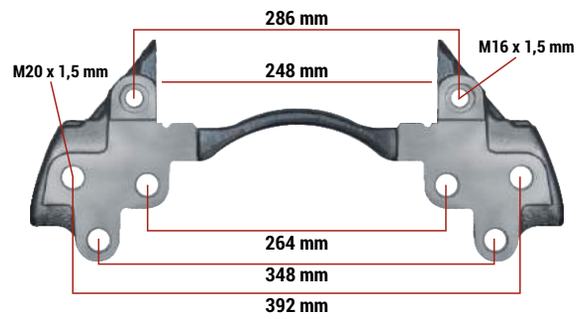

Caliper Carrier For Iveco Truck

CHEEFT NUMBER	1251
OEM NUMBER	K108814K50 - K001510

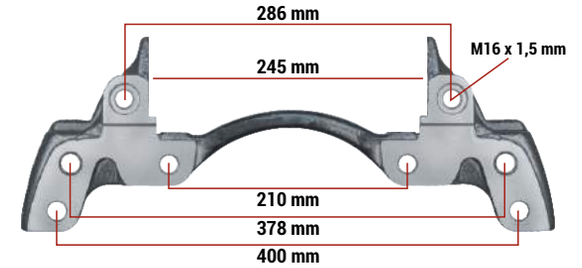

Caliper Carrier MB 4140 - Front (New Model)

CHEEFT NUMBER	1254
OEM NUMBER	K046498K50 - MB 000 421 5706

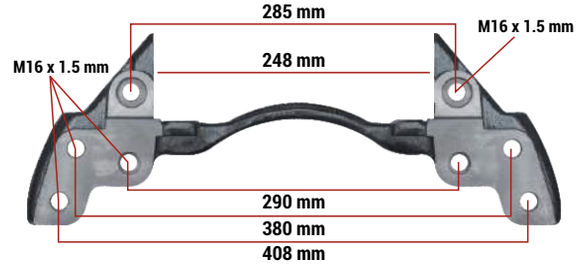

Knr DF 19,5 Inch Caliper Carrier

CHEEFT NUMBER	1255
OEM NUMBER	

ORIGINAL PART NUMBERS,MARKS AND MODELS MENTIONED ARE ONLY FOR DESCRIPTION PURPOSES.

COHEEFT®
AIR DISC BRAKE CALIPER REPAIR KITS

KNR

CABLES

Always the Best...

EAC CE UDEM JAS-ANZ ISO 9001 2015

COHEEFT®
AIR DISC BRAKE CALIPER REPAIR KITS

KNR

CABLES

Always the Best...

EAC CE UDEM JAS-ANZ ISO 9001 2015

CABLES

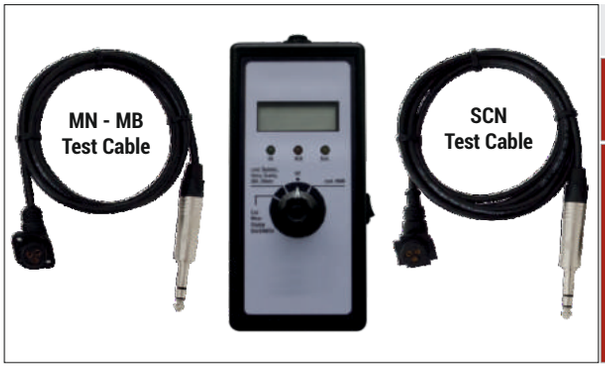

KNR Sensor Testing Device

CHEEFT NUMBER	1453
OEM NUMBER	

Sensor Cable With Connector Socket (3,5 m)

CHEEFT NUMBER	1402
OEM NUMBER	449 756 0350

Sensor Cable With Connector Socket (8,0 m)

CHEEFT NUMBER	1404
OEM NUMBER	

Sensor Cable With Connector Socket (12,0 m)

CHEEFT NUMBER	1406
OEM NUMBER	

Sensor Cable With Connector Socket (1,0 m)

CHEEFT NUMBER	1407
OEM NUMBER	

ORIGINAL PART NUMBERS,MARKS AND MODELS MENTIONED ARE ONLY FOR DESCRIPTION PURPOSES.

CABLES

Sensor Cable With Connector Socket (2,0 Mt)	
CHEEFT NUMBER	1401
OEM NUMBER	449 756 0200

Sensor Cable with Connector Socket (2,0 Mt)	
CHEEFT NUMBER	1412
OEM NUMBER	

Sensor Cable with Connector Socket (5,0 Mt)	
CHEEFT NUMBER	1403
OEM NUMBER	

Sensor Cable with Connector Socket (1,5 Mt)	
CHEEFT NUMBER	1415
OEM NUMBER	1884529

ORIGINAL PART NUMBERS,MARKS AND MODELS MENTIONED ARE ONLY FOR DESCRIPTION PURPOSES.

COHEEFT®
AIR DISC BRAKE CALIPER REPAIR KITS

KNR

SETS

Always the Best...

EAC CE UDEM JAS-ANZ ISO 9001 2015

COHEEFT®
AIR DISC BRAKE CALIPER REPAIR KITS

KNR

SETS

Always the Best...

EAC CE UDEM JAS-ANZ ISO 9001 2015

SETS

12-160 MN SET

CHEEFT NUMBER	CHS1001

NR	CHEEFT NR	DESCRIPTIONS	QTY
1	1002	CALIPER GUIDES & SEALS REPAIR KIT	1
2	1541	STEEL CAP	1
3	1553	O-RING	1
4	1008	CALIPER CALIBRATION BOLT	1
5	1012	CALIPER ADJUSTING SHAFT	1
6	1064	CALIPER ADJUSTING MECHANISM	1
7	1014	CALIPER BRIDGE ASSEMBLY	1
8	1533	TAPPET & BOOT ASSEMBLY (Ø74 mm)	1
9	1520	TAPPET BUSH (Ø18 x Ø16 x 10 mm)	1
10	1537	INNER SEAL	1

NR	CHEEFT NR	DESCRIPTIONS	QTY
11	1168	CALIPER ROLLER BEARINGS	1
12	1169	CALIPER CHAIN (12 LINKS)	1
13	1180	CALIPER LEVER	1

MN TGA SET (NEW MODEL)

CHEEFT NUMBER	CHS1003

NR	CHEEFT NR	DESCRIPTIONS	QTY
1	1040	CALIPER GUIDES & SEALS REPAIR KIT	1
2	1032	CALIPER BRIDGE ASSEMBLY	1
3	1016	PISTON & SEALS REPAIR KIT (Ø74 mm)	1
4	1029	CALIPER ADJUSTING MECHANISM	1
5	1030	CALIPER ADJUSTING SHAFT (WITH SPRING)	1
6	1031	CALIPER CHAIN (29 LINKS)	1
7	1168	CALIPER ROLLER BEARINGS	1
8	1008	CALIPER CALIBRATION BOLT	2

ORIGINAL PART NUMBERS,MARKS AND MODELS MENTIONED ARE ONLY FOR DESCRIPTION PURPOSES.

SETS

AXR SET (OLD MODEL)

CHEEFT NUMBER: CHS1005

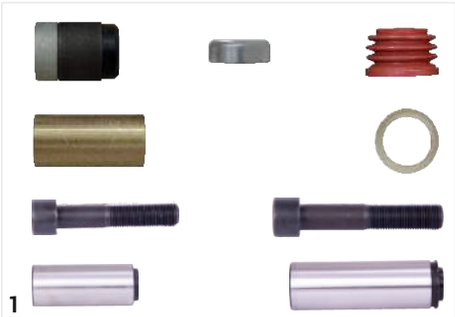

NR	CHEEFT NR	DESCRIPTIONS	QTY
1	1040	CALIPER GUIDES & SEALS REPAIR KIT	1
2	1029	CALIPER ADJUSTING MECHANISM	1
3	1030	CALIPER ADJUSTING SHAFT (WITH SPRING)	1
4	1032	CALIPER BRIDGE ASSEMBLY	1
5	1031	CALIPER CHAIN (29 LINKS)	1
6	1005	CALIPER ROLLER BEARINGS	1
7	1008	CALIPER CALIBRATION BOLT	2
8	1016	PISTON & SEALS REPAIR KIT (Ø74 mm)	1

12-180 MN TGL SET

CHEEFT NUMBER: CHS1002

NR	CHEEFT NR	DESCRIPTIONS	QTY
1	1173	CALIPER GUIDES & SEALS REPAIR KIT	1
2	1007	CALIPER CHAIN (14 LINKS)	1
3	1008	CALIPER CALIBRATION BOLT	1
4	1013	CALIPER ADJUSTING MECHANISM	1
5	1001	PISTON TAPPET REPAIR KIT (Ø69 mm)	1
6	1174	CALIPER ROLLER BEARINGS	1
7	1175	CALIPER AJUSTING SHAFT	1
8	1560	ADJUSTER SCREW GAITER	1
9	1047	CALIPER COVER	1
10	1177	CALIPER BRIDGE ASSEMBLY	1

ORIGINAL PART NUMBERS,MARKS AND MODELS MENTIONED ARE ONLY FOR DESCRIPTION PURPOSES.

SETS

SCN SET

CHEEFT NUMBER	CHS1004

NR	CHEEFT NR	DESCRIPTIONS	QTY
1	1164	CALIPER GUIDES & SEALS REPAIR KIT	1
2	1042	CALIPER BRIDGE ASSEMBLY	1
3	1127	PISTONS & SEALS REPAIR KIT (Ø69 mm)	1
4	1029	CALIPER ADJUSTING MECHANISM	1
5	1030	CALIPER ADJUSTING SHAFT (WITH SPRING)	1
6	1031	CALIPER CHAIN (29 LINKS)	1
7	1168	CALIPER ROLLER BEARINGS	1
8	1008	CALIPER CALIBRATION BOLT	2
9	1045	CALIPER COVER	1

ACTRS B.V SET (NEW MODEL)

CHEEFT NUMBER	CHS1006

NR	CHEEFT NR	DESCRIPTIONS	QTY
1	1039	CALIPER GUIDES & SEALS REPAIR KIT	1
2	1041	CALIPER BRIDGE ASSEMBLY	1
3	1127	PISTONS & SEALS REPAIR KIT (Ø69 mm)	1
4	1030	CALIPER ADJUSTING SHAFT (WITH SPRING)	1
5	1029	CALIPER ADJUSTING MECHANISM	1
6	1031	CALIPER CHAIN (29 LINKS)	1
7	1005	CALIPER ROLLER BEARINGS	1
8	1008	CALIPER CALIBRATION BOLT	2
9	1045	CALIPER COVER	1

ORIGINAL PART NUMBERS,MARKS AND MODELS MENTIONED ARE ONLY FOR DESCRIPTION PURPOSES.

SETS

ACTRS B.V SET (OLD MODEL)

CHEEFT NUMBER: CHS1007

NR	CHEEFT NR	DESCRIPTIONS	QTY
1	1003	CALIPER GUIDES & SEALS REPAIR KIT	1
2	1042	CALIPER BRIDGE ASSEMBLY	1
3	1127	PISTONS & SEALS REPAIR KIT (Ø69 mm)	1
4	1029	CALIPER ADJUSTING MECHANISM	1
5	1030	CALIPER ADJUSTING SHAFT (WITH SPRING)	1
6	1031	CALIPER CHAIN (29 LINKS)	1
7	1168	CALIPER ROLLER BEARINGS	1
8	1008	CALIPER CALIBRATION BOLT	2
9	1045	CALIPER COVER	1

AXR SET (NEW MODEL)

CHEEFT NUMBER: CHS1008

NR	CHEEFT NR	DESCRIPTIONS	QTY
1	1040	CALIPER GUIDES & SEALS REPAIR KIT	1
2	1029	CALIPER ADJUSTING MECHANISM	1
3	1030	CALIPER ADJUSTING SHAFT (WITH SPRING)	1
4	1041	CALIPER BRIDGE ASSEMBLY	1
5	1031	CALIPER CHAIN (29 LINKS)	1
6	1005	CALIPER ROLLER BEARINGS	1
7	1008	CALIPER CALIBRATION BOLT	2
8	1016	PISTONS & SEALS REPAIR KIT (Ø74 mm)	1

ORIGINAL PART NUMBERS,MARKS AND MODELS MENTIONED ARE ONLY FOR DESCRIPTION PURPOSES.

SETS

ST7 REPAIR SET

CHEEFT NUMBER	CHS1010

NR	CHEEFT NR	DESCRIPTIONS	QTY
1	1008	CALIPER CALIBRATION BOLT	2
2	1029	CALIPER ADJUSTING MECHANISM	1
3	1031	CALIPER CHAIN (29 LINKS)	1
4	1203	CALIPER GUIDES & SEALS REPAIR KIT	1
5	1042	CALIPER BRIDGE ASSEMBLY	1
6	1045	CALIPER COVER	1
7	1052	CALIPER ADJUSTING SHAFT (WITHOUT SPRING)	1
8	1223	PISTONS & SEALS REPAIR KIT (Ø69 mm)	1
9	1168	CALIPER ROLLER BEARINGS	1

AXR SET (NEW MODEL)

CHEEFT NUMBER	CHS1009

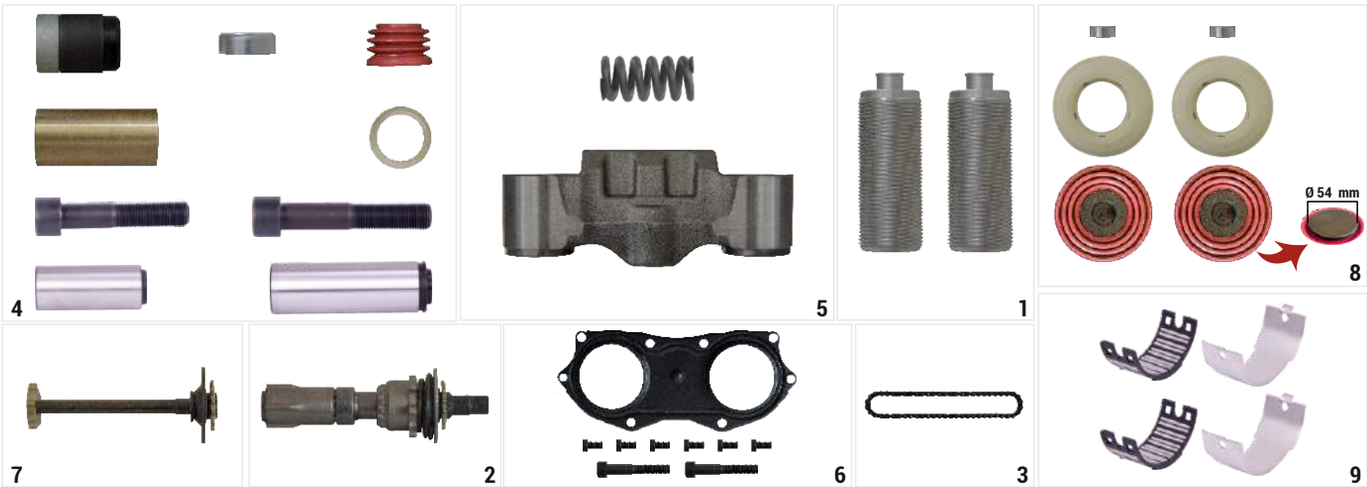

NR	CHEEFT NR	DESCRIPTIONS	QTY
1	1009	CALIPER CALIRATION BOLT	2
2	1029	CALIPER ADJUSTING MECHANISM	1
3	1031	CALIPER CHAIN (29 LINKS)	1
4	1040	CALIPER GUIDES & SEALS REPAIR KIT	1
5	1042	CALIPER BRIDGE ASSEMBLY	1
6	1046	CALIPER COVER	1
7	1052	CALIPER ADJUSTING SHAFT (WITHOUT SPRING)	1
8	1056	PISTON & SEAL REPAIR KIT (Ø69 mm)	1
9	1069	CALIPER BEARINGS	1

ORIGINAL PART NUMBERS,MARKS AND MODELS MENTIONED ARE ONLY FOR DESCRIPTION PURPOSES.

COHEEFT®

AIR DISC BRAKE CALIPER REPAIR KITS

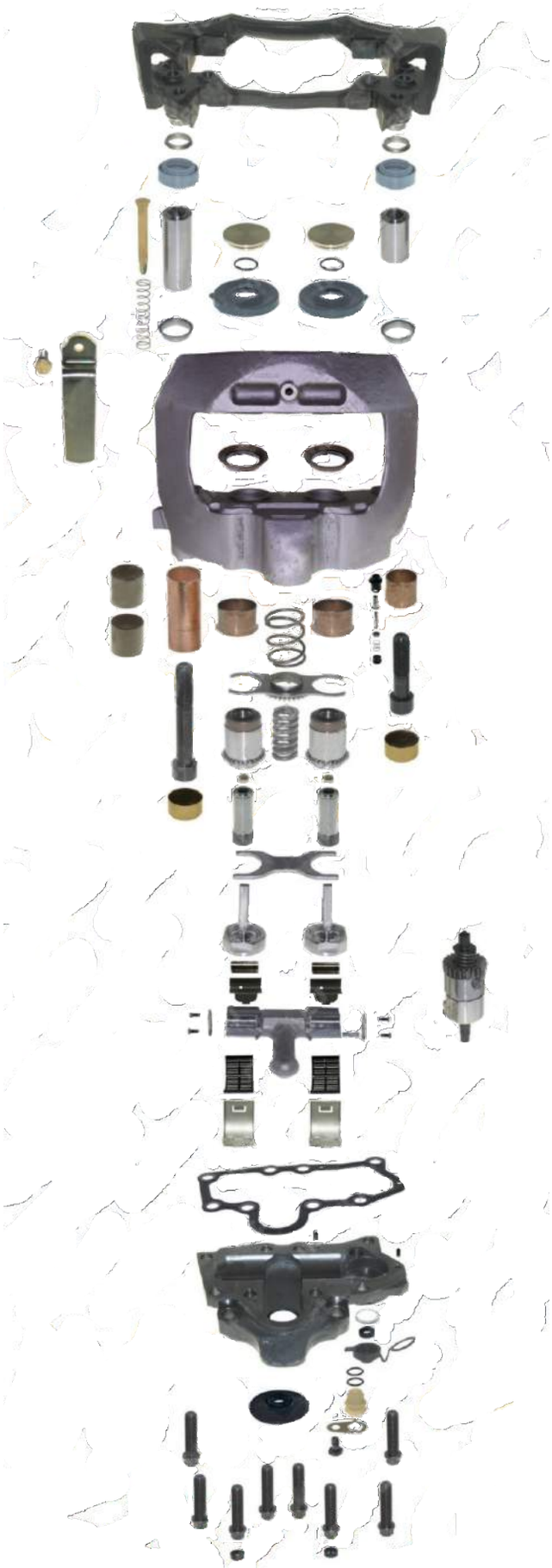

MRT

B DUCO TYPE

Always the Best...

EAC CE UDEM JAS-ANZ ISO 9001 2015

B DUCO TYPE

CHEEFT NUMBER	2109

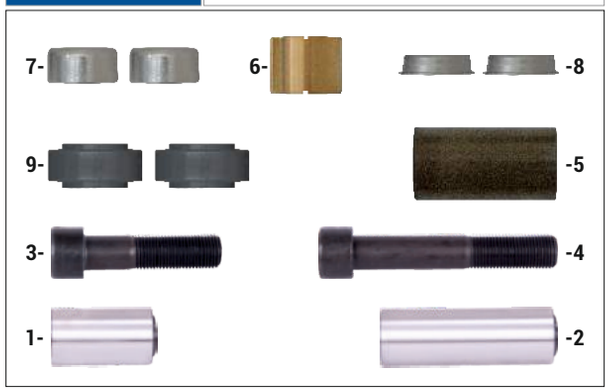

Caliper Guides & Seals Repair Kit

OEM NUMBER	MN STRMCK1116 - DF 1489197 MRT MCK1116 - VLV 85102094 AMMCK1116 - RVI 5021 202 776

NR	CHEEFT NR	DESCRIPTIONS	DIMENSION	QTY
1	2504	GUIDE PIN	Ø35 x 60 mm	1
2	2507	GUIDE PIN	Ø35 x 102 mm	1
3	2557	BOLT	M20 x 2 x 83 mm	1
4	2559	BOLT	M20 x 2 x 124 mm	1
5	2530	FIBER BUSH	Ø39,5 x Ø35 x 76,70 mm	1
6	2525	BRONZE OVAL BUSH	Ø39 x Ø36,2/35,3 x 30 mm	1
7	2542	STEEL CAP	Ø40 x 20 mm	2
8	2571	DUST EXCLUDER RETAINER	Ø40 x 11,5 mm	2
9	2582	DUST EXCLUDER		2

CHEEFT NUMBER	2285

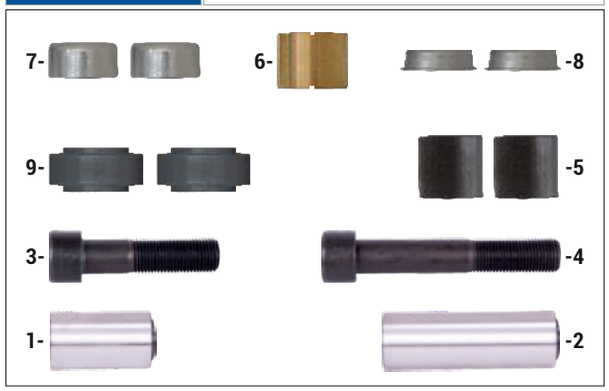

Caliper Guides & Seals Repair Kit

OEM NUMBER	MCK1134-SJ4094 - DF 1489198 VLV 3092255-3095627-85103892 AMMCK1134

NR	CHEEFT NR	DESCRIPTIONS	DIMENSION	QTY
1	2504	GUIDE PIN	Ø35 x 60 mm	1
2	2507	GUIDE PIN	Ø35 x 102 mm	1
3	2557	BOLT	M20 x 2 x 83 mm	1
4	2559	BOLT	M20 x 2 x 124 mm	1
5	2773	FIBER BUSH	Ø39 x Ø35 x 38 mm	2
6	2525	BRONZE OVAL BUSH	Ø39 x Ø36,2/35,3 x 30 mm	1
7	2542	STEEL CAP	Ø40 x 20 mm	2
8	2571	DUST EXCLUDER RETAINER	Ø40 x 11,5 mm	2
9	2582	DUST EXCLUDER		2

CHEEFT NUMBER	2110

Caliper Guides & Seals Repair Kit

OEM NUMBER	MCK1065 - MCK1066

NR	CHEEFT NR	DESCRIPTIONS	DIMENSION	QTY
1	2507	GUIDE PIN	Ø35 x 102 mm	1
2	2542	STEEL CAP	Ø40 x 20 mm	2
3	2582	DUST EXCLUDER		2

ORIGINAL PART NUMBERS,MARKS AND MODELS MENTIONED ARE ONLY FOR DESCRIPTION PURPOSES.

B DUCO TYPE

CHEEFT NUMBER	2264

Caliper Guides & Seals Repair Kit

OEM NUMBER	MN STRMCK1299 - MRT MCK1299 VLV 3092268 - 3095628 - 3096769 - 85107718 AMMCK1299 - PCCR Y07100312 - DF 1522170

NR	CHEEFT NR	DESCRIPTIONS	DIMENSION	QTY
1	2582	DUST EXCLUDER		2
2	2542	STEEL CAP	Ø40 x 20 mm	2
3	2559	BOLT	M20 x 2 x 124 mm	2
4	2557	BOLT	M20 x 2 x 83 mm	1
5	2507	GUIDE PIN	Ø35 x 102 mm	1

CHEEFT NUMBER	2112

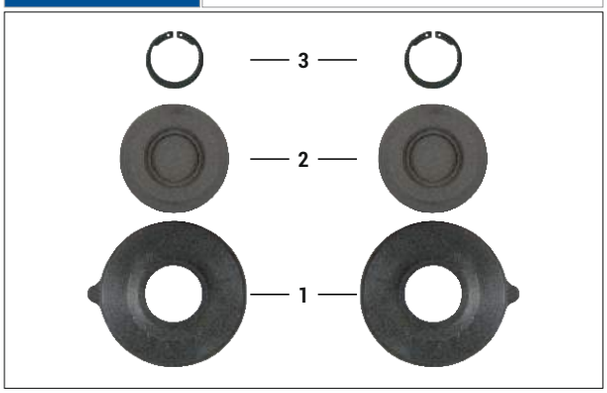

Caliper Piston Tappet & Boot Repair Kit

OEM NUMBER	MN STRMCK1238 - DF 868378 - MCK1238 VLV 3092264 - AMMCK1238 RNLT 5021 202 828

NR	CHEEFT NR	DESCRIPTIONS	DIMENSION	QTY
1	2584	TAPPET DUST EXCLUDER		2
2	2611	TAPPET HEAD		2
3	2613	TAPPET HEAD CIRCLIP		2

CHEEFT NUMBER	2114

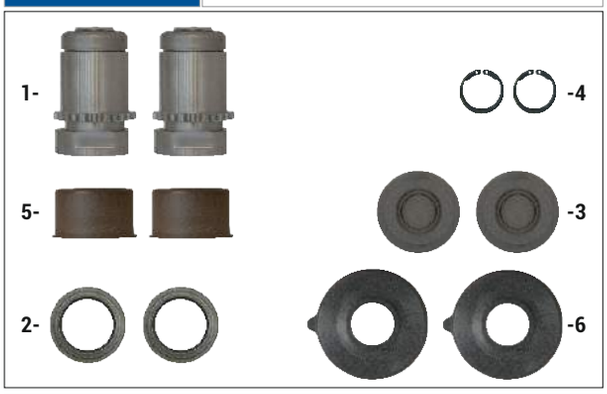

Caliper Adjuster Tappet Repair Kit (Right)

OEM NUMBER	MCK1237 - MCK1239 VLV 3092263 - 3095642

NR	CHEEFT NR	DESCRIPTIONS	DIMENSION	QTY
1	2609	MECHANISM (RIGHT)		2
2	2579	DUST EXCLUDER RETAINER	Ø63,5 x 11,5 mm	2
3	2611	TAPPET HEAD		2
4	2613	TAPPET HEAD CIRCLIP		2
5	2532	FIBER BUSH	Ø49 x Ø45 x 30 mm	2
6	2584	TAPPET DUST EXCLUDER		2

ORIGINAL PART NUMBERS,MARKS AND MODELS MENTIONED ARE ONLY FOR DESCRIPTION PURPOSES.

B DUCO TYPE

CHEEFT NUMBER	2111

Caliper Tappet Dust Covers

OEM NUMBER	MN 35.40311.2182 - 81.50802.6024 - DF 1487339 MRT MCK1139 - MCK1288 - 68324854PK10 VLV 85107913 - ZF 0501215022 RVI 5006 028 414 - 5021 179 952

NR	CHEEFT NR	DESCRIPTIONS	DIMENSION	QTY
1	2584	TAPPET DUST COVER		2

CHEEFT NUMBER	2209

Caliper Adjuster Seal & Boot Repair Kit

OEM NUMBER	

NR	CHEEFT NR	DESCRIPTIONS	DIMENSION	QTY
1	2192	ADJUSTER DUST BOOT		1
2	2704	DUST COVER RETAINER	Ø30 x 4 mm	1
3	2627	ADJUSTER SEAL		1

CHEEFT NUMBER	2226

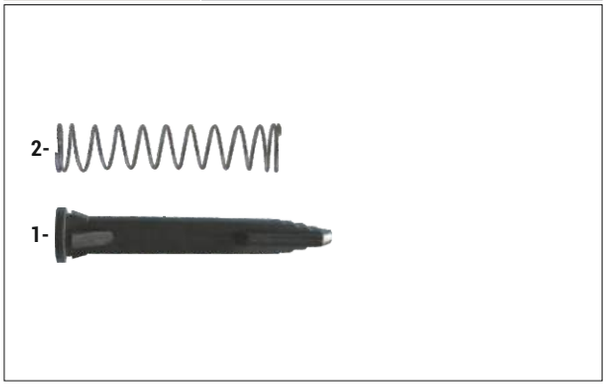

Caliper Visual Indicator

OEM NUMBER	SJ4111 - VLV 3092283

NR	CHEEFT NR	DESCRIPTIONS	DIMENSION	QTY
1	2722	VISUAL INDICATOR		1
2	2670	SPRING OF VISUAL INDICATOR	Ø16 x 80 mm	1

ORIGINAL PART NUMBERS,MARKS AND MODELS MENTIONED ARE ONLY FOR DESCRIPTION PURPOSES.

B DUCO TYPE

CHEEFT NUMBER	2255

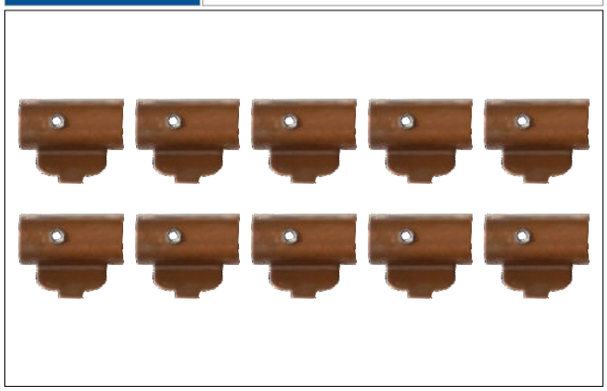

Caliper Lever Bushes Kit

OEM NUMBER	

NR	CHEEFT NR	DESCRIPTIONS	DIMENSION	QTY
1	2633	LEVER BUSH		10

CHEEFT NUMBER	2070

Caliper Bearing Repair Kit (Axial)

OEM NUMBER	DF 1522169 - SJ4112 - VLV 3092329

NR	CHEEFT NR	DESCRIPTIONS	DIMENSION	QTY
1	2071	ROLLER BEARINGS		1
2	2633	LEVER BUSH		2
3	2634	ROLLER		2

CHEEFT NUMBER	2153

Caliper Lever Repair Kit

OEM NUMBER	MCK1048

NR	CHEEFT NR	DESCRIPTIONS	DIMENSION	QTY
1	2772	CALIPER LEVER		1
2	2070	CALIPER BEARING REPAIR KIT		1
3	2628	ACTUATOR SEAL		1

ORIGINAL PART NUMBERS,MARKS AND MODELS MENTIONED ARE ONLY FOR DESCRIPTION PURPOSES.

B DUCO TYPE

Caliper Roller Bearings

CHEEFT NUMBER	2071
OEM NUMBER	

Caliper Gear Mechanism (Right)

CHEEFT NUMBER	2249
OEM NUMBER	68322563 - VLV 3092280

Caliper Gear Mechanism (Left)

CHEEFT NUMBER	2250
OEM NUMBER	68322562 - VLV 3092281

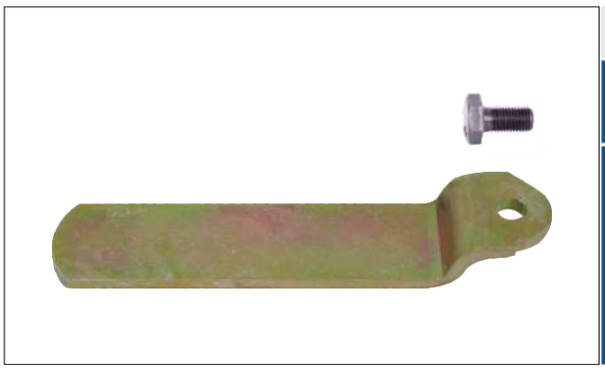

Caliper Pad Retainer Repair Kit

CHEEFT NUMBER	2253
OEM NUMBER	MCK1264 - VLV 3092276 - 3092277

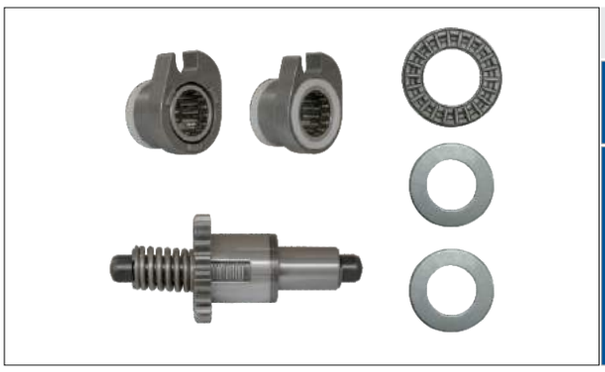

Caliper Adjuster Mechanism

CHEEFT NUMBER	2154
OEM NUMBER	MCK1050 - VLV 3095646

ORIGINAL PART NUMBERS,MARKS AND MODELS MENTIONED ARE ONLY FOR DESCRIPTION PURPOSES.

B DUCO TYPE

CHEEFT NUMBER	2310

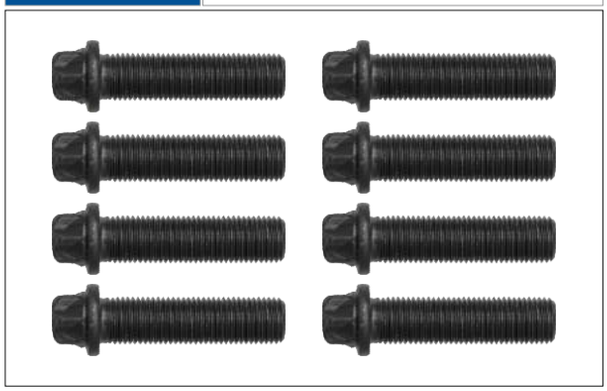

Cover Bolt Kit

OEM NUMBER	

NR	CHEEFT NR	DESCRIPTIONS	DIMENSION	QTY
1	2814	COVER BOLT	M14 x 1,5 x 55 mm	8

CHEEFT NUMBER	2221

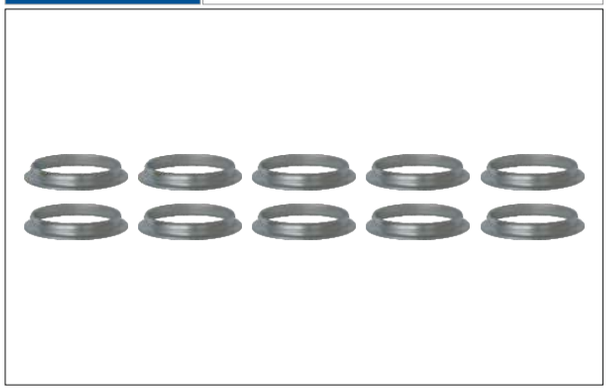

Caliper Dust Excluder Retainer Kit

OEM NUMBER	

NR	CHEEFT NR	DESCRIPTIONS	DIMENSION	QTY
1	2703	DUST EXCLUDER RETAINER	Ø37,5 x 5,5 mm	10

Caliper Adjuster Dust Boot

CHEEFT NUMBER	2163
OEM NUMBER	

ORIGINAL PART NUMBERS,MARKS AND MODELS MENTIONED ARE ONLY FOR DESCRIPTION PURPOSES.

B DUCO TYPE

B DUCO SET (RIGHT-LEFT)	CHEEFT NUMBER	CHS2031

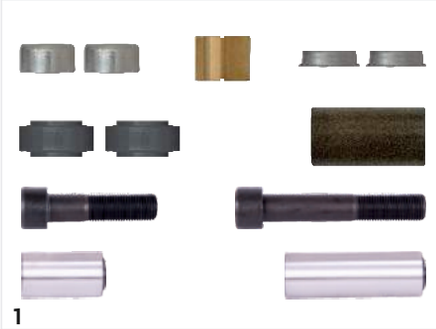
1

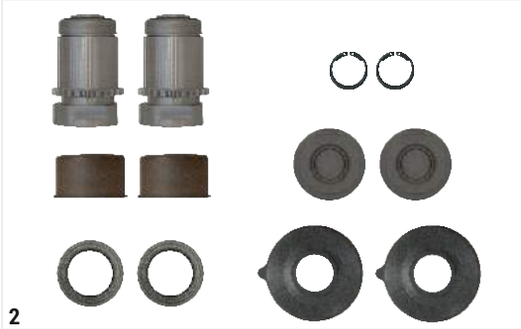
2

4

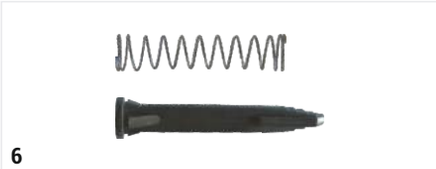
6

3

5

NR	CHEEFT NR	DESCRIPTIONS	QTY
1	2109	GUIDES & SEALS REPAIR KIT	1
2	2114	ADJUSTER TAPPET REPAIR KIT	1
3	2154	ADJUSTER MECHANISM	1
4	2153	LEVER REPAIR KIT	1
5	2163	ADJUSTER DUST BOOT	1
6	2226	VISUAL INDICATOR	1

ORIGINAL PART NUMBERS,MARKS AND MODELS MENTIONED ARE ONLY FOR DESCRIPTION PURPOSES.

COHEEFT®

AIR DISC BRAKE CALIPER REPAIR KITS

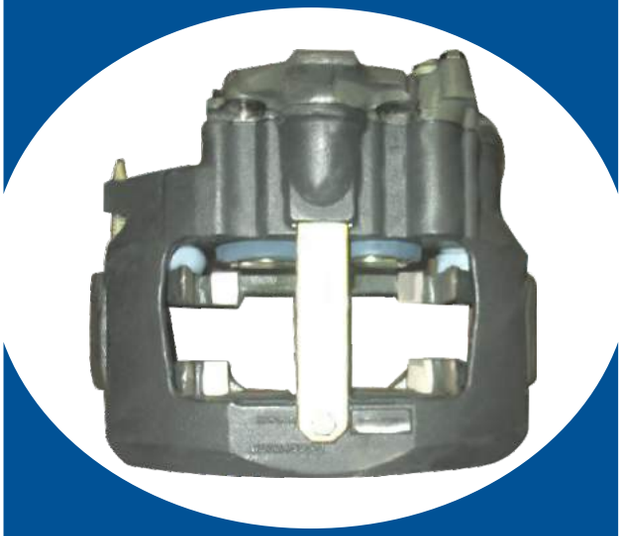

MRT

C/LE DUCO TYPE

Always the Best...

EAC CE UDEM JAS-ANZ ISO 9001 2015

C/LE DUCO TYPE

CHEEFT NUMBER	2109

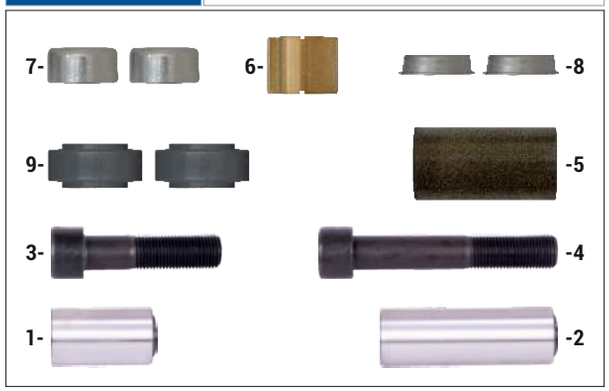

Caliper Guides & Seals Repair Kit

OEM NUMBER	MN STRMCK1116 - DF 1489197 MRT MCK1116 - VLV 85102094 AMMCK1116 - RVI 5021 202 776

NR	CHEEFT NR	DESCRIPTIONS	DIMENSION	QTY
1	2504	GUIDE PIN	Ø35 x 60 mm	1
2	2507	GUIDE PIN	Ø35 x 102 mm	1
3	2557	BOLT	M20 x 2 x 83 mm	1
4	2559	BOLT	M20 x 2 x 124 mm	1
5	2530	FIBER BUSH	Ø39,5 x Ø35 x 76,70 mm	1
6	2525	BRONZE OVAL BUSH	Ø39 x Ø36,2/35,3 x 30 mm	1
7	2542	STEEL CAP	Ø40 x 20 mm	2
8	2571	DUST EXCLUDER RETAINER	Ø40 x 11,5 mm	2
9	2582	DUST EXCLUDER		2

CHEEFT NUMBER	2285

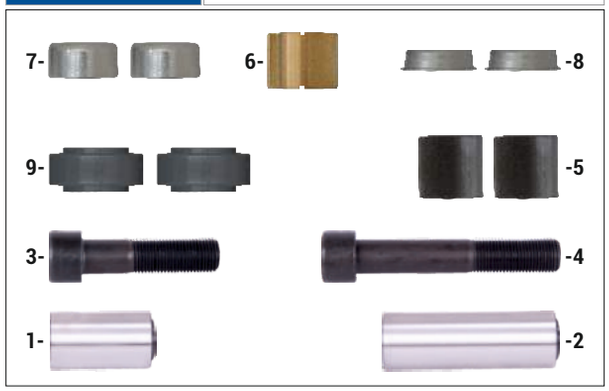

Caliper Guides & Seals Repair Kit

OEM NUMBER	MCK1134-SJ4094 - DF 1489198 VLV 3092255-3095627-85103892 AMMCK1134

NR	CHEEFT NR	DESCRIPTIONS	DIMENSION	QTY
1	2504	GUIDE PIN	Ø35 x 60 mm	1
2	2507	GUIDE PIN	Ø35 x 102 mm	1
3	2557	BOLT	M20 x 2 x 83 mm	1
4	2559	BOLT	M20 x 2 x 124 mm	1
5	2773	FIBER BUSH	Ø39 x Ø35 x 38 mm	2
6	2525	BRONZE OVAL BUSH	Ø39 x Ø36,2/35,3 x 30 mm	1
7	2542	STEEL CAP	Ø40 x 20 mm	2
8	2571	DUST EXCLUDER RETAINER	Ø40 x 11,5 mm	2
9	2582	DUST EXCLUDER		2

CHEEFT NUMBER	2110

Caliper Guides & Seals Repair Kit

OEM NUMBER	MCK1065 - MCK1066

NR	CHEEFT NR	DESCRIPTIONS	DIMENSION	QTY
1	2507	GUIDE PIN	Ø35 x 102 mm	1
2	2542	STEEL CAP	Ø40 x 20 mm	2
3	2582	DUST EXCLUDER		2

ORIGINAL PART NUMBERS,MARKS AND MODELS MENTIONED ARE ONLY FOR DESCRIPTION PURPOSES.

C/LE DUCO TYPE

CHEEFT NUMBER	2264

Caliper Guides & Seals Repair Kit

OEM NUMBER	MN STRMCK1299 - MRT MCK1299 VLV 3092268 - 3095628 - 3096769 - 85107718 AMMCK1299 - PCCR Y07100312 - DF 1522170

NR	CHEEFT NR	DESCRIPTIONS	DIMENSION	QTY
1	2582	DUST EXCLUDER		2
2	2542	STEEL CAP	Ø40 x 20 mm	2
3	2559	BOLT	M20 x 2 x 124 mm	2
4	2557	BOLT	M20 x 2 x 83 mm	1
5	2507	GUIDE PIN	Ø35 x 102 mm	1

CHEEFT NUMBER	2111

Caliper Tappet Dust Covers

OEM NUMBER	MN 35.40311.2182 - 81.50802.6024 - DF 1487339 MRT MCK1139 - MCK1288 - 68324854PK10 VLV 85107913 - ZF 0501215022 RVI 5006 028 414 - 5021 179 952

NR	CHEEFT NR	DESCRIPTIONS	DIMENSION	QTY
1	2584	TAPPET DUST COVER		2

CHEEFT NUMBER	2112

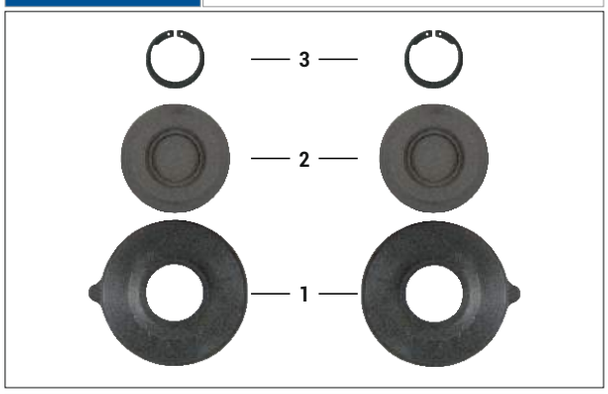

Caliper Piston Tappet & Boot Repair Kit

OEM NUMBER	MN STRMCK1238 - DF 868378 - MCK1238 VLV 3092264 - AMMCK1238 RNLT 5021 202 828

NR	CHEEFT NR	DESCRIPTIONS	DIMENSION	QTY
1	2584	TAPPET DUST EXCLUDER		2
2	2611	TAPPET HEAD		2
3	2613	TAPPET HEAD CIRCLIP		2

ORIGINAL PART NUMBERS,MARKS AND MODELS MENTIONED ARE ONLY FOR DESCRIPTION PURPOSES.

C/LE DUCO TYPE

CHEEFT NUMBER	2113

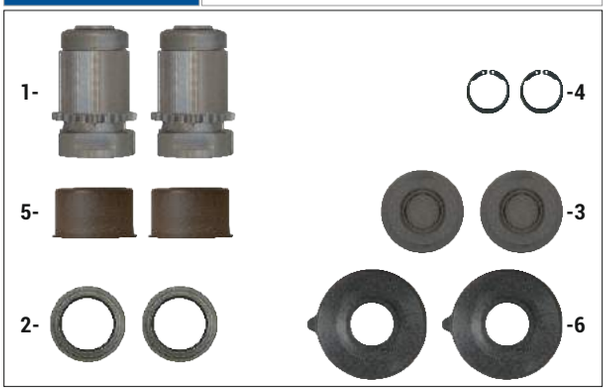

Caliper Adjuster Tappet Repair Kit (Left)

OEM NUMBER	MCK1236 - VLV 3092262

NR	CHEEFT NR	DESCRIPTIONS	DIMENSION	QTY
1	2608	MECHANISM (LEFT)		2
2	2579	DUST EXCLUDER RETAINER	Ø63,5 x 11,5 mm	2
3	2611	TAPPET HEAD		2
4	2613	TAPPET HEAD CIRCLIP		2
5	2532	FIBER BUSH	Ø49 x Ø45 x 30 mm	2
6	2584	TAPPET DUST EXCLUDER		2

CHEEFT NUMBER	2114

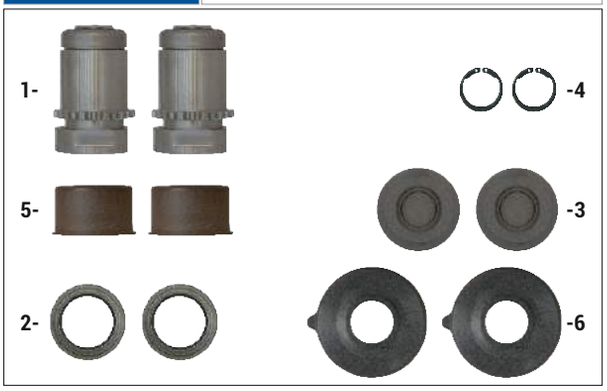

Caliper Adjuster Tappet Repair Kit (Right)

OEM NUMBER	MCK1237 - MCK1239 VLV 3092263 - 3095642

NR	CHEEFT NR	DESCRIPTIONS	DIMENSION	QTY
1	2609	MECHANISM (RIGHT)		2
2	2579	DUST EXCLUDER RETAINER	Ø63,5 x 11,5 mm	2
3	2611	TAPPET HEAD		2
4	2613	TAPPET HEAD CIRCLIP		2
5	2532	FIBER BUSH	Ø49 x Ø45 x 30 mm	2
6	2584	TAPPET DUST EXCLUDER		2

CHEEFT NUMBER	2255

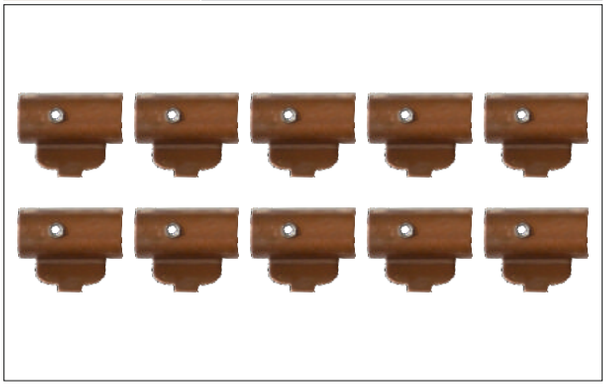

Caliper Lever Bushes Kit

OEM NUMBER	

NR	CHEEFT NR	DESCRIPTIONS	DIMENSION	QTY
1	2633	LEVER BUSH		10

ORIGINAL PART NUMBERS,MARKS AND MODELS MENTIONED ARE ONLY FOR DESCRIPTION PURPOSES.

C/LE DUCO TYPE

CHEEFT NUMBER	2070

Caliper Bearing Repair Kit (Axial)

OEM NUMBER	DF 1522169 - SJ4112 - VLV 3092329

NR	CHEEFT NR	DESCRIPTIONS	DIMENSION	QTY
1	2071	ROLLER BEARINGS		1
2	2633	LEVER BUSH		2
3	2634	ROLLER		2

CHEEFT NUMBER	2259

Caliper Lever Repair Kit (Left)

OEM NUMBER	MCK1127 - VLV 85102097 - 85109978

NR	CHEEFT NR	DESCRIPTIONS	DIMENSION	QTY
1	2735	LEVER (LEFT)		1
2	2070	CALIPER BEARING REPAIR KIT		1
3	2628	ACTUATOR SEAL		1

CHEEFT NUMBER	2260

Caliper Lever Repair Kit (Right)

OEM NUMBER	MCK1128 - VLV 85102098 - 85109979

NR	CHEEFT NR	DESCRIPTIONS	DIMENSION	QTY
1	2736	LEVER (RIGHT)		1
2	2070	CALIPER BEARING REPAIR KIT		1
3	2628	ACTUATOR SEAL		1

ORIGINAL PART NUMBERS,MARKS AND MODELS MENTIONED ARE ONLY FOR DESCRIPTION PURPOSES.

C/LE DUCO TYPE

CHEEFT NUMBER	2209

Caliper Adjuster Seal & Boot Repair Kit

OEM NUMBER	

NR	CHEEFT NR	DESCRIPTIONS	DIMENSION	QTY
1	2192	ADJUSTER DUST BOOT		1
2	2704	DUST COVER RETAINER	Ø30 x 4 mm	1
3	2627	ADJUSTER SEAL		1

CHEEFT NUMBER	2126

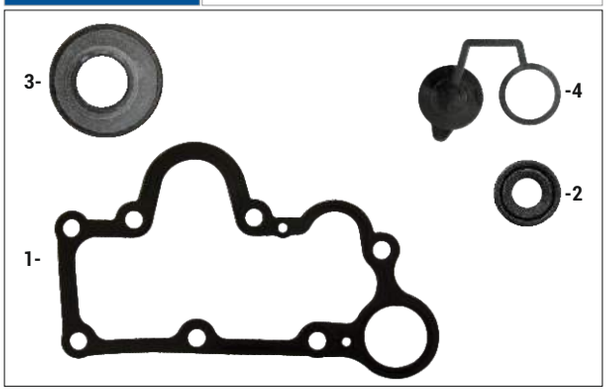

Caliper Cover Seal Repair Kit

OEM NUMBER	MCK1041 - VLV 3095669

NR	CHEEFT NR	DESCRIPTIONS	DIMENSION	QTY
1	2626	COVER GASKET		1
2	2627	ADJUSTER SEAL		1
3	2628	ACTUATOR SEAL		1
4	2163	ADJUSTER DUST BOOT		1

CHEEFT NUMBER	2226

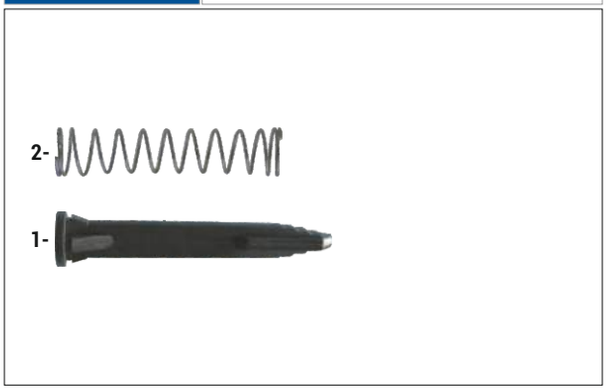

Caliper Visual Indicator

OEM NUMBER	SJ4111 - VLV 3092283

NR	CHEEFT NR	DESCRIPTIONS	DIMENSION	QTY
1	2722	VISUAL INDICATOR		1
2	2670	SPRING OF VISUAL INDICATOR	Ø16 x 80 mm	1

ORIGINAL PART NUMBERS,MARKS AND MODELS MENTIONED ARE ONLY FOR DESCRIPTION PURPOSES.

C/LE DUCO TYPE

CHEEFT NUMBER	2221

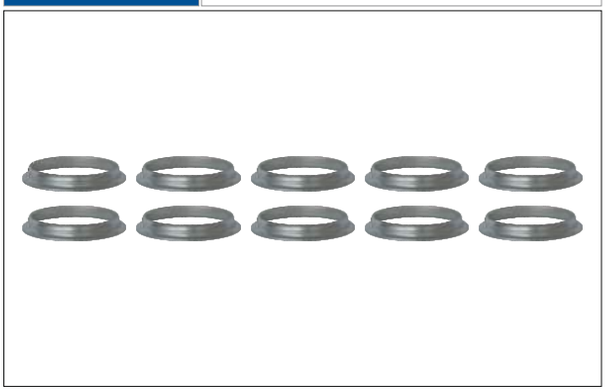

Caliper Dust Excluder Retainer Kit

OEM NUMBER	

NR	CHEEFT NR	DESCRIPTIONS	DIMENSION	QTY
1	2703	DUST EXCLUDER RETAINER	Ø37,5 x 5,5 mm	10

CHEEFT NUMBER	2156

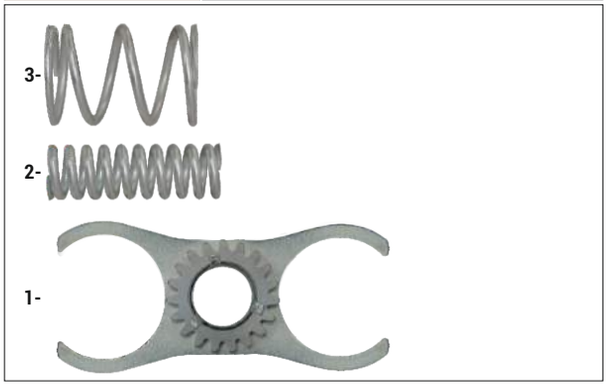

Caliper Gear & Spring Repair Kit

OEM NUMBER	MCK1129 - VLV 85102099

NR	CHEEFT NR	DESCRIPTIONS	DIMENSION	QTY
1	2778	INTERMEDIATE GEAR		1
2	2776	COMPRESSION SPRING		1
3	2777	COMPRESSION SPRING		1

CHEEFT NUMBER	2310

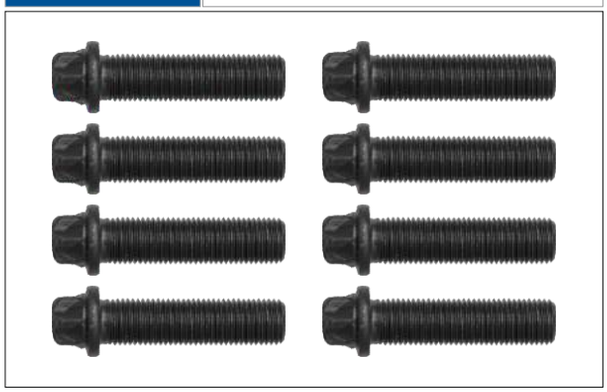

Cover Bolt Kit

OEM NUMBER	

NR	CHEEFT NR	DESCRIPTIONS	DIMENSION	QTY
1	2814	COVER BOLT	M14 x 1,5 x 55 mm	8

ORIGINAL PART NUMBERS,MARKS AND MODELS MENTIONED ARE ONLY FOR DESCRIPTION PURPOSES.

C/LE DUCO TYPE

Caliper Roller Bearings

CHEEFT NUMBER	2071
OEM NUMBER	

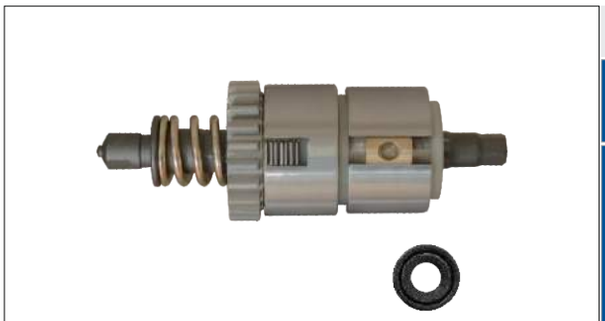

locks clockwise / turns freely anti-clockwise

Caliper Automatic Adjuster (Right)

CHEEFT NUMBER	2118
OEM NUMBER	SJ4103 - MCK1112 VLV 3092266 - 85102096

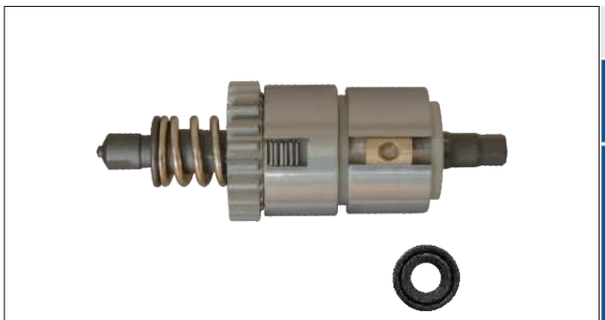

locks anti-clockwise / turns freely clockwise

Caliper Automatic Adjuster (Left)

CHEEFT NUMBER	2119
OEM NUMBER	SJ4102 - MCK1111 VLV 3092265 - 85102095

Caliper Gear Mechanism (Right)

CHEEFT NUMBER	2249
OEM NUMBER	68322563 - VLV 3092280

Caliper Gear Mechanism (Left)

CHEEFT NUMBER	2250
OEM NUMBER	68322562 - VLV 3092281

ORIGINAL PART NUMBERS,MARKS AND MODELS MENTIONED ARE ONLY FOR DESCRIPTION PURPOSES.

C/LE DUCO TYPE

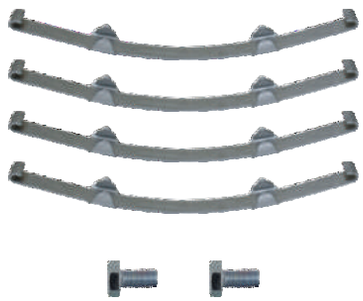

Caliper Pad Spring Kit

CHEEFT NUMBER	2127
OEM NUMBER	MRT MBA103 - VLV 85109445 C DUCO For WVA 29137

Caliper Adjuster Dust Boot

CHEEFT NUMBER	2192
OEM NUMBER	MRT 68322655 - 68322655PK10 MN 81.50810.0005 - PCCR 1489071 VLV 3092282 - AM68322655 RNLT 5006 028 417

Caliper Pad Retainer Repair Kit

CHEEFT NUMBER	2253
OEM NUMBER	MCK1264 - VLV 3092276 - 3092277

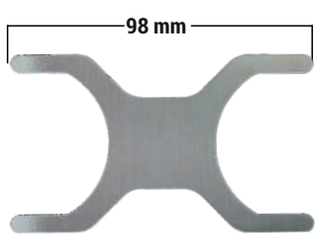

Caliper Tappet Anti Rotation Plate

CHEEFT NUMBER	2155
OEM NUMBER	68322485

DUCO TYPE 19,5 Inch Caliper Carrier (Right-Left)

CHEEFT NUMBER	2315
OEM NUMBER	MRT 68323539

ORIGINAL PART NUMBERS,MARKS AND MODELS MENTIONED ARE ONLY FOR DESCRIPTION PURPOSES.

C/LE DUCO TYPE

C-LE DUCO SET (RIGHT)

CHEEFT NUMBER	CHS2033

NR	CHEEFT NR	DESCRIPTIONS	QTY
1	2109	GUIDES & SEALS REPAIR KIT	1
2	2114	ADJUSTER TAPPET REPAIR KIT (RIGHT)	1
3	2118	AUTOMATIC ADJUSTER (RIGHT)	1
4	2260	LEVER REPAIR KIT (RIGHT)	1
5	2155	TAPPET ANTI ROTATION PLATE	1
6	2156	GEAR & SPRING REPAIR KIT	1
7	2126	COVER PLATE SEAL REPAIR KIT	1
8	2226	VISUAL INDICATOR	1
9	2249	GEAR MECHANISM (RIGHT)	1

C-LE DUCO SET (LEFT)

CHEEFT NUMBER	CHS2032

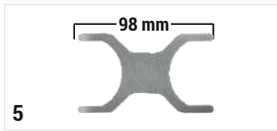

NR	CHEEFT NR	DESCRIPTIONS	QTY
1	2109	GUIDES & SEALS REPAIR KIT	1
2	2113	ADJUSTER TAPPET REPAIR KIT (LEFT)	1
3	2119	AUTOMATIC ADJUSTER (LEFT)	1
4	2259	LEVER REPAIR KIT (LEFT)	1
5	2155	TAPPET ANTI ROTATION PLATE	1
6	2156	GEAR & SPRING REPAIR KIT	1
7	2126	COVER GASKET	1
8	2226	VISUAL INDICATOR	1
9	2250	GEAR MECHANISM (LEFT)	1

ORIGINAL PART NUMBERS,MARKS AND MODELS MENTIONED ARE ONLY FOR DESCRIPTION PURPOSES.

COHEEFT®

AIR DISC BRAKE CALIPER REPAIR KITS

MRT

D DUCO AXIAL TYPE

Always the Best...

EAC CE UDEM JAS-ANZ ISO 9001 2015

D DUCO AXIAL TYPE

CHEEFT NUMBER	2109

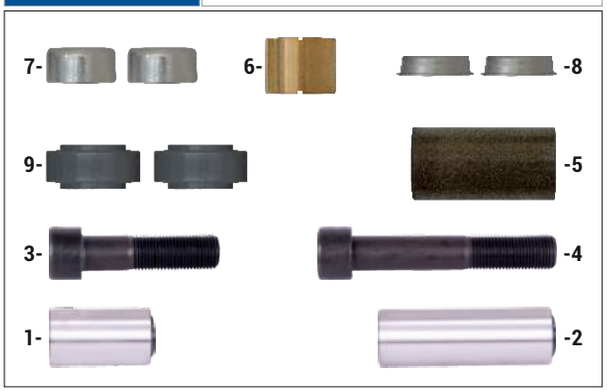

Caliper Guides & Seals Repair Kit

OEM NUMBER	MN STRMCK1116 - DF 1489197 MRT MCK1116 - VLV 85102094 AMMCK1116 - RVI 5021 202 776

NR	CHEEFT NR	DESCRIPTIONS	DIMENSION	QTY
1	2504	GUIDE PIN	Ø35 x 60 mm	1
2	2507	GUIDE PIN	Ø35 x 102 mm	1
3	2557	BOLT	M20 x 2 x 83 mm	1
4	2559	BOLT	M20 x 2 x 124 mm	1
5	2530	FIBER BUSH	Ø39,5 x Ø35 x 76,70 mm	1
6	2525	BRONZE OVAL BUSH	Ø39 x Ø36,2/35,3 x 30 mm	1
7	2542	STEEL CAP	Ø40 x 20 mm	2
8	2571	DUST EXCLUDER RETAINER	Ø40 x 11,5 mm	2
9	2582	DUST EXCLUDER		2

CHEEFT NUMBER	2285

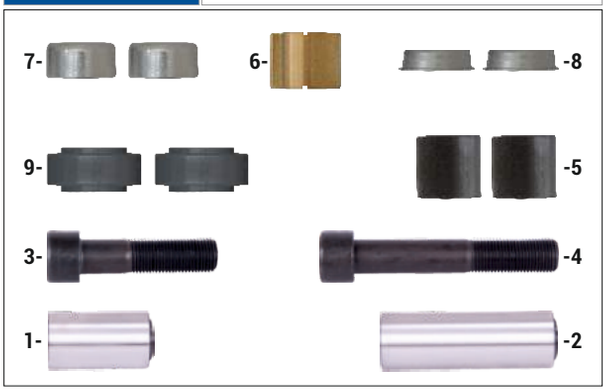

Caliper Guides & Seals Repair Kit

OEM NUMBER	MCK1134-SJ4094 - DF 1489198 VLV 3092255-3095627-85103892 AMMCK1134

NR	CHEEFT NR	DESCRIPTIONS	DIMENSION	QTY
1	2504	GUIDE PIN	Ø35 x 60 mm	1
2	2507	GUIDE PIN	Ø35 x 102 mm	1
3	2557	BOLT	M20 x 2 x 83 mm	1
4	2559	BOLT	M20 x 2 x 124 mm	1
5	2773	FIBER BUSH	Ø39 x Ø35 x 38 mm	2
6	2525	BRONZE OVAL BUSH	Ø39 x Ø36,2/35,3 x 30 mm	1
7	2542	STEEL CAP	Ø40 x 20 mm	2
8	2571	DUST EXCLUDER RETAINER	Ø40 x 11,5 mm	2
9	2582	DUST EXCLUDER		2

CHEEFT NUMBER	2110

Caliper Guides & Seals Repair Kit

OEM NUMBER	MCK1065 - MCK1066

NR	CHEEFT NR	DESCRIPTIONS	DIMENSION	QTY
1	2507	GUIDE PIN	Ø35 x 102 mm	1
2	2542	STEEL CAP	Ø40 x 20 mm	2
3	2582	DUST EXCLUDER		2

ORIGINAL PART NUMBERS,MARKS AND MODELS MENTIONED ARE ONLY FOR DESCRIPTION PURPOSES.

D DUCO AXIAL TYPE

CHEEFT NUMBER	2264

Caliper Guides & Seals Repair Kit

OEM NUMBER	MN STRMCK1299 - MRT MCK1299 VLV 3092268 - 3095628 - 3096769 - 85107718 AMMCK1299 - PCCR Y07100312 - DF 1522170

NR	CHEEFT NR	DESCRIPTIONS	DIMENSION	QTY
1	2582	DUST EXCLUDER		2
2	2542	STEEL CAP	Ø40 x 20 mm	2
3	2559	BOLT	M20 x 2 x 124 mm	2
4	2557	BOLT	M20 x 2 x 83 mm	1
5	2507	GUIDE PIN	Ø35 x 102 mm	1

CHEEFT NUMBER	2111

Caliper Tappet Dust Covers

OEM NUMBER	MN 35.40311.2182 - 81.50802.6024 - DF 1487339 MRT MCK1139 - MCK1288 - 68324854PK10 VLV 85107913 - ZF 0501215022 RVI 5006 028 414 - 5021 179 952

NR	CHEEFT NR	DESCRIPTIONS	DIMENSION	QTY
1	2584	TAPPET DUST COVER		2

CHEEFT NUMBER	2112

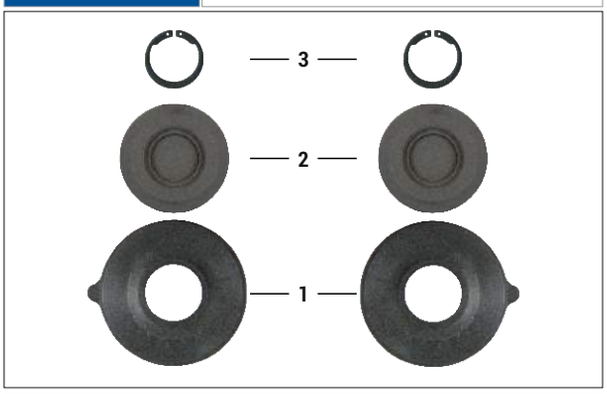

Caliper Piston Tappet & Boot Repair Kit

OEM NUMBER	MN STRMCK1238 - DF 868378 - MCK1238 VLV 3092264 - AMMCK1238 RNLT 5021 202 828

NR	CHEEFT NR	DESCRIPTIONS	DIMENSION	QTY
1	2584	TAPPET DUST EXCLUDER		2
2	2611	TAPPET HEAD		2
3	2613	TAPPET HEAD CIRCLIP		2

ORIGINAL PART NUMBERS,MARKS AND MODELS MENTIONED ARE ONLY FOR DESCRIPTION PURPOSES.

D DUCO AXIAL TYPE

CHEEFT NUMBER	2113

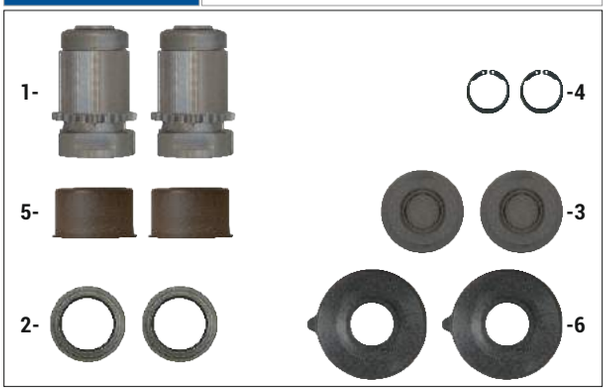

Caliper Adjuster Tappet Repair Kit (Left)

OEM NUMBER	MCK1236 - VLV 3092262

NR	CHEEFT NR	DESCRIPTIONS	DIMENSION	QTY
1	2608	MECHANISM (LEFT)		2
2	2579	DUST EXCLUDER RETAINER	Ø63,5 x 11,5 mm	2
3	2611	TAPPET HEAD		2
4	2613	TAPPET HEAD CIRCLIP		2
5	2532	FIBER BUSH	Ø49 x Ø45 x 30 mm	2
6	2584	TAPPET DUST EXCLUDER		2

CHEEFT NUMBER	2114

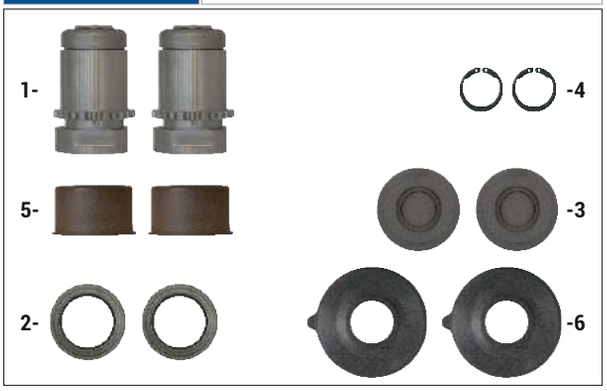

Caliper Adjuster Tappet Repair Kit (Right)

OEM NUMBER	MCK1237 - MCK1239 VLV 3092263 - 3095642

NR	CHEEFT NR	DESCRIPTIONS	DIMENSION	QTY
1	2609	MECHANISM (RIGHT)		2
2	2579	DUST EXCLUDER RETAINER	Ø63,5 x 11,5 mm	2
3	2611	TAPPET HEAD		2
4	2613	TAPPET HEAD CIRCLIP		2
5	2532	FIBER BUSH	Ø49 x Ø45 x 30 mm	2
6	2584	TAPPET DUST EXCLUDER		2

CHEEFT NUMBER	2255

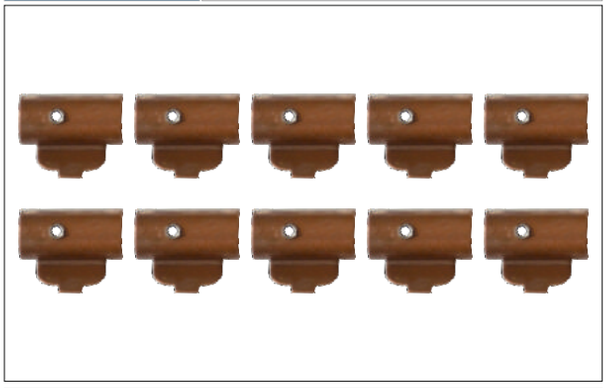

Caliper Lever Bushes Kit

OEM NUMBER	

NR	CHEEFT NR	DESCRIPTIONS	DIMENSION	QTY
1	2633	LEVER BUSH		10

ORIGINAL PART NUMBERS,MARKS AND MODELS MENTIONED ARE ONLY FOR DESCRIPTION PURPOSES.

D DUCO AXIAL TYPE

CHEEFT NUMBER	2070

Caliper Bearing Repair Kit (Axial)

OEM NUMBER	DF 1522169 - SJ4112 - VLV 3092329

NR	CHEEFT NR	DESCRIPTIONS	DIMENSION	QTY
1	2071	ROLLER BEARINGS		1
2	2633	LEVER BUSH		2
3	2634	ROLLER		2

CHEEFT NUMBER	2120

Caliper Lever Repair Kit (Axial Left - Rear)

OEM NUMBER	SJ4096 - MCK1398 VLV 3092258 - 21109753 - 85109975

NR	CHEEFT NR	DESCRIPTIONS	DIMENSION	QTY
1	2691	LEVER (LEFT - REAR)		1
2	2070	CALIPER BEARING REPAIR KIT		1
3	2628	ACTUATOR SEAL		1

CHEEFT NUMBER	2121

Caliper Lever Repair Kit (Axial Right - Rear)

OEM NUMBER	SJ4097 - MCK1399 VLV 3092259 - 21109754 - 85109976

NR	CHEEFT NR	DESCRIPTIONS	DIMENSION	QTY
1	2692	LEVER (RIGHT - REAR)		1
2	2070	CALIPER BEARING REPAIR KIT		1
3	2628	ACTUATOR SEAL		1

ORIGINAL PART NUMBERS,MARKS AND MODELS MENTIONED ARE ONLY FOR DESCRIPTION PURPOSES.

D DUCO AXIAL TYPE

CHEEFT NUMBER	2209

Caliper Adjuster Seal & Boot Repair Kit

OEM NUMBER	

NR	CHEEFT NR	DESCRIPTIONS	DIMENSION	QTY
1	2192	ADJUSTER DUST BOOT		1
2	2704	DUST COVER RETAINER	Ø30 x 4 mm	1
3	2627	ADJUSTER SEAL		1

CHEEFT NUMBER	2125

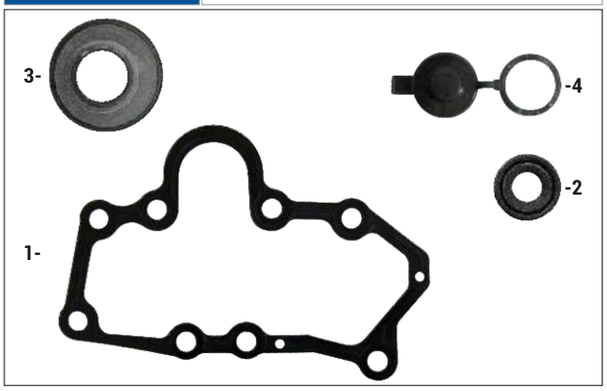

Caliper Cover Seal Repair Kit

OEM NUMBER	SJ4105 - VLV 3092269

NR	CHEEFT NR	DESCRIPTIONS	DIMENSION	QTY
1	2625	COVER GASKET		1
2	2627	ADJUSTER SEAL		1
3	2628	ACTUATOR SEAL		1
4	2192	ADJUSTER DUST BOOT		1

CHEEFT NUMBER	2226

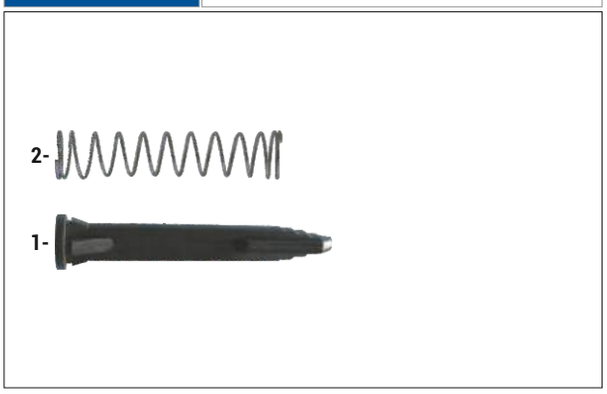

Caliper Visual Indicator

OEM NUMBER	SJ4111 - VLV 3092283

NR	CHEEFT NR	DESCRIPTIONS	DIMENSION	QTY
1	2722	VISUAL INDICATOR		1
2	2670	SPRING OF VISUAL INDICATOR	Ø16 x 80 mm	1

ORIGINAL PART NUMBERS,MARKS AND MODELS MENTIONED ARE ONLY FOR DESCRIPTION PURPOSES.

D DUCO AXIAL TYPE

CHEEFT NUMBER	2115

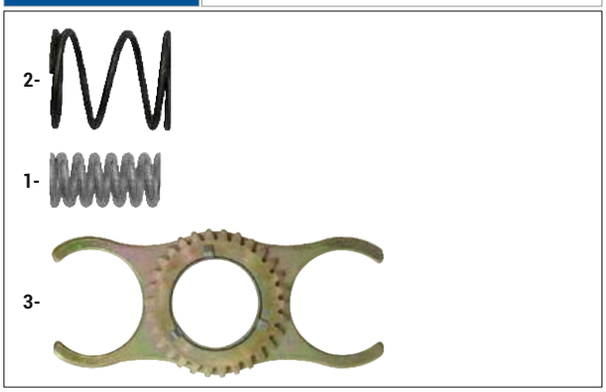

Caliper Gear & Spring Repair Kit

OEM NUMBER	MCK1067 - VLV 3095626

NR	CHEEFT NR	DESCRIPTIONS	DIMENSION	QTY
1	2665	COMPRESSION SPRING		1
2	2718	COMPRESSION SPRING		1
3	2648	INTERMEDIATE GEAR		1

CHEEFT NUMBER	2221

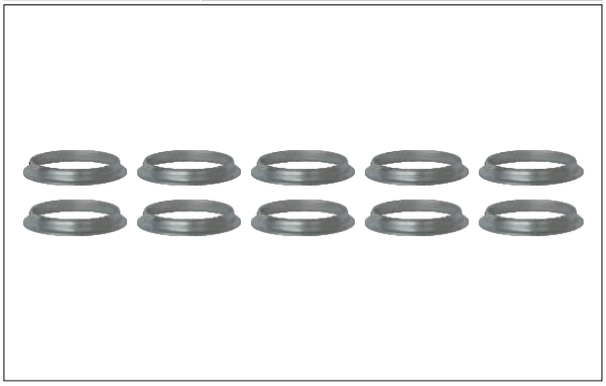

Caliper Dust Excluder Retainer Kit

OEM NUMBER	

NR	CHEEFT NR	DESCRIPTIONS	DIMENSION	QTY
1	2703	DUST EXCLUDER RETAINER	Ø37,5 x 5,5 mm	10

CHEEFT NUMBER	2310

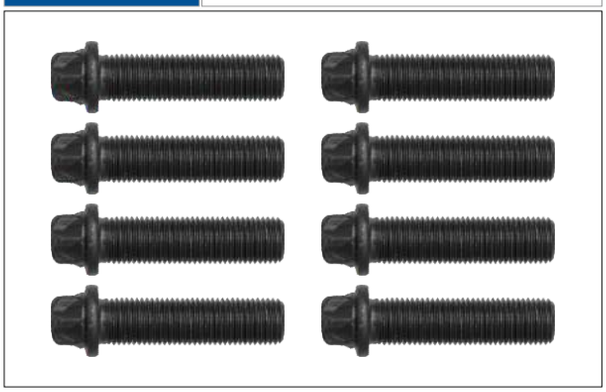

Cover Bolt Kit

OEM NUMBER	

NR	CHEEFT NR	DESCRIPTIONS	DIMENSION	QTY
1	2814	COVER BOLT	M14 x 1,5 x 55 mm	8

ORIGINAL PART NUMBERS,MARKS AND MODELS MENTIONED ARE ONLY FOR DESCRIPTION PURPOSES.

D DUCO AXIAL TYPE

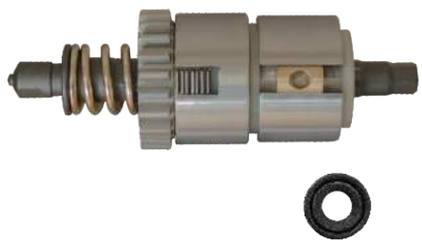

locks clockwise / turns freely anti-clockwise

Caliper Automatic Adjuster (Right)

CHEEFT NUMBER	2118
OEM NUMBER	SJ4103 - MCK1112 VLV 3092266 - 85102096

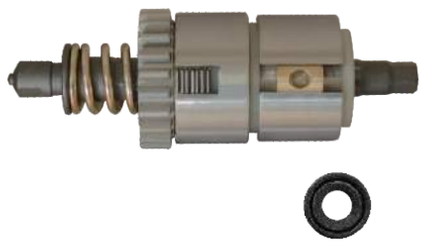

locks anti-clockwise / turns freely clockwise

Caliper Automatic Adjuster (Left)

CHEEFT NUMBER	2119
OEM NUMBER	SJ4102 - MCK1111 VLV 3092265 - 85102095

Caliper Tappet Anti-Rotation Plate

CHEEFT NUMBER	2123
OEM NUMBER	68322900

Caliper Adjuster Dust Boot

CHEEFT NUMBER	2192
OEM NUMBER	MRT 68322655 - 68322655PK10 MN 81.50810.0005 - PCCR 1489071 VLV 3092282 - AM68322655 RNLT 5006 028 417

Caliper Pad Retainer Repair Kit

CHEEFT NUMBER	2253
OEM NUMBER	MCK1264 - VLV 3092276 - 3092277

ORIGINAL PART NUMBERS,MARKS AND MODELS MENTIONED ARE ONLY FOR DESCRIPTION PURPOSES.

D DUCO AXIAL TYPE

Caliper Roller Bearings	
CHEEFT NUMBER	2071
OEM NUMBER	

Caliper Gear Mechanism (Right)	
CHEEFT NUMBER	2249
OEM NUMBER	68322563 - VLV 3092280

Caliper Gear Mechanism (Left)	
CHEEFT NUMBER	2250
OEM NUMBER	68322562 - VLV 3092281

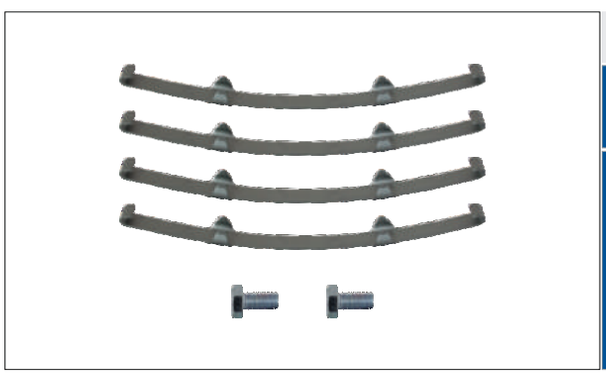

Caliper Pad Spring Kit	
CHEEFT NUMBER	2162
OEM NUMBER	MBA104 MRT

ORIGINAL PART NUMBERS,MARKS AND MODELS MENTIONED ARE ONLY FOR DESCRIPTION PURPOSES.

D DUCO AXIAL TYPE

VLV SET (RIGHT)

CHEEFT NUMBER	CHS2012

1

3

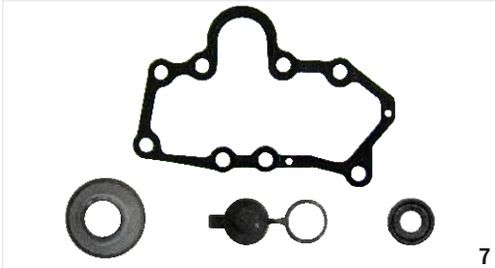
7

4

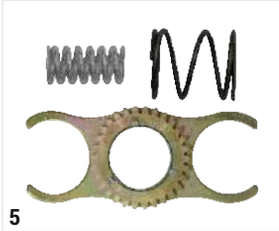
5

6

8

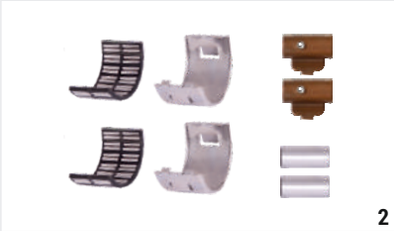
2

NR	CHEEFT NR	DESCRIPTIONS	QTY
1	2109	GUIDES & SEALS REPAIR KIT	1
2	2070	BEARING REPAIR KIT (AXIAL)	1
3	2114	ADJUSTER TAPPET REPAIR KIT (RIGHT)	1
4	2118	AUTOMATIC ADJUSTER (RIGHT)	1
5	2115	GEAR & SPRINGS REPAIR KIT	1
6	2123	TAPPET ANTI-ROTATION PLATE	1
7	2125	COVER SEAL REPAIR KIT	1
8	2226	VISUAL INDICATOR	1

VLV SET (LEFT)

CHEEFT NUMBER	CHS2013

1

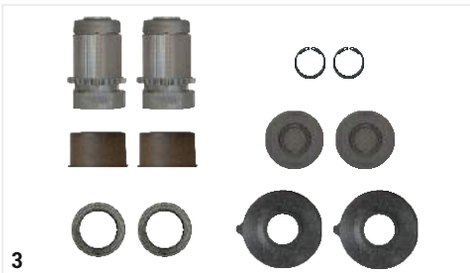
3

7

4

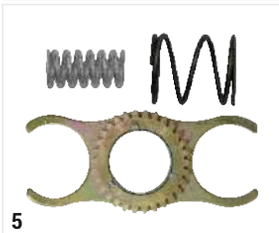
5

6

8

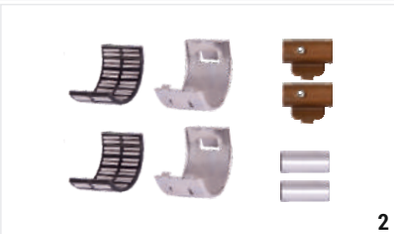
2

NR	CHEEFT NR	DESCRIPTIONS	QTY
1	2109	GUIDES & SEALS REPAIR KIT	1
2	2070	BEARING REPAIR KIT (AXIAL)	1
3	2113	ADJUSTER TAPPET REPAIR KIT (LEFT)	1
4	2119	AUTOMATIC ADJUSTER (LEFT)	1
5	2115	GEAR & SPRINGS REPAIR KIT	1
6	2123	TAPPET ANTI-ROTATION PLATE	1
7	2125	COVER SEAL REPAIR KIT	1
8	2226	VISUAL INDICATOR	1

ORIGINAL PART NUMBERS,MARKS AND MODELS MENTIONED ARE ONLY FOR DESCRIPTION PURPOSES.

COHEEFT®

AIR DISC BRAKE CALIPER REPAIR KITS

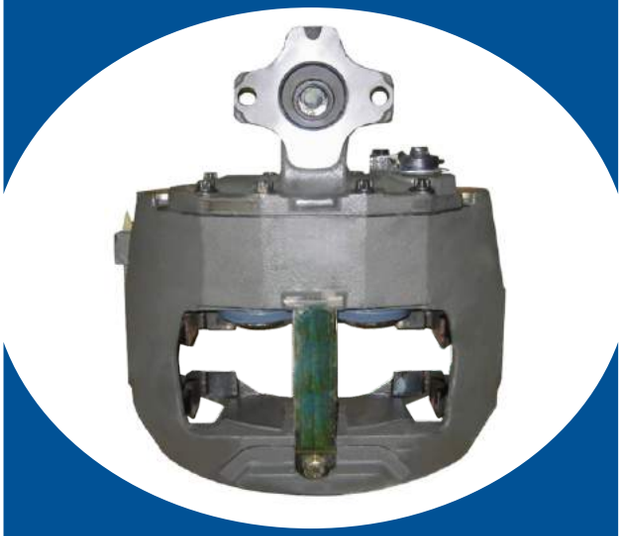

MRT

MRT

D DUCO RADIAL TYPE

Always the Best...

EAC CE UDEM JAS-ANZ ISO 9001 2015

D DUCO RADIAL TYPE

CHEEFT NUMBER	2108

Caliper Guides & Seals Repair Kit

OEM NUMBER	MCK1118 - VLV 85102092

NR	CHEEFT NR	DESCRIPTIONS	DIMENSION	QTY
1	2507	GUIDE PIN	Ø35 x 102 mm	2
2	2559	BOLT	M20 x 2 x 124 mm	2
3	2530	FIBER BUSH	Ø39,50 x Ø35 x 76,70 mm	1
4	2525	BRONZE OVAL BUSH	Ø39 x Ø36,2/35,3 x 30 mm	2
5	2542	STEEL CAP	Ø40 x 20 mm	2
6	2571	DUST EXCLUDER RETAINER	Ø40 x 11,5 mm	2
7	2582	DUST EXCLUDER		2

CHEEFT NUMBER	2284

Caliper Guides & Seals Repair Kit

OEM NUMBER	SJ4107 - DF 1522166 - MCK1135 VLV 3092256 - 3096788 - 85103891

NR	CHEEFT NR	DESCRIPTIONS	DIMENSION	QTY
1	2507	GUIDE PIN	Ø35 x 102 mm	2
2	2559	BOLT	M20 x 2 x 124 mm	2
3	2773	FIBER BUSH	Ø39 x Ø35 x 38 mm	2
4	2525	BRONZE OVAL BUSH	Ø39 x Ø36,2/35,3 x 30 mm	2
5	2542	STEEL CAP	Ø40 x 20 mm	2
6	2571	DUST EXCLUDER RETAINER	Ø40 x 11,5 mm	2
7	2582	DUST EXCLUDER		2

CHEEFT NUMBER	2110

Caliper Guides & Seals Repair Kit

OEM NUMBER	MCK1065 - MCK1066

NR	CHEEFT NR	DESCRIPTIONS	DIMENSION	QTY
1	2507	GUIDE PIN	Ø35 x 102 mm	1
2	2542	STEEL CAP	Ø40 x 20 mm	2
3	2582	DUST EXCLUDER		2

ORIGINAL PART NUMBERS,MARKS AND MODELS MENTIONED ARE ONLY FOR DESCRIPTION PURPOSES.

D DUCO RADIAL TYPE

CHEEFT NUMBER	2264

Caliper Guides & Seals Repair Kit

OEM NUMBER	MN STRMCK1299 - MRT MCK1299 VLV 3092268 - 3095628 - 3096769 - 85107718 AMMCK1299 - PCCR Y07100312 - DF 1522170

NR	CHEEFT NR	DESCRIPTIONS	DIMENSION	QTY
1	2582	DUST EXCLUDER		2
2	2542	STEEL CAP	Ø40 x 20 mm	2
3	2559	BOLT	M20 x 2 x 124 mm	2
4	2557	BOLT	M20 x 2 x 83 mm	1
5	2507	GUIDE PIN	Ø35 x 102 mm	1

CHEEFT NUMBER	2111

Caliper Tappet Dust Covers

OEM NUMBER	MN 35.40311.2182 - 81.50802.6024 - DF 1487339 MRT MCK1139 - MCK1288 - 68324854PK10 VLV 85107913 - ZF 0501215022 RVI 5006 028 414 - 5021 179 952

NR	CHEEFT NR	DESCRIPTIONS	DIMENSION	QTY
1	2584	TAPPET DUST COVER		2

CHEEFT NUMBER	2112

Caliper Piston Tappet & Boot Repair Kit

OEM NUMBER	MN STRMCK1238 - DF 868378 - MCK1238 VLV 3092264 - AMMCK1238 RNLT 5021 202 828

NR	CHEEFT NR	DESCRIPTIONS	DIMENSION	QTY
1	2584	TAPPET DUST EXCLUDER		2
2	2611	TAPPET HEAD		2
3	2613	TAPPET HEAD CIRCLIP		2

ORIGINAL PART NUMBERS,MARKS AND MODELS MENTIONED ARE ONLY FOR DESCRIPTION PURPOSES.

D DUCO RADIAL TYPE

CHEEFT NUMBER	2114

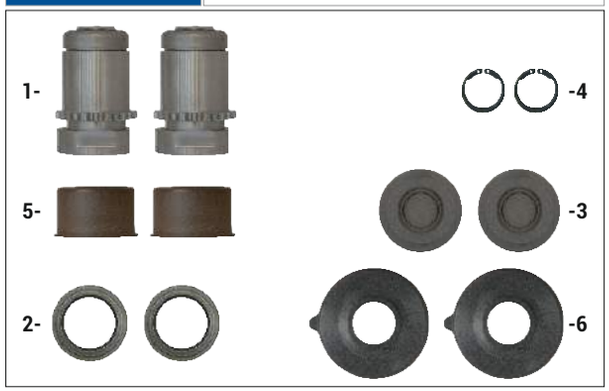

Caliper Adjuster Tappet Repair Kit (Right)

OEM NUMBER	MCK1237 - MCK1239 VLV 3092263 - 3095642

NR	CHEEFT NR	DESCRIPTIONS	DIMENSION	QTY
1	2609	MECHANISM (RIGHT)		2
2	2579	DUST EXCLUDER RETAINER	Ø63,5 x 11,5 mm	2
3	2611	TAPPET HEAD		2
4	2613	TAPPET HEAD CIRCLIP		2
5	2532	FIBER BUSH	Ø49 x Ø45 x 30 mm	2
6	2584	TAPPET DUST EXCLUDER		2

CHEEFT NUMBER	2256

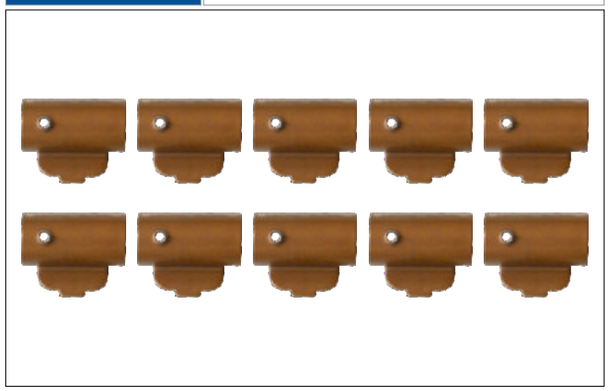

Caliper Lever Bushes Kit

OEM NUMBER	

NR	CHEEFT NR	DESCRIPTIONS	DIMENSION	QTY
1	2672	LEVER BUSH		10

CHEEFT NUMBER	2204

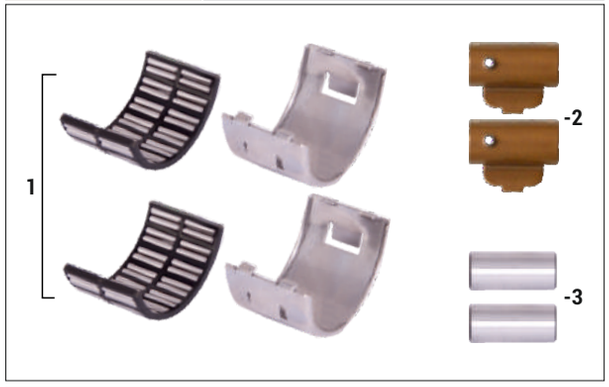

Caliper Bearing Repair Kit (Radial)

OEM NUMBER	SJ4098 - VLV 3092261

NR	CHEEFT NR	DESCRIPTIONS	DIMENSION	QTY
1	2071	ROLLER BEARINGS		1
2	2672	LEVER BUSH		2
3	2634	ROLLER		2

ORIGINAL PART NUMBERS,MARKS AND MODELS MENTIONED ARE ONLY FOR DESCRIPTION PURPOSES.

D DUCO RADIAL TYPE

CHEEFT NUMBER	2122

Caliper Lever Repair Kit (Radial L/R - Front)

OEM NUMBER	DF 1522167 - MRT SJ4108 VLV 3092260 - 21109755 - 85109977

NR	CHEEFT NR	DESCRIPTIONS	DIMENSION	QTY
1	2693	LEVER (RADIAL L/R - FRONT)		1
2	2204	BEARING REPAIR KIT (RADIAL)		1
3	2628	ACTUATOR SEAL		1

CHEEFT NUMBER	2208

Caliper Adjuster Seal & Boot Repair Kit

OEM NUMBER	

NR	CHEEFT NR	DESCRIPTIONS	DIMENSION	QTY
1	2163	ADJUSTER DUST BOOT		1
2	2704	DUST COVER RETAINER	Ø30 x 4 mm	1
3	2627	ADJUSTER SEAL		1

CHEEFT NUMBER	2124

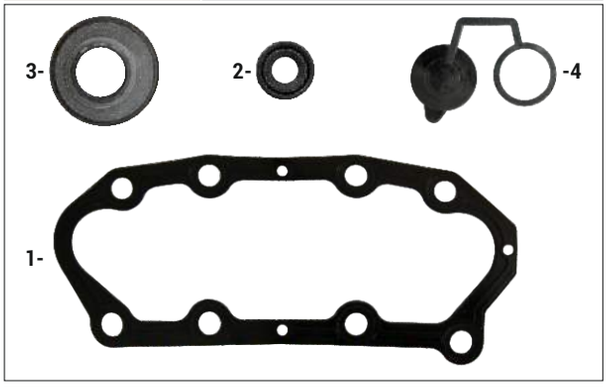

Caliper Cover Seal Repair Kit

OEM NUMBER	SJ4109 - DF 1522168 - VLV 3092270

NR	CHEEFT NR	DESCRIPTIONS	DIMENSION	QTY
1	2624	COVER GASKET		1
2	2627	ADJUSTER SEAL		1
3	2628	ACTUATOR SEAL		1
4	2163	ADJUSTER DUST BOOT		1

ORIGINAL PART NUMBERS,MARKS AND MODELS MENTIONED ARE ONLY FOR DESCRIPTION PURPOSES.

D DUCO RADIAL TYPE

CHEEFT NUMBER	2115

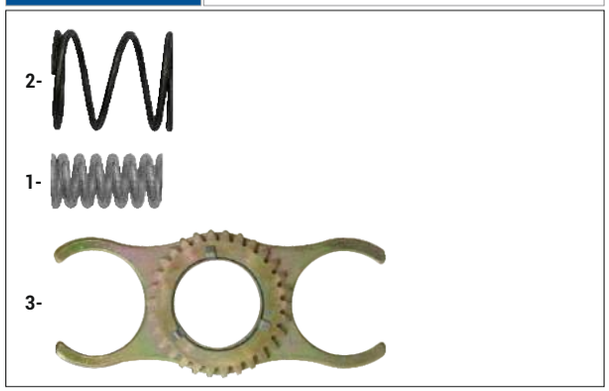

Caliper Gear & Spring Repair Kit

OEM NUMBER	MCK1067 - VLV 3095626

NR	CHEEFT NR	DESCRIPTIONS	DIMENSION	QTY
1	2665	COMPRESSION SPRING		1
2	2718	COMPRESSION SPRING		1
3	2648	INTERMEDIATE GEAR		1

CHEEFT NUMBER	2226

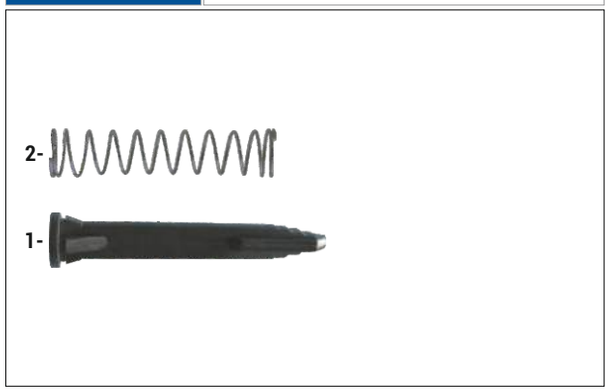

Caliper Visual Indicator

OEM NUMBER	SJ4111 - VLV 3092283

NR	CHEEFT NR	DESCRIPTIONS	DIMENSION	QTY
1	2722	VISUAL INDICATOR		1
2	2670	SPRING OF VISUAL INDICATOR	Ø16 x 80 mm	1

CHEEFT NUMBER	2310

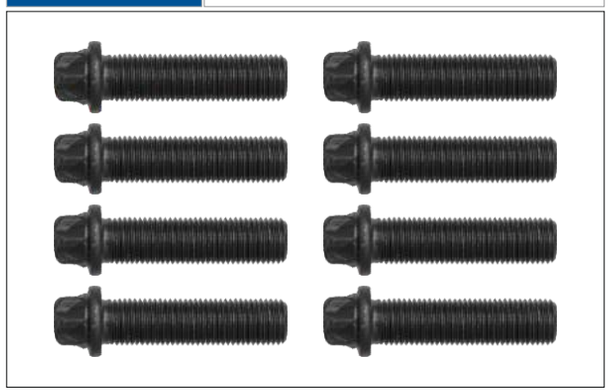

Cover Bolt Kit

OEM NUMBER	

NR	CHEEFT NR	DESCRIPTIONS	DIMENSION	QTY
1	2814	COVER BOLT	M14 x 1,5 x 55 mm	8

ORIGINAL PART NUMBERS,MARKS AND MODELS MENTIONED ARE ONLY FOR DESCRIPTION PURPOSES.

D DUCO RADIAL TYPE

Caliper Roller Bearings

CHEEFT NUMBER	2071
OEM NUMBER	

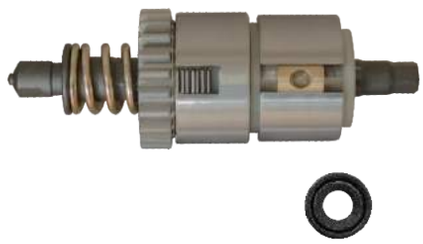

locks clockwise / turns freely anti-clockwise

Caliper Automatic Adjuster (Right)

CHEEFT NUMBER	2118
OEM NUMBER	SJ4103 - MCK1112 VLV 3092266 - 85102096

Caliper Tappet Anti-Rotation Plate

CHEEFT NUMBER	2123
OEM NUMBER	68322900

Caliper Adjuster Dust Boot

CHEEFT NUMBER	2163
OEM NUMBER	

Caliper Pad Retainer Repair Kit

CHEEFT NUMBER	2253
OEM NUMBER	MCK1264 - VLV 3092276 - 3092277

ORIGINAL PART NUMBERS,MARKS AND MODELS MENTIONED ARE ONLY FOR DESCRIPTION PURPOSES.

D DUCO RADIAL TYPE

CHEEFT NUMBER	2221

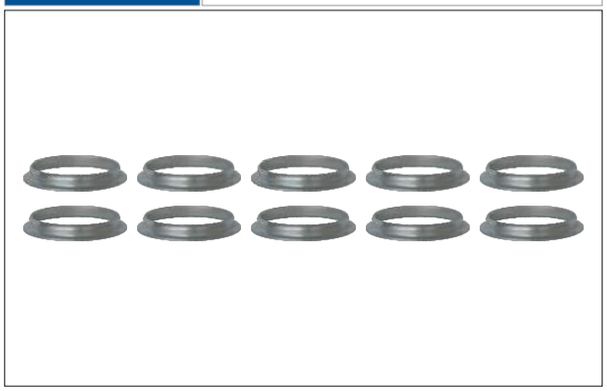

Caliper Dust Excluder Retainer Kit

OEM NUMBER	

NR	CHEEFT NR	DESCRIPTIONS	DIMENSION	QTY
1	2703	DUST EXCLUDER RETAINER	Ø37,5 x 5,5 mm	10

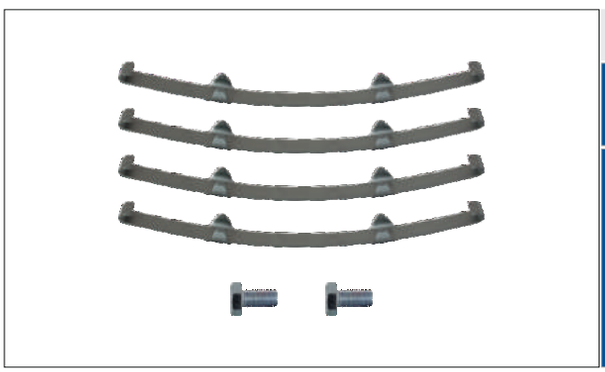

Caliper Pad Spring Kit

CHEEFT NUMBER	2162
OEM NUMBER	MBA104 MRT

Caliper Gear Mechanism (Right)

CHEEFT NUMBER	2249
OEM NUMBER	68322563 - VLV 3092280

ORIGINAL PART NUMBERS,MARKS AND MODELS MENTIONED ARE ONLY FOR DESCRIPTION PURPOSES.

D DUCO RADIAL TYPE

VLV SET RADIAL FRONT (LEFT-RIGHT)	CHEEFT NUMBER	CHS2014

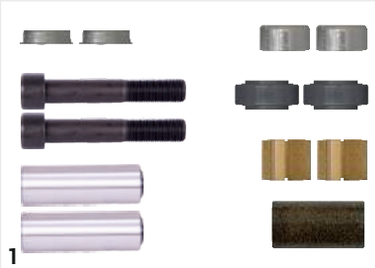
1

3

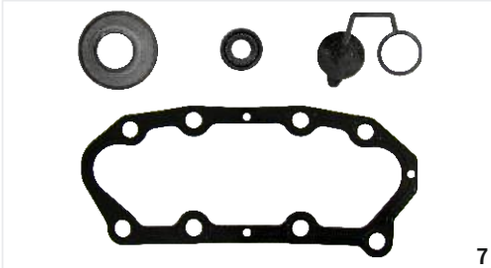
7

4

5

6

8

2

NR	CHEEFT NR	DESCRIPTIONS	QTY
1	2108	GUIDES & SEALS REPAIR KIT	1
2	2204	BEARING REPAIR KIT (RADIAL)	1
3	2114	ADJUSTER TAPPET REPAIR KIT (RIGHT)	1
4	2118	AUTOMATIC ADJUSTER (RIGHT)	1
5	2115	GEAR & SPRINGS REPAIR KIT	1
6	2123	TAPPET ANTI-ROTATION PLATE	1
7	2124	COVER SEAL REPAIR KIT	1
8	2226	VISUAL INDICATOR	1

ORIGINAL PART NUMBERS,MARKS AND MODELS MENTIONED ARE ONLY FOR DESCRIPTION PURPOSES.

C-HEEFT®
AIR DISC BRAKE CALIPER REPAIR KITS

MRT

C LISA TYPE

Always the Best...

EAC CE UDEM JAS-ANZ ISO 9001 2015

C-HEEFT®

AIR DISC BRAKE CALIPER REPAIR KITS

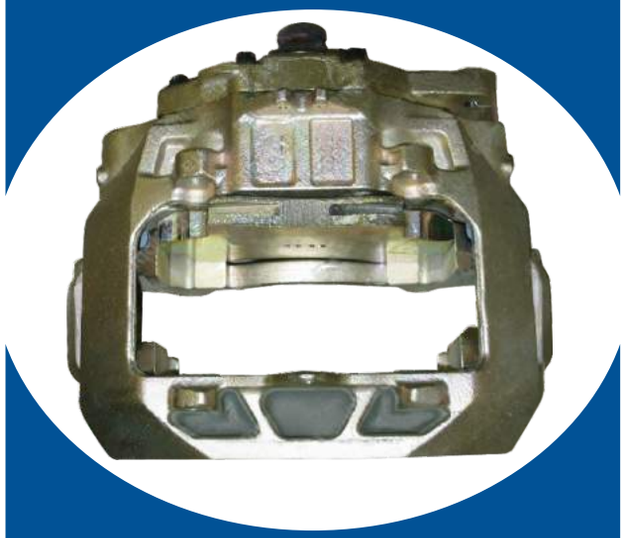

MRT

C LISA TYPE

Always the Best...

EAC CE UDEM JAS-ANZ ISO 9001 2015

C LISA TYPE

CHEEFT NUMBER	2051

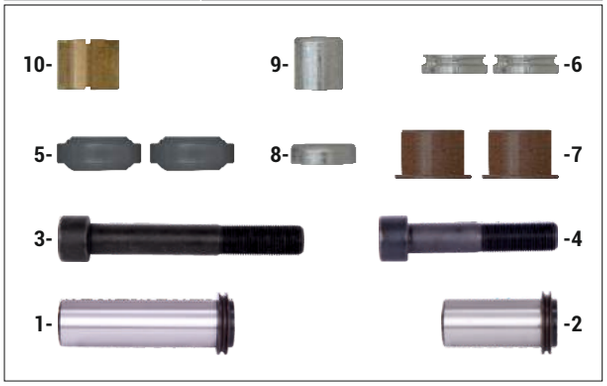

Caliper Guides & Seals Repair Kit

OEM NUMBER	SJ4052 - DF 1522192 RNLT 5001 845 385 - NSSN 69029720

NR	CHEEFT NR	DESCRIPTIONS	DIMENSION	QTY
1	2520	GUIDE PIN	Ø30 x 115 mm	1
2	2538	GUIDE PIN	Ø30 x 75 mm	1
3	2550	BOLT	M18 x 1,5 x 135 mm	1
4	2554	BOLT	M18 x 1,5 x 95 mm	1
5	2596	DUST EXCLUDER		2
6	2570	DUST EXCLUDER RETAINER	Ø42 x 12 mm	2
7	2610	FIBER BUSH	Ø30 x Ø34 x 26 mm	2
8	2541	STEEL CAP	Ø37 x 11 mm	1
9	2549	STEEL CAP	Ø42 x 45 mm	1
10	2539	BUSH	Ø34 x Ø30/30,5 x 26 mm	1

CHEEFT NUMBER	2196

Caliper Bush & Bearing Repair Kit

OEM NUMBER	SJ4031 - VLV 8550893 - NSSN 69029760 DNNS 6553778 - 6553779

NR	CHEEFT NR	DESCRIPTIONS	DIMENSION	QTY
1	2591	SHAFT ROLLER BEARING	Ø72,5 / Ø46 x 8,5 mm	1
2	2615	WASHER	Ø73 / Ø47 mm	1
3	2592	SHAFT ROLLER BEARING	Ø52 / Ø46 x 16 mm	1
4	2531	PLAIN BUSH	Ø44 x Ø40 x 15 mm	1
5	2578	DUST EXCLUDER RETAINER	Ø44 x 13 mm	1

CHEEFT NUMBER	2152

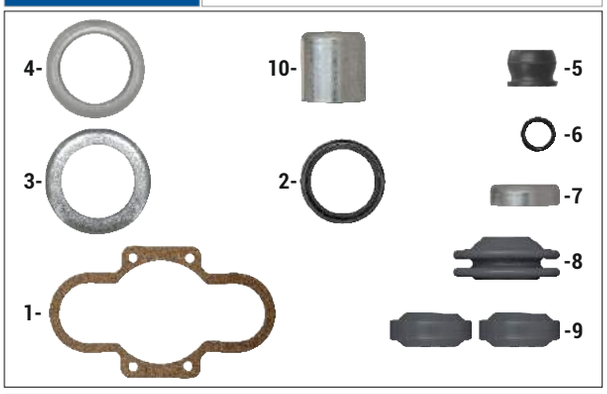

Caliper Overhaul Seal Kit

OEM NUMBER	SJ4061 - NSSN 69029770

NR	CHEEFT NR	DESCRIPTIONS	DIMENSION	QTY
1	2620	COVER GASKET		1
2	2617	SHAFT INNER SEAL	Ø52 / Ø39 mm	1
3	2619	SEAL COVER	Ø62 x Ø42 x 6 mm	1
4	2618	SHAFT OUTER SEAL	Ø57 / Ø40 mm	1
5	2621	DUST PLUG		1
6	2622	O-RING		1
7	2541	STEEL CAP	Ø37 x 11 mm	1
8	2586	TAPPET DUST EXCLUDER		1
9	2596	DUST EXCLUDER		2
10	2549	STEEL CAP	Ø42 x 45 mm	1

ORIGINAL PART NUMBERS,MARKS AND MODELS MENTIONED ARE ONLY FOR DESCRIPTION PURPOSES.

C LISA TYPE

CHEEFT NUMBER	2222

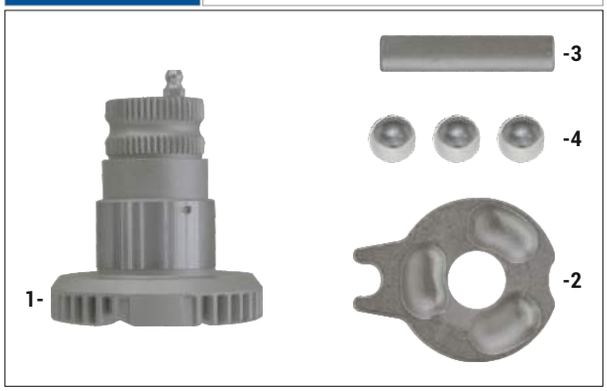

NR	CHEEFT NR	DESCRIPTIONS	DIMENSION	QTY
1	2654	SPLINE SHAFT (LEFT)		1
2	2656	SPLINE SHAFT BEARING (LEFT)		1
3	2658	ANTI ROTATION PIN		1
4	2647	STEEL BALL		3

Caliper Shaft Repair Kit (Left)

OEM NUMBER	MCK1021 - MCK1151 - VLV 85104827 NSSN 69029750 - DNNS 6553776

CHEEFT NUMBER	2223

NR	CHEEFT NR	DESCRIPTIONS	DIMENSION	QTY
1	2655	SPLINE SHAFT (RIGHT)		1
2	2657	SPLINE SHAFT BEARING (RIGHT)		1
3	2658	ANTI ROTATION PIN		1
4	2647	STEEL BALL		3

Caliper Shaft Repair Kit (Right)

OEM NUMBER	MCK1022 - MCK1152 - VLV 85104828 NSSN 69030040 - DNNS 6553784 CAMCK1152

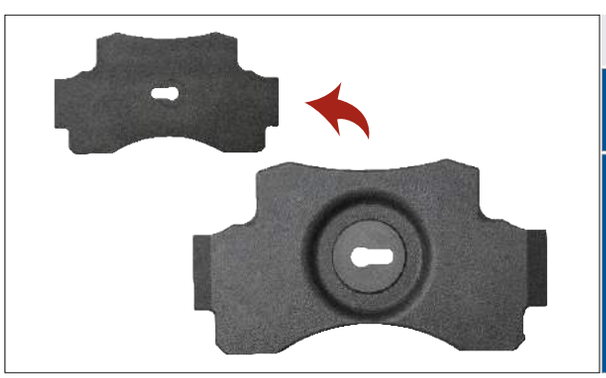

Caliper Push Plate

CHEEFT NUMBER	2150
OEM NUMBER	

ORIGINAL PART NUMBERS,MARKS AND MODELS MENTIONED ARE ONLY FOR DESCRIPTION PURPOSES.

C LISA TYPE

CHEEFT NUMBER	2129

NR	CHEEFT NR	DESCRIPTIONS	DIMENSION	QTY
1	2774	ADJUSTER GEAR (LEFT)		1
2	2667	SPRING		1

Caliper Adjuster Gear (Left)

OEM NUMBER	SJ4073 - VLV 3098110 - DNNS 65656410 RVI 5001 845 386

CHEEFT NUMBER	2130

NR	CHEEFT NR	DESCRIPTIONS	DIMENSION	QTY
1	2775	ADJUSTER GEAR (RIGHT)		1
2	2667	SPRING		1

Caliper Adjuster Gear (Right)

OEM NUMBER	SJ4074 - VLV 3098111 - DNNS 6565652 RNLT 5001 845 387

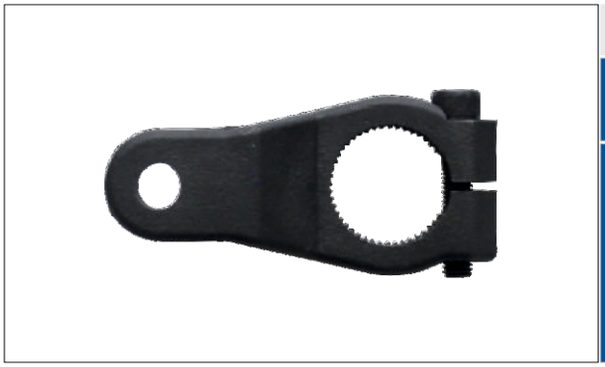

Caliper Shaft Lever

CHEEFT NUMBER	2151
OEM NUMBER	68915080 - 68915081 DNNS 6464646 - 6565645

ORIGINAL PART NUMBERS,MARKS AND MODELS MENTIONED ARE ONLY FOR DESCRIPTION PURPOSES.

C LISA TYPE

CHEEFT NUMBER	2116

Caliper Cover Assembly Bolt Kit

OEM NUMBER	

NR	CHEEFT NR	DESCRIPTIONS	DIMENSION	QTY
1	2567	SPRING		1

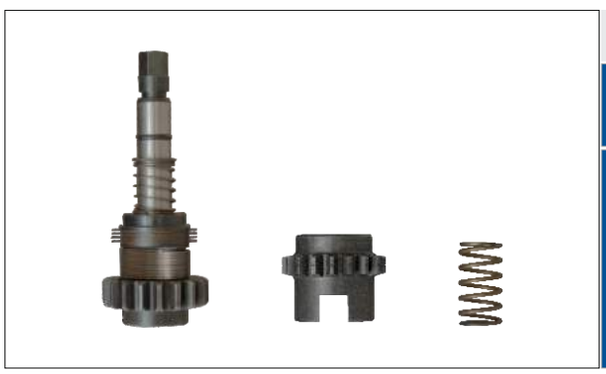

Caliper Adjusting Mechanism (Left)

CHEEFT NUMBER	2131
OEM NUMBER	SJ4113 - VLV 3092763 - NSSN 69029730 DNNS CASSJ4113 - DEP100073 LEYLAND XBU1066 - RVI 5001 856 319

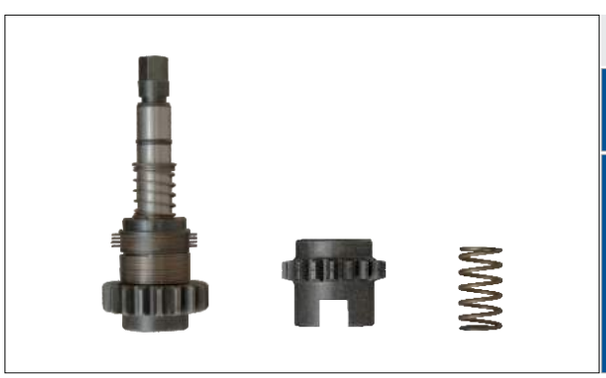

Caliper Adjusting Mechanism (Right)

CHEEFT NUMBER	2132
OEM NUMBER	SJ4114 - VLV 3092764 - RNLT 5001 856 320 NSSN 69030020 - DNNS CASJ4114 - DEP100074 LEYLAND LBSJ4114

ORIGINAL PART NUMBERS,MARKS AND MODELS MENTIONED ARE ONLY FOR DESCRIPTION PURPOSES.

C LISA TYPE

C LISA REPAIR SET (RIGHT)

CHEEFT NUMBER	CHS2029

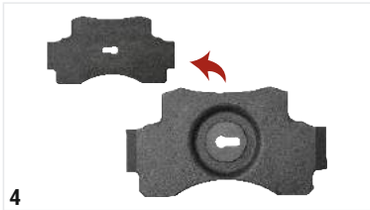

NR	CHEEFT NR	DESCRIPTIONS	QTY
1	2051	GUIDES & SEALS REPAIR KIT	1
2	2130	ADJUSTER GEAR (RIGHT)	1
3	2132	ADJUSTING MECHANISM (RIGHT)	1
4	2150	PUSH PLATE	1
5	2151	SHAFT LEVER	1
6	2620	COVER GASKET	1
7	2617	SHAFT INNER SEAL Ø52 / Ø39 mm	1
8	2619	SEAL COVER Ø62 x Ø42 x 6 mm	1
9	2618	SHAFT OUTER SEAL Ø57 / Ø40 mm	1
10	2621	DUST PLUG	1

NR	CHEEFT NR	DESCRIPTIONS	QTY
11	2622	O-RING	1
12	2586	TAPPET DUST EXCLUDER	1
13	2196	BUSH & BEARING KIT	1
14	2223	SHAFT REPAIR KIT (RIGHT)	1

C LISA REPAIR SET (LEFT)

CHEEFT NUMBER	CHS2030

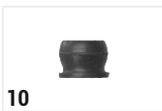

NR	CHEEFT NR	DESCRIPTIONS	QTY
1	2051	GUIDES & SEALS REPAIR KIT	1
2	2129	ADJUSTER GEAR (LEFT)	1
3	2131	ADJUSTING MECHANISM (LEFT)	1
4	2150	PUSH PLATE	1
5	2151	SHAFT LEVER	1
6	2620	COVER GASKET	1
7	2617	SHAFT INNER SEAL Ø57 / Ø39 mm	1
8	2619	SEAL COVER Ø62 x Ø42 x 6 mm	1
9	2618	SHAFT OUTER SEAL Ø57 / Ø40 mm	1
10	2621	DUST PLUG	1

NR	CHEEFT NR	DESCRIPTIONS	QTY
11	2622	O-RING	1
12	2586	TAPPET DUST EXCLUDER	1
13	2196	BUSH & BEARING KIT	1
14	2222	SHAFT REPAIR KIT (LEFT)	1

ORIGINAL PART NUMBERS,MARKS AND MODELS MENTIONED ARE ONLY FOR DESCRIPTION PURPOSES.

COHEEFT®

AIR DISC BRAKE CALIPER REPAIR KITS

MRT

D LISA TYPE

Always the Best...

EAC CE UDEM JAS-ANZ ISO 9001 2015

D LISA TYPE

CHEEFT NUMBER	2128

Caliper Guides & Seals Repair Kit

OEM NUMBER	MCK1104 - RNLT 5001 837 006 - SJ4076 VLV 3098108 - 85103129 - 8550880 DF 1522184 - DNNS 6553777 - 6565644

NR	CHEEFT NR	DESCRIPTIONS	DIMENSION	QTY
1	2506	GUIDE PIN	Ø35 x 79 mm	1
2	2508	GUIDE PIN	Ø35 x 132 mm	1
3	2566	BOLT	M20 x 1,5 x 100 mm	1
4	2560	BOLT	M20 x 1,5 x 150 mm	1
5	2521	PLAIN BUSH	Ø39 x Ø35 x 30 mm	2
6	2523	PLAIN BUSH	Ø41 x Ø35 x 30 mm	2
7	2526	BRONZE OVAL BUSH	Ø39 x Ø36,2/35,3 x 47,5 mm	1
8	2546	STEEL CAP	Ø45 x 17 mm	2
9	2576	DUST EXCLUDER RETAINER	Ø47 x 12,5 mm	2
10	2582	DUST EXCLUDER		2

CHEEFT NUMBER	2196

Caliper Bush & Bearing Repair Kit

OEM NUMBER	SJ4031 - VLV 8550893 - NSSN 69029760 DNNS 6553778 - 6553779

NR	CHEEFT NR	DESCRIPTIONS	DIMENSION	QTY
1	2591	SHAFT ROLLER BEARING	Ø72,5 / Ø46 x 8,5 mm	1
2	2615	WASHER	Ø73 / Ø47 mm	1
3	2592	SHAFT ROLLER BEARING	Ø52 / Ø46 x 16 mm	1
4	2531	PLAIN BUSH	Ø44 x Ø40 x 15 mm	1
5	2578	DUST EXCLUDER RETAINER	Ø44 x 13 mm	1

CHEEFT NUMBER	2198

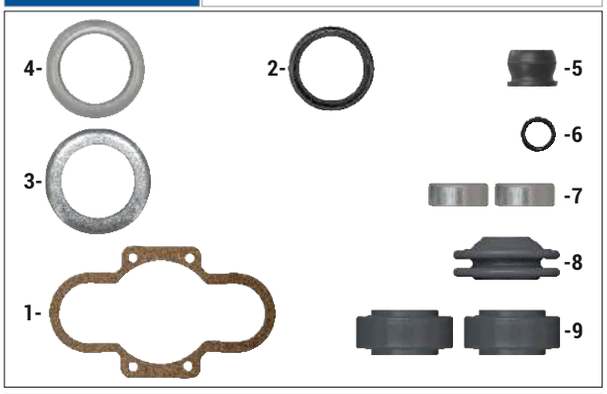

Caliper Overhaul Seal Kit

OEM NUMBER	SJ4078 - SJ4032 VLV 3097526 - 3098113 - 8550895 DNNS 6553773 - 6565643 - DEP100080

NR	CHEEFT NR	DESCRIPTIONS	DIMENSION	QTY
1	2620	COVER GASKET		1
2	2617	SHAFT INNER SEAL	Ø52 / Ø39 mm	1
3	2619	SEAL COVER	Ø62 x Ø42 x 6 mm	1
4	2618	SHAFT OUTER SEAL	Ø57 / Ø40 mm	1
5	2621	DUST PLUG		1
6	2622	O-RING		1
7	2546	STEEL CAP	Ø45 x 17 mm	2
8	2586	TAPPET DUST EXCLUDER		1
9	2582	DUST EXCLUDER		2

ORIGINAL PART NUMBERS,MARKS AND MODELS MENTIONED ARE ONLY FOR DESCRIPTION PURPOSES.

D LISA TYPE

CHEEFT NUMBER	2222

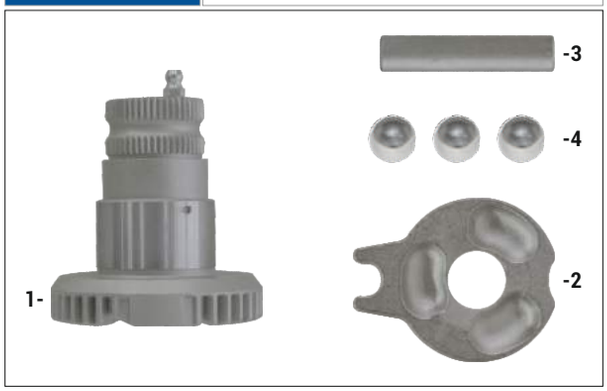

Caliper Shaft Repair Kit (Left)

OEM NUMBER	MCK1021 - MCK1151 - VLV 85104827 NSSN 69029750 - DNNS 6553776

NR	CHEEFT NR	DESCRIPTIONS	DIMENSION	QTY
1	2654	SPLINE SHAFT (LEFT)		1
2	2656	SPLINE SHAFT BEARING (LEFT)		1
3	2658	ANTI ROTATION PIN		1
4	2647	STEEL BALL		3

CHEEFT NUMBER	2223

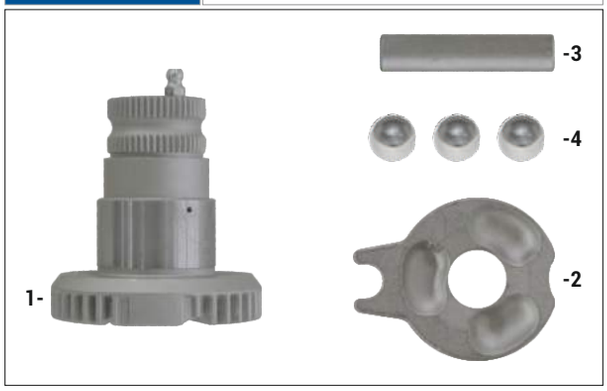

Caliper Shaft Repair Kit (Right)

OEM NUMBER	MCK1022 - MCK1152 - VLV 85104828 NSSN 69030040 - DNNS 6553784 CAMCK1152

NR	CHEEFT NR	DESCRIPTIONS	DIMENSION	QTY
1	2655	SPLINE SHAFT (RIGHT)		1
2	2657	SPLINE SHAFT BEARING (RIGHT)		1
3	2658	ANTI ROTATION PIN		1
4	2647	STEEL BALL		3

CHEEFT NUMBER	2266

Caliper Bolt & Cap Kit

OEM NUMBER	SJ4021 - VLV 8550881 - DNNS 65537710

NR	CHEEFT NR	DESCRIPTIONS	DIMENSION	QTY
1	2566	BOLT	M20 x 1,5 x 100 mm	1
2	2560	BOLT	M20 x 1,5 x 150 mm	1
3	2546	STEEL CAP	Ø45 x 17 mm	2

ORIGINAL PART NUMBERS,MARKS AND MODELS MENTIONED ARE ONLY FOR DESCRIPTION PURPOSES.

D LISA TYPE

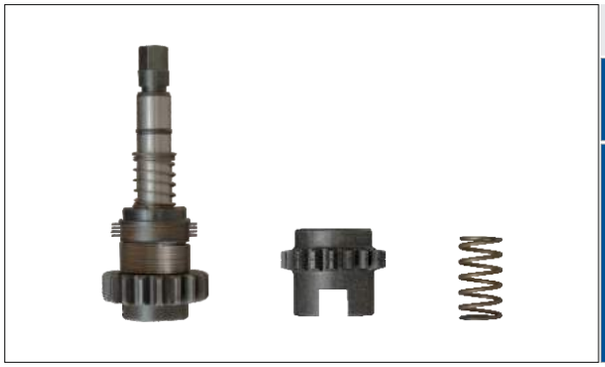

Caliper Adjusting Mechanism (Left)

CHEEFT NUMBER	2131
OEM NUMBER	SJ4113 - VLV 3092763 - NSSN 69029730 DNNS CASSJ4113 - DEP100073 LEYLAND XBU1066 - RVI 5001 856 319

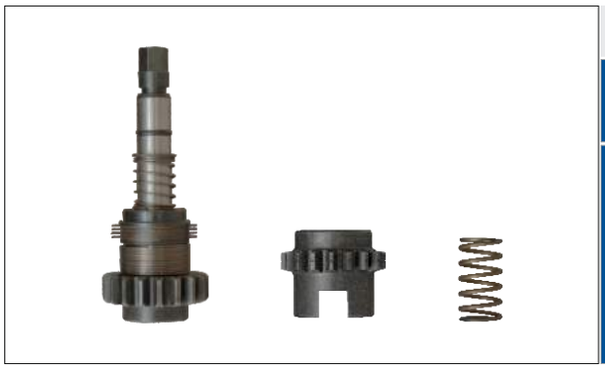

Caliper Adjusting Mechanism (Right)

CHEEFT NUMBER	2132
OEM NUMBER	SJ4114 - VLV 3092764 - RNLT 5001 856 320 NSSN 69030020 - DNNS CASJ4114 - DEP100074 LEYLAND LBSJ4114

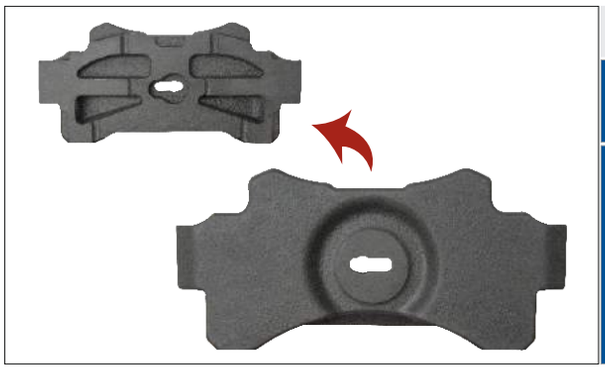

Caliper Push Plate

CHEEFT NUMBER	2190
OEM NUMBER	MRT SJ4117 - 68321441 - VLV 3092765 NSSN 69029810 - DNNS 65537714

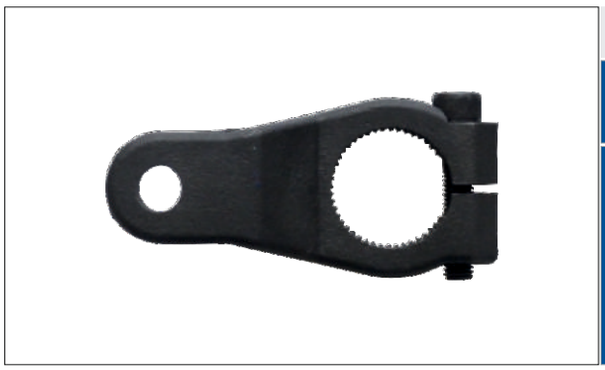

Caliper Shaft Lever

CHEEFT NUMBER	2151
OEM NUMBER	68915080 - 68915081 DNNS 6464646 - 6565645

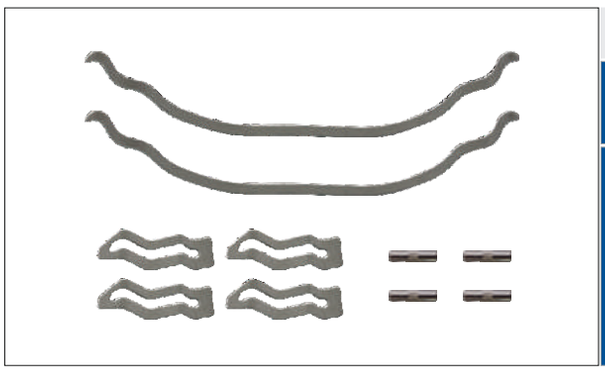

Caliper Pad Spring Set

CHEEFT NUMBER	2180
OEM NUMBER	MBA101 MRT

ORIGINAL PART NUMBERS,MARKS AND MODELS MENTIONED ARE ONLY FOR DESCRIPTION PURPOSES.

D LISA TYPE

CHEEFT NUMBER	2129

Caliper Adjuster Gear (Left)

OEM NUMBER	SJ4073 - VLV 3098110 - DNNS 65656410 RVI 5001 845 386

NR	CHEEFT NR	DESCRIPTIONS	DIMENSION	QTY
1	2774	ADJUSTER GEAR (LEFT)		1
2	2667	SPRING		1

CHEEFT NUMBER	2130

Caliper Adjuster Gear (Right)

OEM NUMBER	SJ4074 - VLV 3098111 - DNNS 6565652 RNLT 5001 845 387

NR	CHEEFT NR	DESCRIPTIONS	DIMENSION	QTY
1	2775	ADJUSTER GEAR (RIGHT)		1
2	2667	SPRING		1

CHEEFT NUMBER	2116

Caliper Cover Assembly Bolt Kit

OEM NUMBER	

NR	CHEEFT NR	DESCRIPTIONS	DIMENSION	QTY
1	2567	SPRING		1

ORIGINAL PART NUMBERS,MARKS AND MODELS MENTIONED ARE ONLY FOR DESCRIPTION PURPOSES.

D LISA TYPE

RNLT 370-390-400 SET (LEFT)

CHEEFT NUMBER	CHS2006

1

14

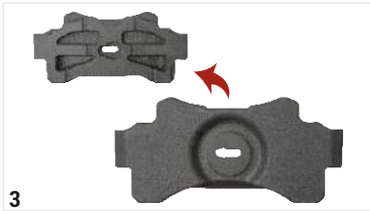
3

2

12

4

5

11

13

8

7

6

9

10

NR	CHEEFT NR	DESCRIPTIONS	QTY
1	2128	GUIDES & SEALS REPAIR KIT	1
2	2129	ADJUSTER GEAR (LEFT)	1
3	2190	CALIPER PUSH PLATE	1
4	2131	ADJUSTING MECHANISM (LEFT)	1
5	2196	BUSH & BEARING KIT	1
6	2618	SHAFT OUTER SEAL Ø57 / Ø40 mm	1
7	2619	SEAL COVER Ø62 / Ø42 x 6 mm	1
8	2617	SHAFT INNER SEAL Ø52 / Ø39 mm	1
9	2621	DUST PLUG	1
10	2622	O-RING	1

NR	CHEEFT NR	DESCRIPTIONS	QTY
11	2620	COVER GASKET	1
12	2222	SHAFT REPAIR KIT (LEFT)	1
13	2586	TAPPET DUST EXCLUDER	1
14	2151	SHAFT LEVER	1

RNLT 370-390-400 SET (RIGHT)

CHEEFT NUMBER	CHS2007

1

14

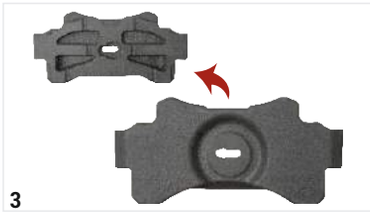
3

2

12

4

5

11

13

8

7

6

9

10

NR	CHEEFT NR	DESCRIPTIONS	QTY
1	2128	GUIDES & SEALS REPAIR KIT	1
2	2130	ADJUSTER GEAR (RIGHT)	1
3	2190	PUSH PLATE	1
4	2132	ADJUSTING MECHANISM (RIGHT)	1
5	2196	BUSH & BEARING KIT	1
6	2618	SHAFT OUTER SEAL Ø57 / Ø40 mm	1
7	2619	SEAL COVER Ø62 x Ø42 x 6 mm	1
8	2617	SHAFT INNER SEAL Ø52 / Ø39 mm	1
9	2621	DUST PLUG	1
10	2622	O-RING	1

NR	CHEEFT NR	DESCRIPTIONS	QTY
11	2620	COVER GASKET	1
12	2223	SHAFT REPAIR KIT (RIGHT)	1
13	2586	TAPPET DUST EXCLUDER	1
14	2151	SHAFT LEVER	1

ORIGINAL PART NUMBERS,MARKS AND MODELS MENTIONED ARE ONLY FOR DESCRIPTION PURPOSES.

COHEEFT®

AIR DISC BRAKE CALIPER REPAIR KITS

MRT

D3 TYPE

Always the Best...

EAC CE

UDEM JAS-ANZ ISO 9001 2015

D3 TYPE

CHEEFT NUMBER	2083

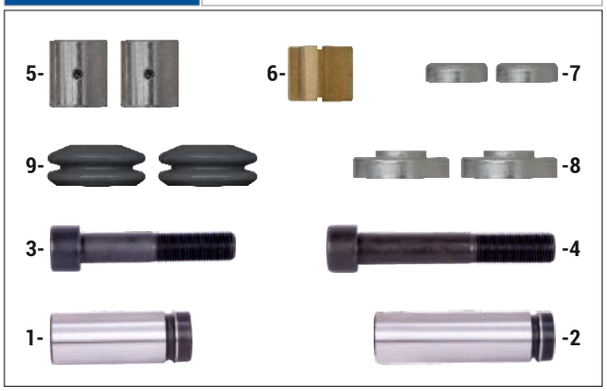

Caliper Guides & Seals Repair Kit

OEM NUMBER	SJ4011 - MCK1213 - MB 000 420 0276 DNNS 65507911 MN 81.50802.6008 - 81.50802.6009

NR	CHEEFT NR	DESCRIPTIONS	DIMENSION	QTY
1	2502	GUIDE PIN	Ø32 x 73 mm	1
2	2503	GUIDE PIN	Ø32 x 117 mm	1
3	2554	BOLT	M18 x 1,5 x 95 mm	1
4	2555	BOLT	M18 x 1,5 x 120 mm	1
5	2522	PLAIN BUSH	Ø36 x Ø32 x 40 mm	2
6	2524	BRONZE OVAL BUSH	Ø36 x Ø32,80/32 x 30mm	1
7	2541	STEEL CAP	Ø37 x 11 mm	2
8	2547	STEEL CAP	Ø61 x 17 mm	2
9	2581	DUST EXCLUDER		2

CHEEFT NUMBER	2265

Caliper Guides & Seals Repair Kit

OEM NUMBER	SJ4001 - RNLT 5001 822 99 5001 822 998

NR	CHEEFT NR	DESCRIPTIONS	DIMENSION	QTY
1	2502	GUIDE PIN	Ø32 x 73 mm	1
2	2503	GUIDE PIN	Ø32 x 117 mm	1
3	2554	BOLT	M18 x 1,5 x 95 mm	1
4	2555	BOLT	M18 x 1,5 x 120 mm	1
5	2541	STEEL CAP	Ø37 x 11 mm	2
6	2547	STEEL CAP	Ø61 x 17 mm	2
7	2581	DUST EXCLUDER		2

CHEEFT NUMBER	2084

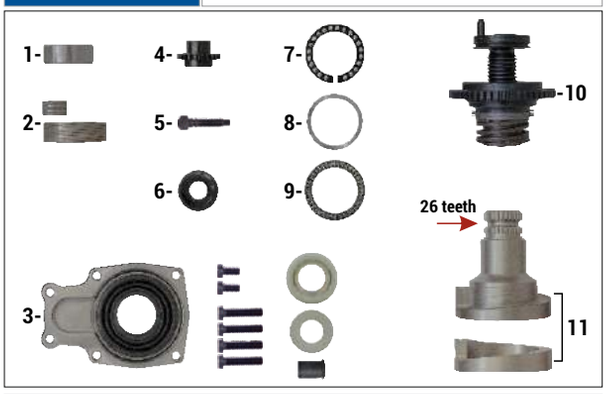

Caliper Overhaul Repair Kit (Front - Left)

OEM NUMBER	

NR	CHEEFT NR	DESCRIPTIONS	DIMENSION	QTY
1	2104	SHAFT BUSH	Ø55 x Ø50 x 20 mm	1
2	2106	SPRING KIT (LEFT)		1
3	2099	DUST COVER & SEALS REPAIR KIT		1
4	2100	GEAR		1
5	2105	ADJUSTER BOLT		1
6	2540	SPRING PLATE		1
7	2102	SHAFT ROLLER BEARING		1
8	2103	WAVY WASHER		1
9	2101	SHAFT ROLLER BEARING		1
10	2184	D3 MECHANISM (LEFT)		1
11	2088	SHAFT ASSEMBLY (SHORT-LEFT)	26 TEETH	1

ORIGINAL PART NUMBERS,MARKS AND MODELS MENTIONED ARE ONLY FOR DESCRIPTION PURPOSES.

D3 TYPE

CHEEFT NUMBER	2085

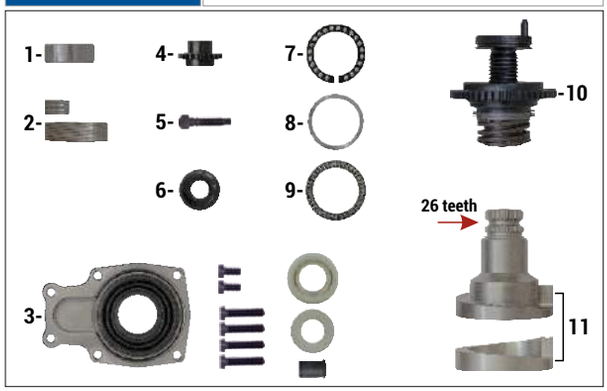

Caliper Overhaul Repair Kit (Front - Right)

OEM NUMBER	

NR	CHEEFT NR	DESCRIPTIONS	DIMENSION	QTY
1	2104	SHAFT BUSH	Ø55 x Ø50 x 20 mm	1
2	2107	SPRING KIT (RIGHT)		1
3	2099	DUST COVER & SEALS REPAIR KIT		1
4	2100	GEAR		1
5	2105	ADJUSTER BOLT		1
6	2540	SPRING PLATE		1
7	2102	SHAFT ROLLER BEARING		1
8	2103	WAVY WASHER		1
9	2101	SHAFT ROLLER BEARING		1
10	2183	D3 MECHANISM (RIGHT)		1
11	2089	SHAFT ASSEMBLY (SHORT-RIGHT)	26 TEETH	1

CHEEFT NUMBER	2086

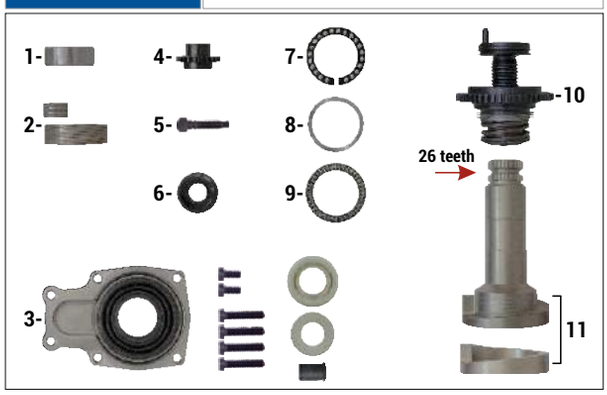

Caliper Overhaul Repair Kit (Rear - Left)

OEM NUMBER	

NR	CHEEFT NR	DESCRIPTIONS	DIMENSION	QTY
1	2104	SHAFT BUSH	Ø55 x Ø50 x 20 mm	1
2	2106	SPRING KIT (LEFT)		1
3	2099	DUST COVER & SEALS REPAIR KIT		1
4	2100	GEAR		1
5	2105	ADJUSTER BOLT		1
6	2540	SPRING PLATE		1
7	2102	SHAFT ROLLER BEARING		1
8	2103	WAVY WASHER		1
9	2101	SHAFT ROLLER BEARING		1
10	2184	D3 MECHANISM (LEFT)		1
11	2092	SHAFT ASSEMBLY (LONG-LEFT)	26 TEETH	1

CHEEFT NUMBER	2087

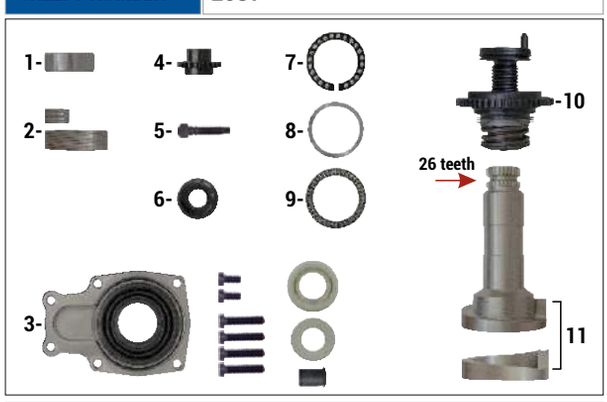

Caliper Overhaul Repair Kit (Rear - Right)

OEM NUMBER	

NR	CHEEFT NR	DESCRIPTIONS	DIMENSION	QTY
1	2104	SHAFT BUSH	Ø55 x Ø50 x 20 mm	1
2	2107	SPRING KIT (RIGHT)		1
3	2099	DUST COVER & SEALS REPAIR KIT		1
4	2100	GEAR		1
5	2105	ADJUSTER BOLT		1
6	2540	SPRING PLATE		1
7	2102	SHAFT ROLLER BEARING		1
8	2103	WAVY WASHER		1
9	2101	SHAFT ROLLER BEARING		1
10	2183	D3 MECHANISM (RIGHT)		1
11	2093	SHAFT ASSEMBLY (LONG-RIGHT)	26 TEETH	1

ORIGINAL PART NUMBERS,MARKS AND MODELS MENTIONED ARE ONLY FOR DESCRIPTION PURPOSES.

D3 TYPE

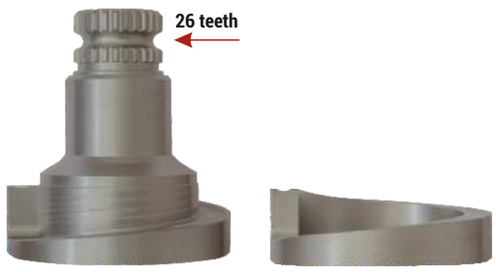

Caliper Shaft Assembly (Short - Left) 26 Teeth	
CHEEFT NUMBER	2088
OEM NUMBER	

Caliper Shaft Assembly (Short - Right) 26 Teeth	
CHEEFT NUMBER	2089
OEM NUMBER	

Caliper Shaft Assembly (Short - Left) 48 Teeth	
CHEEFT NUMBER	2090
OEM NUMBER	

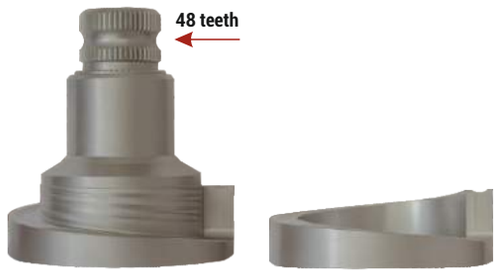

Caliper Shaft Assembly (Short - Right) 48 Teeth	
CHEEFT NUMBER	2091
OEM NUMBER	

Caliper Shaft Assembly (Long - Left) 26 Teeth	
CHEEFT NUMBER	2092
OEM NUMBER	

ORIGINAL PART NUMBERS,MARKS AND MODELS MENTIONED ARE ONLY FOR DESCRIPTION PURPOSES.

D3 TYPE

Caliper Shaft Assembly (Long - Right) 26 Teeth	
CHEEFT NUMBER	2093
OEM NUMBER	

Caliper Shaft Support (Left)	
CHEEFT NUMBER	2094
OEM NUMBER	

Caliper Shaft Support (Right)	
CHEEFT NUMBER	2095
OEM NUMBER	

Caliper Tappet Adjuster Assembly (Left)	
CHEEFT NUMBER	2096
OEM NUMBER	

Caliper Tappet Adjuster Assembly (Right)	
CHEEFT NUMBER	2097
OEM NUMBER	

ORIGINAL PART NUMBERS,MARKS AND MODELS MENTIONED ARE ONLY FOR DESCRIPTION PURPOSES.

D3 TYPE

CHEEFT NUMBER	2055

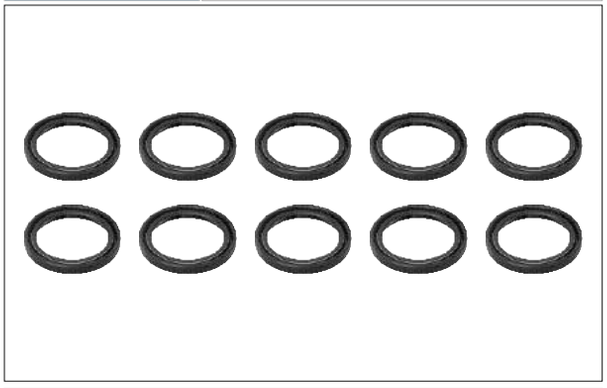

Caliper Seal Kit

OEM NUMBER	

NR	CHEEFT NR	DESCRIPTIONS	DIMENSION	QTY
1	2734	SEAL		10

CHEEFT NUMBER	2056

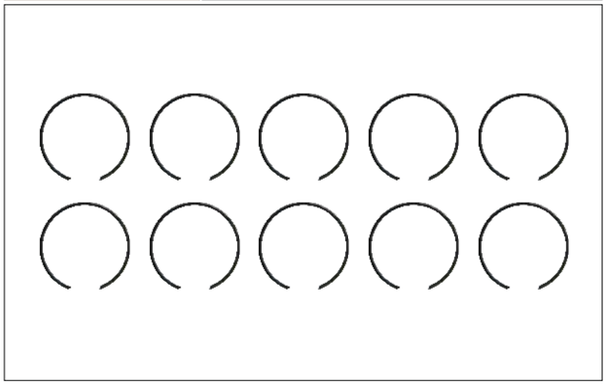

Caliper Circlip Kit

OEM NUMBER	

NR	CHEEFT NR	DESCRIPTIONS	DIMENSION	QTY
1	2674	CIRCLIP	Ø59 x 1,5 mm	10

CHEEFT NUMBER	2057

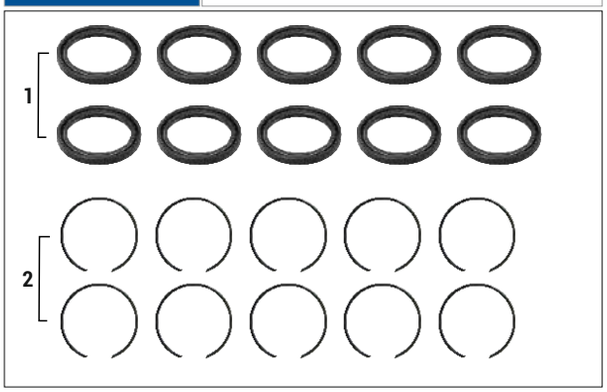

Caliper Seal & Circlip Kit

OEM NUMBER	

NR	CHEEFT NR	DESCRIPTIONS	DIMENSION	QTY
1	2734	SEAL		10
2	2674	CIRCLIP	Ø59 x 1,5 mm	10

ORIGINAL PART NUMBERS,MARKS AND MODELS MENTIONED ARE ONLY FOR DESCRIPTION PURPOSES.

D3 TYPE

CHEEFT NUMBER	2098

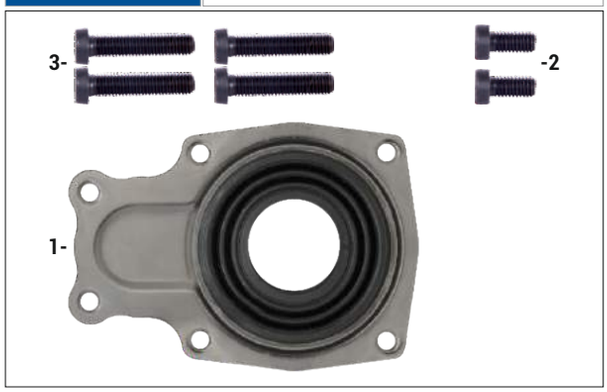

Caliper Dust Cover

OEM NUMBER	MB 0004230082 - MN 81.50802.6007 - RNLT 5001 831 176 MRT SJ1212 - DF 1522063 - ZF 0501208810 - 0501209883 DNNS 6535631 - 65507910 - RABA 650459 KSSBHRR 8285388441

NR	CHEEFT NR	DESCRIPTIONS	DIMENSION	QTY
1	2733	DUST COVER		1
2	2688	BOLT	M8 x 16 mm	2
3	2689	BOLT	M8 x 40 mm	4

CHEEFT NUMBER	2099

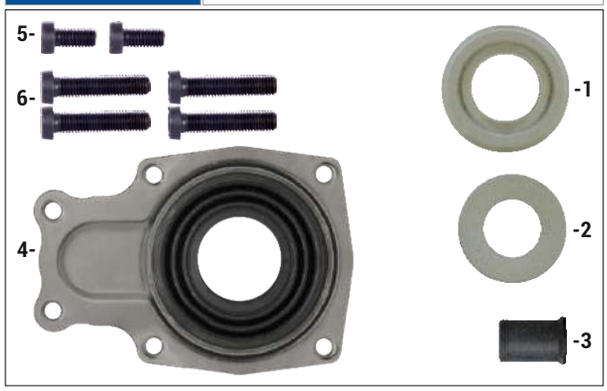

Caliper Dust Cover & Seals Repair Kit

OEM NUMBER	

NR	CHEEFT NR	DESCRIPTIONS	DIMENSION	QTY
1	2629	PLASTIC COVER		1
2	2630	DUST EXCLUDER		1
3	2631	ADJUSTER BOLT COVER		1
4	2733	DUST COVER		1
5	2688	BOLT	M8 x 16 mm	2
6	2689	BOLT	M8 x 40 mm	4

CHEEFT NUMBER	2106

Caliper Spring Kit (Left)

OEM NUMBER	

NR	CHEEFT NR	DESCRIPTIONS	DIMENSION	QTY
1	2661	SPRING (BIG - LEFT)		1
2	2662	SPRING (SMALL - LEFT)		1

ORIGINAL PART NUMBERS,MARKS AND MODELS MENTIONED ARE ONLY FOR DESCRIPTION PURPOSES.

D3 TYPE

CHEEFT NUMBER	2107

Caliper Spring Kit (Right)

OEM NUMBER	

NR	CHEEFT NR	DESCRIPTIONS	DIMENSION	QTY
1	2663	SPRING (BIG - RIGHT)		1
2	2664	SPRING (SMALL - RIGHT)		1

CHEEFT NUMBER	2244

Caliper Repair Kit (Left)

OEM NUMBER	

NR	CHEEFT NR	DESCRIPTIONS	DIMENSION	QTY
1	2662	SPRING (SMALL LEFT)		1
2	2105	ADJUSTER BOLT		1
3	2631	ADJUSTER BOLT COVER		1
4	2100	GEAR		1
5	2706	WAVY WASHER		1
6	2540	SPRING PLATE		1

CHEEFT NUMBER	2245

Caliper Repair Kit (Right)

OEM NUMBER	

NR	CHEEFT NR	DESCRIPTIONS	DIMENSION	QTY
1	2664	SPRING (SMALL RIGHT)		1
2	2105	ADJUSTER BOLT		1
3	2631	ADJUSTER BOLT COVER		1
4	2100	GEAR		1
5	2706	WAVY WASHER		1
6	2540	SPRING PLATE		1

ORIGINAL PART NUMBERS,MARKS AND MODELS MENTIONED ARE ONLY FOR DESCRIPTION PURPOSES.

D3 TYPE

CHEEFT NUMBER	2185

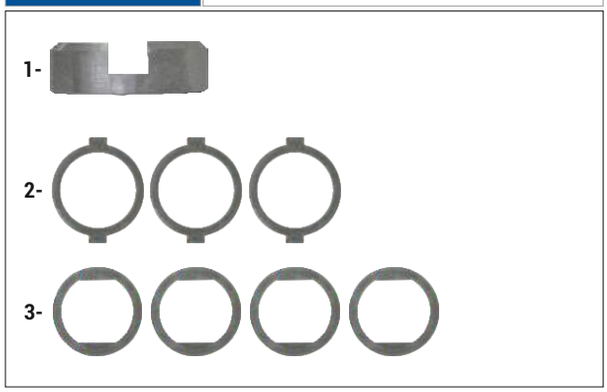

Caliper Washer Repair Kit

OEM NUMBER	

NR	CHEEFT NR	DESCRIPTIONS	DIMENSION	QTY
1	2650	WASHER HOUSING		1
2	2651	WASHER		3
3	2652	WASHER		4

CHEEFT NUMBER	2252

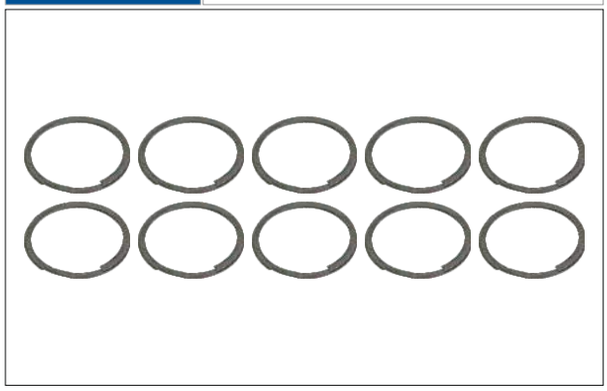

Caliper Calibration Bolt Seal Kit

OEM NUMBER	

NR	CHEEFT NR	DESCRIPTIONS	DIMENSION	QTY
1	2597	CALIBRATION BOLT SEAL		10

CHEEFT NUMBER	2117

Spring Plate Kit

OEM NUMBER	

NR	CHEEFT NR	DESCRIPTIONS	DIMENSION	QTY
1	2540	SPRING PLATE		5

ORIGINAL PART NUMBERS,MARKS AND MODELS MENTIONED ARE ONLY FOR DESCRIPTION PURPOSES.

D3 TYPE

CHEEFT NUMBER	2183

D3 Mechanism (Right)

OEM NUMBER	

NR	CHEEFT NR	DESCRIPTIONS	DIMENSION	QTY
1	2097	TAPPET ADJUSTER ASSEMBLY (RIGHT)		1
2	2186	COMPRESSION SPRING		1
3	2651	WASHER		3
4	2652	WASHER		4
5	2597	CALIBRATION BOLT SEAL		1

CHEEFT NUMBER	2184

D3 Mechanism (Left)

OEM NUMBER	

NR	CHEEFT NR	DESCRIPTIONS	DIMENSION	QTY
1	2096	TAPPET ADJUSTER ASSEMBLY (LEFT)		1
2	2186	COMPRESSION SPRING		1
3	2651	WASHER		3
4	2652	WASHER		4
5	2597	CALIBRATION BOLT SEAL		1

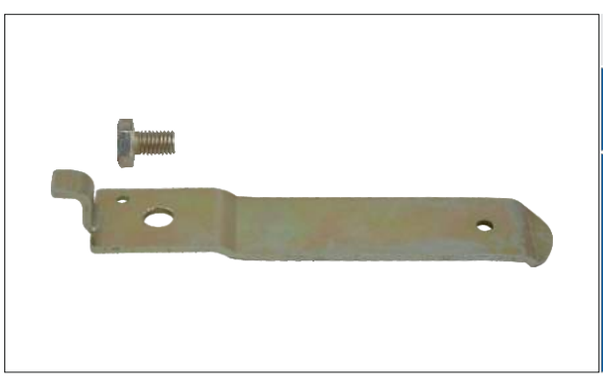

Caliper Pad Retainer Repair Kit

CHEEFT NUMBER	2289
OEM NUMBER	MB 356 421 0046 - MN 81.50822.0001 81.50822.0010 - MRT 68320550 - 68323027 DNNS 6550793 - 6550793 KSSBHRR 8285388450

ORIGINAL PART NUMBERS,MARKS AND MODELS MENTIONED ARE ONLY FOR DESCRIPTION PURPOSES.

D3 TYPE

Caliper Shaft Roller Bearing	
CHEEFT NUMBER	2101
OEM NUMBER	

Caliper Shaft Roller Bearing	
CHEEFT NUMBER	2102
OEM NUMBER	

Caliper Wavy Washer	
CHEEFT NUMBER	2103
OEM NUMBER	68320133

Caliper Shaft Bush Ø55 x Ø50 x 20 mm	
CHEEFT NUMBER	2104
OEM NUMBER	

Caliper Adjuster Bolt	
CHEEFT NUMBER	2105
OEM NUMBER	

ORIGINAL PART NUMBERS,MARKS AND MODELS MENTIONED ARE ONLY FOR DESCRIPTION PURPOSES.

D3 TYPE

Caliper Gear

CHEEFT NUMBER	2100
OEM NUMBER	

Caliper Push Plate

CHEEFT NUMBER	2187
OEM NUMBER	MB 000 423 0062 - MN 81.50822.0003 MRT 68320912 - 68321272 RNLT 5001 822 997 - ZF 0501314109 KSSBHRR 8285388449 - RABA 746871

Compression Spring

CHEEFT NUMBER	2186
OEM NUMBER	

Caliper Shaft Lever (26 teeth)

CHEEFT NUMBER	2061
OEM NUMBER	MN 81.50812.0011 - MRT 31932070 68321507 - 68321508 - VLV 2111686 KSSBHRR 82854415090

Caliper Shaft Lever (48 teeth)

CHEEFT NUMBER	2082
OEM NUMBER	MN 81.50812.0009 - MRT 68321502 VLV 10552713

ORIGINAL PART NUMBERS,MARKS AND MODELS MENTIONED ARE ONLY FOR DESCRIPTION PURPOSES.

D3 TYPE

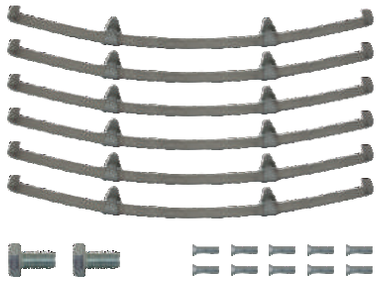

Caliper Pad Spring Kit

CHEEFT NUMBER	2161
OEM NUMBER	MBA108 MRT RNLT 5001 845 969

D3 TYPE 22,5 Inch Caliper Carrier

CHEEFT NUMBER	2316
OEM NUMBER	MRT BDA443

ORIGINAL PART NUMBERS,MARKS AND MODELS MENTIONED ARE ONLY FOR DESCRIPTION PURPOSES.

D3 TYPE

D3 REPAIR SET (SHORT-LEFT)

CHEEFT NUMBER	CHS2023

NR	CHEEFT NR	DESCRIPTIONS	QTY
1	2061	SHAFT LEVER (26 TEETH)	1
2	2083	GUIDES & SEALS REPAIR KIT	1
3	2088	SHAFT ASSEMBLY (SHORT-LEFT 26 TEETH)	1
4	2184	D3 MECHANISM (LEFT)	1
5	2099	DUST COVER & SEALS REPAIR KIT	1
6	2100	GEAR	1
7	2101	SHAFT ROLLER BEARING	1
8	2102	SHAFT ROLLER BEARING	1
9	2103	WAVY WASHER	1
10	2104	SHAFT BUSH	1

NR	CHEEFT NR	DESCRIPTIONS	QTY
11	2105	ADJUSTER BOLT	1
12	2106	SPRING KIT (LEFT)	1
13	2650	WASHER HOUSING	1
14	2187	PUSH PLATE	1
15	2674	CIRCLIP (Ø59 X 1,5 mm)	1
16	2706	WAVY WASHER	1
17	2734	SEAL	1
18	2540	SPRING PLATE	1

D3 REPAIR SET (SHORT-RIGHT)

CHEEFT NUMBER	CHS2024

NR	CHEEFT NR	DESCRIPTIONS	QTY
1	2061	SHAFT LEVER (26 TEETH)	1
2	2083	GUIDES & SEALS REPAIR KIT	1
3	2089	SHAFT ASSEMBLY (SHORT-RIGHT 26 TEETH)	1
4	2183	D3 MECHANISM (RIGHT)	1
5	2099	DUST COVER & SEALS REPAIR KIT	1
6	2100	GEAR	1
7	2101	SHAFT ROLLER BEARING	1
8	2102	SHAFT ROLLER BEARING	1
9	2103	WAVY WASHER	1
10	2104	SHAFT BUSH	1

NR	CHEEFT NR	DESCRIPTIONS	QTY
11	2105	ADJUSTER BOLT	1
12	2107	SPRING KIT (RIGHT)	1
13	2650	WASHER HOUSING	1
14	2187	PUSH PLATE	1
15	2674	CIRCLIP (Ø59 X 1,5 mm)	1
16	2706	WAVY WASHER	1
17	2734	SEAL	1
18	2540	SPRING PLATE	1

ORIGINAL PART NUMBERS,MARKS AND MODELS MENTIONED ARE ONLY FOR DESCRIPTION PURPOSES.

D3 TYPE

D3 REPAIR SET (SHORT-LEFT)

CHEEFT NUMBER	CHS2025

NR	CHEEFT NR	DESCRIPTIONS	QTY
1	2082	SHAFT LEVER (48 TEETH)	1
2	2083	GUIDES & SEALS REPAIR KIT	1
3	2090	SHAFT ASSEMBLY (SHORT-LEFT 48 TEETH)	1
4	2184	D3 MECHANISM (LEFT)	1
5	2099	DUST COVER & SEALS REPAIR KIT	1
6	2100	GEAR	1
7	2101	SHAFT ROLLER BEARING	1
8	2102	SHAFT ROLLER BEARING	1
9	2103	WAVY WASHER	1
10	2104	SHAFT BUSH	1

NR	CHEEFT NR	DESCRIPTIONS	QTY
11	2105	ADJUSTER BOLT	1
12	2106	SPRING KIT (LEFT)	1
13	2650	WASHER HOUSING	1
14	2187	PUSH PLATE	1
15	2674	CIRCLIP (Ø59 X 1,5 mm)	1
16	2706	WAVY WASHER	1
17	2734	SEAL	1
18	2540	SPRING PLATE	1

D3 REPAIR SET (SHORT-RIGHT)

CHEEFT NUMBER	CHS2026

NR	CHEEFT NR	DESCRIPTIONS	QTY
1	2082	SHAFT LEVER (48 TEETH)	1
2	2083	GUIDES & SEALS REPAIR KIT	1
3	2091	SHAFT ASSEMBLY (SHORT-RIGHT 48 TEETH)	1
4	2183	D3 MECHANISM (RIGHT)	1
5	2099	DUST COVER & SEALS REPAIR KIT	1
6	2100	GEAR	1
7	2101	SHAFT ROLLER BEARING	1
8	2102	SHAFT ROLLER BEARING	1
9	2103	WAVY WASHER	1
10	2104	SHAFT BUSH	1

NR	CHEEFT NR	DESCRIPTIONS	QTY
11	2105	ADJUSTER BOLT	1
12	2107	SPRING KIT (RIGHT)	1
13	2650	WASHER HOUSING	1
14	2187	PUSH PLATE	1
15	2674	CIRCLIP (Ø59 X 1,5 mm)	1
16	2706	WAVY WASHER	1
17	2734	SEAL	1
18	2540	SPRING PLATE	1

ORIGINAL PART NUMBERS,MARKS AND MODELS MENTIONED ARE ONLY FOR DESCRIPTION PURPOSES.

D3 TYPE

D3 REPAIR SET (LONG-LEFT)

CHEEFT NUMBER	CHS2027

NR	CHEEFT NR	DESCRIPTIONS	QTY
1	2061	SHAFT LEVER (26 TEETH)	1
2	2083	GUIDES & SEALS REPAIR KIT	1
3	2092	SHAFT ASSEMBLY (LONG-LEFT 26 TEETH)	1
4	2184	D3 MECHANISM (LEFT)	1
5	2099	DUST COVER & SEALS REPAIR KIT	1
6	2100	GEAR	1
7	2101	SHAFT ROLLER BEARING	1
8	2102	SHAFT ROLLER BEARING	1
9	2103	WAVY WASHER	1
10	2104	SHAFT BUSH	1

NR	CHEEFT NR	DESCRIPTIONS	QTY
11	2105	ADJUSTER BOLT	1
12	2106	SPRING KIT (LEFT)	1
13	2650	WASHER HOUSING	1
14	2187	PUSH PLATE	1
15	2674	CIRCLIP (Ø59 X 1,5 mm)	1
16	2706	WAVY WASHER	1
17	2734	SEAL	1
18	2540	SPRING PLATE	1

D3 REPAIR SET (LONG-RIGHT)

CHEEFT NUMBER	CHS2028

NR	CHEEFT NR	DESCRIPTIONS	QTY
1	2061	SHAFT LEVER (26 TEETH)	1
2	2083	GUIDES & SEALS REPAIR KIT	1
3	2093	SHAFT ASSEMBLY (LONG-RIGHT 26 TEETH)	1
4	2183	D3 MECHANISM (RIGHT)	1
5	2099	DUST COVER & SEALS REPAIR KIT	1
6	2100	GEAR	1
7	2101	SHAFT ROLLER BEARING	1
8	2102	SHAFT ROLLER BEARING	1
9	2103	WAVY WASHER	1
10	2104	SHAFT BUSH	1

NR	CHEEFT NR	DESCRIPTIONS	QTY
11	2105	ADJUSTER BOLT	1
12	2107	SPRING KIT (RIGHT)	1
13	2650	WASHER HOUSING	1
14	2187	PUSH PLATE	1
15	2674	CIRCLIP (Ø59 X 1,5 mm)	1
16	2706	WAVY WASHER	1
17	2734	SEAL	1
18	2540	SPRING PLATE	1

ORIGINAL PART NUMBERS,MARKS AND MODELS MENTIONED ARE ONLY FOR DESCRIPTION PURPOSES.

COHEEFT®

AIR DISC BRAKE CALIPER REPAIR KITS

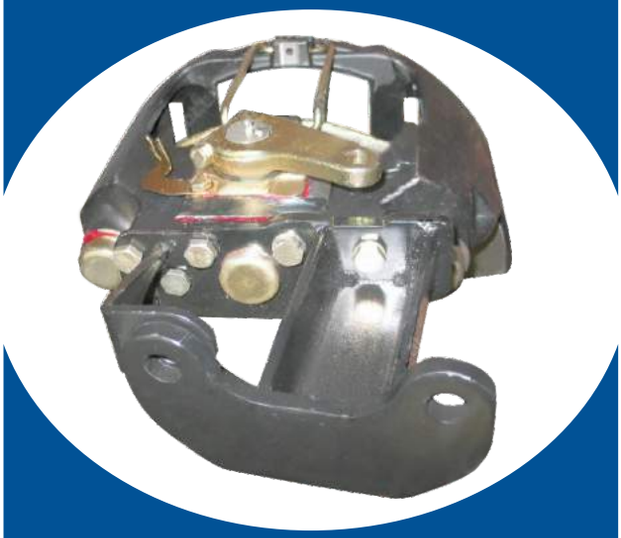

MRT

DX 175 TYPE

Always the Best...

EAC CE UDEM JAS-ANZ ISO 9001 2015

DX 175 TYPE

CHEEFT NUMBER	2303

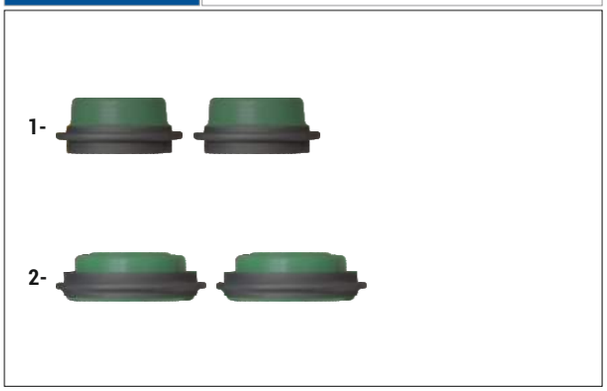

Caliper Boot Repair Kit

OEM NUMBER	

NR	CHEEFT NR	DESCRIPTIONS	DIMENSION	QTY
1	2788	GUIDE PIN DUST EXCLUDER		2
2	2789	BOLT DUST EXCLUDER		2

CHEEFT NUMBER	2302

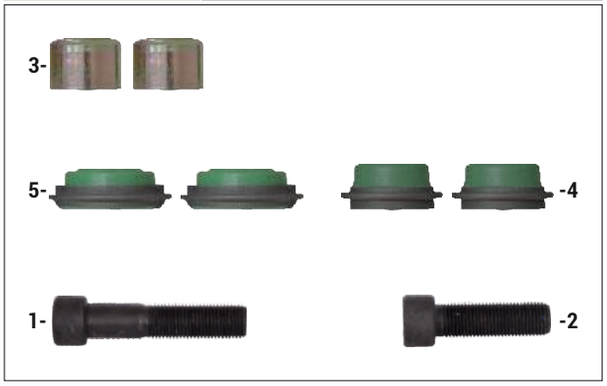

Caliper Seals & Bolts Repair Kit

OEM NUMBER	MCK1191

NR	CHEEFT NR	DESCRIPTIONS	DIMENSION	QTY
1	2784	BOLT	M14 x 1,5 x 70 mm	1
2	2785	BOLT	M14 x 1,5 x 50 mm	1
3	2787	STEEL CAP	Ø37 x 25 mm	2
4	2788	GUIDE PIN DUST EXCLUDER		2
5	2789	BOLT DUST EXCLUDER		2

CHEEFT NUMBER	2300

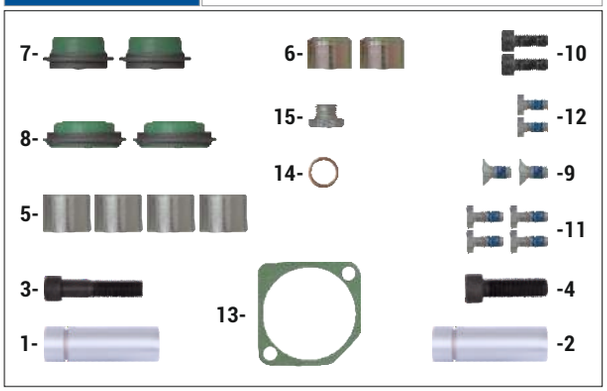

Caliper Guides & Seals Repair Kit

OEM NUMBER	MCK1170

NR	CHEEFT NR	DESCRIPTIONS	DIMENSION	QTY
1	2782	GUIDE PIN	Ø28 x 96/44 mm	1
2	2783	GUIDE PIN	Ø28 x 96/64 mm	1
3	2784	BOLT	M14 x 1,5 x 70 mm	1
4	2785	BOLT	M14 x 1,5 x 50 mm	1
5	2786	BUSH	Ø32 x 28 x 24,8 mm	4
6	2787	STEEL CAP	Ø37 x 25 mm	2
7	2788	GUIDE PIN DUST EXCLUDER		2
8	2789	BOLT DUST EXCLUDER		2
9	2807	BOLT	M10 x 1,50 x 20 mm	2
10	2806	BOLT	M8 x 1,25 x 20 mm	2
11	2790	COVER BOLT	M10 x 1,5 x 25 mm	4
12	2791	COVER BOLT	M8 x 1,25 x 16 mm	2
13	2792	GASKET		1
14	2808	WASHER	Ø19 / Ø13 mm	1
15	2809	COVER BOLT		1

ORIGINAL PART NUMBERS,MARKS AND MODELS MENTIONED ARE ONLY FOR DESCRIPTION PURPOSES.

DX 175 TYPE

CHEEFT NUMBER	2304

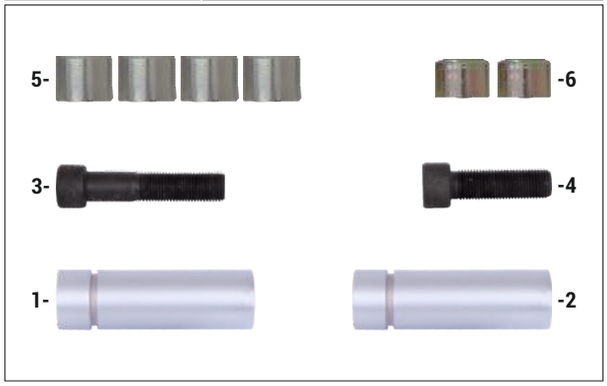

Caliper Guides Repair Kit

OEM NUMBER	

NR	CHEEFT NR	DESCRIPTIONS	DIMENSION	QTY
1	2782	GUIDE PIN	Ø28 x 96/44 mm	1
2	2783	GUIDE PIN	Ø28 x 96/64 mm	1
3	2784	BOLT	M14 x 1,5 x 70 mm	1
4	2785	BOLT	M14 x 1,5 x 50 mm	1
5	2786	BUSH	Ø32 x Ø28 x 24,8 mm	4
6	2787	STEEL CAP	Ø37 x 25 mm	2

CHEEFT NUMBER	2290

Caliper Adjustment Sleeve (Left)

OEM NUMBER	

NR	CHEEFT NR	DESCRIPTIONS	DIMENSION	QTY
1	2800	ADJUSTMENT SLEEVE (LEFT)		2

CHEEFT NUMBER	2291

Caliper Adjustment Sleeve (Right)

OEM NUMBER	

NR	CHEEFT NR	DESCRIPTIONS	DIMENSION	QTY
1	2799	ADJUSTMENT SLEEVE (RIGHT)		2

ORIGINAL PART NUMBERS,MARKS AND MODELS MENTIONED ARE ONLY FOR DESCRIPTION PURPOSES.

DX 175 TYPE

CHEEFT NUMBER	2294

Caliper Centering Gear Kit

OEM NUMBER	

NR	CHEEFT NR	DESCRIPTIONS	DIMENSION	QTY
1	2797	FORK GEAR		1
2	2810	GEAR		1

CHEEFT NUMBER	2312

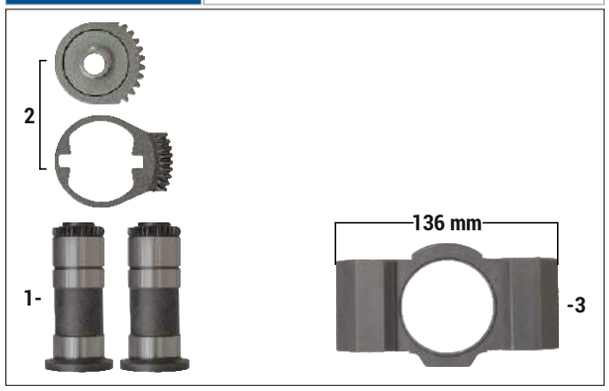

Caliper Gear & Bridge Assembly Kit (Left)

OEM NUMBER	

NR	CHEEFT NR	DESCRIPTIONS	DIMENSION	QTY
1	2290	ADJUSTMENT SLEEVE (LEFT)		1
2	2294	CENTERING GEAR KIT		1
3	2295	BRIDGE ASSEMBLY	136 mm	1

CHEEFT NUMBER	2313

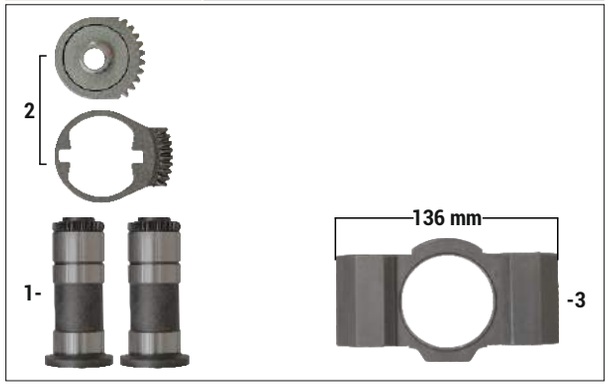

Caliper Gear & Bridge Assembly Kit (Right)

OEM NUMBER	

NR	CHEEFT NR	DESCRIPTIONS	DIMENSION	QTY
1	2291	ADJUSTMENT SLEEVE (RIGHT)		1
2	2294	CENTERING GEAR KIT		1
3	2295	BRIDGE ASSEMBLY	136 mm	1

ORIGINAL PART NUMBERS,MARKS AND MODELS MENTIONED ARE ONLY FOR DESCRIPTION PURPOSES.

DX 175 TYPE

CHEEFT NUMBER	2311

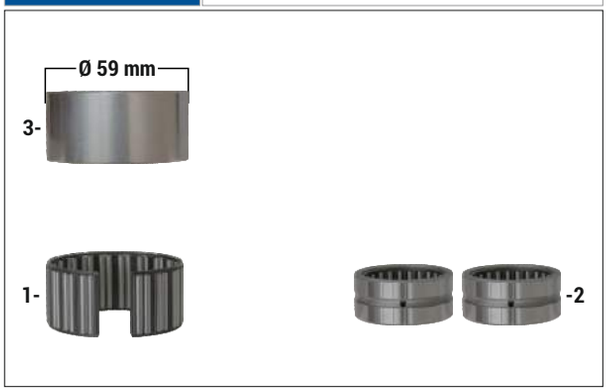

Caliper Bearing Kit

OEM NUMBER	

NR	CHEEFT NR	DESCRIPTIONS	DIMENSION	QTY
1	2305	SHAFT ROLLER BEARING		1
2	2796	CALIPER NEEDLE BEARING		2
3	2812	BEARING OUTER RACE	Ø59 mm	1

CHEEFT NUMBER	2307

Caliper Eccentric Shaft Kit

OEM NUMBER	

NR	CHEEFT NR	DESCRIPTIONS	DIMENSION	QTY
1	2796	CALIPER NEEDLE BEARING		1
2	2795	SHAFT		1

CHEEFT NUMBER	2299

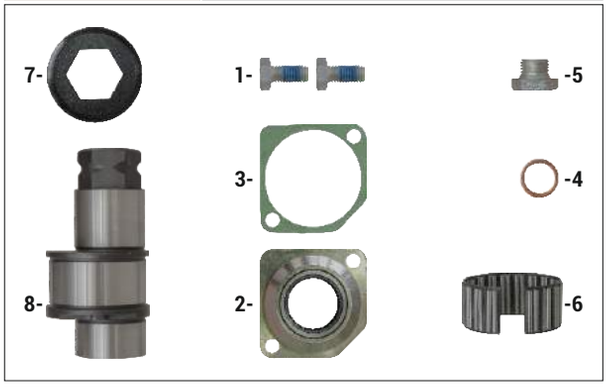

Shaft Cover Kit

OEM NUMBER	

NR	CHEEFT NR	DESCRIPTIONS	DIMENSION	QTY
1	2791	COVER BOLT	M8 x 1,25 x 16 mm	2
2	2793	CALIPER COVER		1
3	2792	GASKET		1
4	2637	WASHER	Ø19 / Ø13 mm	1
5	2686	PLUG BOLT		1
6	2305	SHAFT ROLLER BEARING		1
7	2794	SHAFT DUST COVER		1
8	2795	SHAFT		1

ORIGINAL PART NUMBERS,MARKS AND MODELS MENTIONED ARE ONLY FOR DESCRIPTION PURPOSES.

DX 175 TYPE

CHEEFT NUMBER	2306

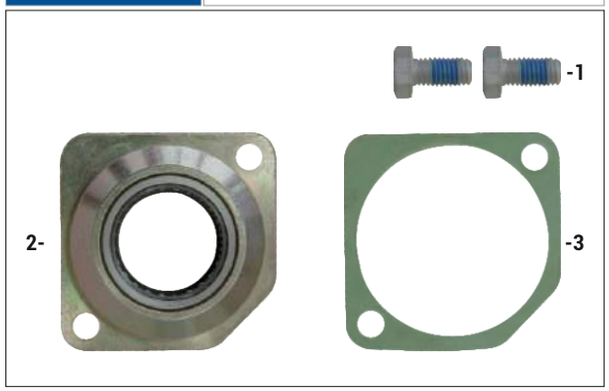

Caliper Shaft Cover Kit

OEM NUMBER	

NR	CHEEFT NR	DESCRIPTIONS	DIMENSION	QTY
1	2791	COVER BOLT	M8 x 1,25 x 16 mm	2
2	2793	CALIPER COVER		1
3	2792	GASKET		1

CHEEFT NUMBER	2301

Caliper Bearing Kit

OEM NUMBER	

NR	CHEEFT NR	DESCRIPTIONS	DIMENSION	QTY
1	2796	CALIPER NEEDLE BEARING		2

CHEEFT NUMBER	2293

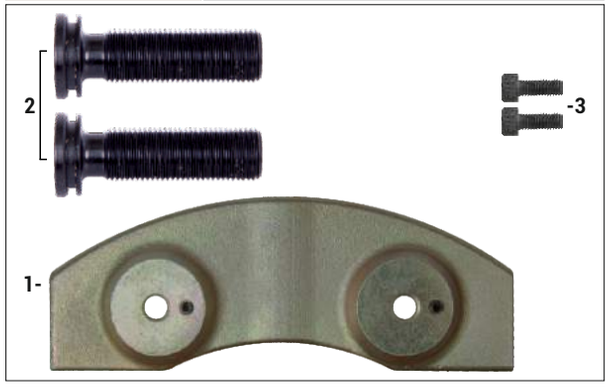

Caliper Push Plate Repair Kit (Right)

OEM NUMBER	

NR	CHEEFT NR	DESCRIPTIONS	DIMENSION	QTY
1	2308	CALIPER PUSH PLATE		1
2	2801	CALIBRATION BOLT (RIGHT)		2
3	2806	BOLT	M8 x 1,25 x 20 mm	2

ORIGINAL PART NUMBERS,MARKS AND MODELS MENTIONED ARE ONLY FOR DESCRIPTION PURPOSES.

DX 175 TYPE

CHEEFT NUMBER	2292

Caliper Push Plate Repair Kit (Left)

OEM NUMBER	

NR	CHEEFT NR	DESCRIPTIONS	DIMENSION	QTY
1	2308	CALIPER PUSH PLATE		1
2	2802	CALIBRATION BOLT (LEFT)		2
3	2806	BOLT	M8 x 1,25 x 20 mm	2

CHEEFT NUMBER	2297

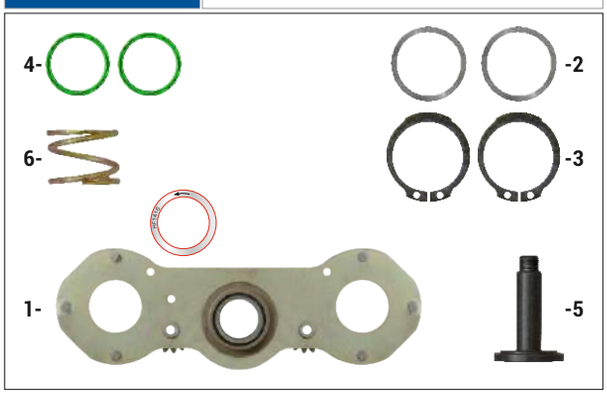

Adjusting Mechanism Repair Kit (Left)

OEM NUMBER	

NR	CHEEFT NR	DESCRIPTIONS	DIMENSION	QTY
1	2804	ADJUSTING MECHANISM (LEFT)		1
2	2798	WAVY WASHER		2
3	2803	CIRCLIP		2
4	2679	SEAL		2
5	2676	CALIBRATION BOLT		1
6	2673	SPRING		1

CHEEFT NUMBER	2298

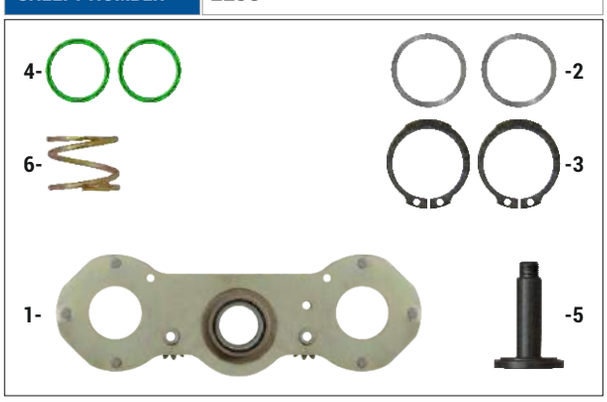

Adjusting Mechanism Repair Kit (Right)

OEM NUMBER	

NR	CHEEFT NR	DESCRIPTIONS	DIMENSION	QTY
1	2805	ADJUSTING MECHANISM (RIGHT)		1
2	2798	WAVY WASHER		2
3	2803	CIRCLIP		2
4	2679	SEAL		2
5	2676	CALIBRATION BOLT		1
6	2673	SPRING		1

ORIGINAL PART NUMBERS,MARKS AND MODELS MENTIONED ARE ONLY FOR DESCRIPTION PURPOSES.

DX 175 TYPE

CHEEFT NUMBER	2309

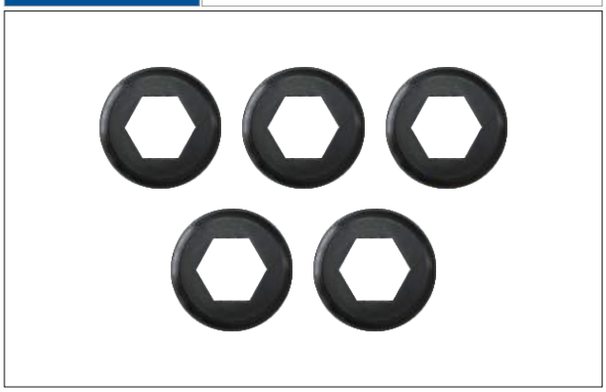

Caliper Shaft Dust Cover Kit

OEM NUMBER	

NR	CHEEFT NR	DESCRIPTIONS	DIMENSION	QTY
1	2794	SHAFT DUST COVER		5

CHEEFT NUMBER	2165

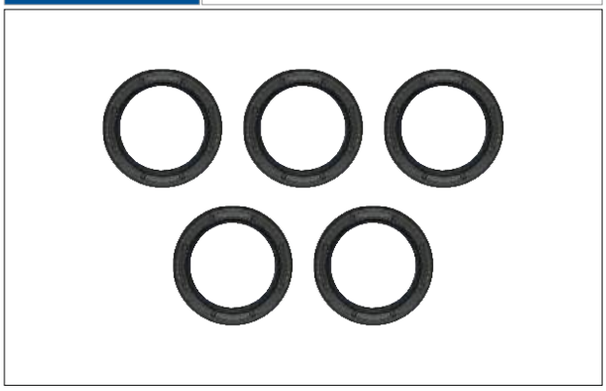

Cover Plate Seal Kit

OEM NUMBER	

NR	CHEEFT NR	DESCRIPTIONS	DIMENSION	QTY
1	2725	COVER PLATE SEAL		5

CHEEFT NUMBER	2314

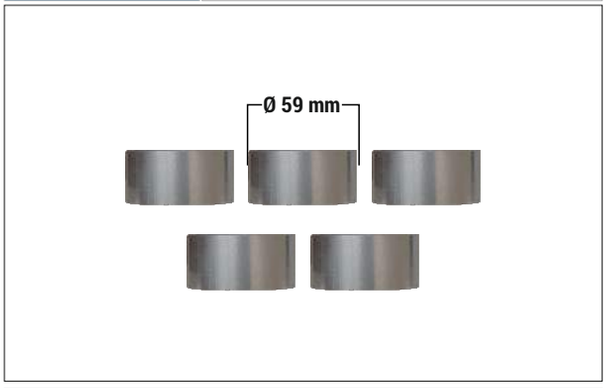

Caliper Bearing Outer Race Kit

OEM NUMBER	

NR	CHEEFT NR	DESCRIPTIONS	DIMENSION	QTY
1	2812	BEARING OUTER RACE	Ø59 mm	5

ORIGINAL PART NUMBERS,MARKS AND MODELS MENTIONED ARE ONLY FOR DESCRIPTION PURPOSES.

DX 175 TYPE

Shaft Roller Bearing	
CHEEFT NUMBER	2305
OEM NUMBER	

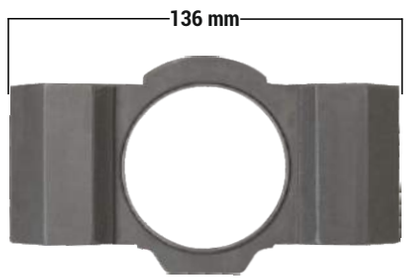

Caliper Bridge Assembly	
CHEEFT NUMBER	2295
OEM NUMBER	

Caliper Push Plate	
CHEEFT NUMBER	2308
OEM NUMBER	

Caliper Cover (Left)	
CHEEFT NUMBER	2173
OEM NUMBER	

Caliper Cover (Right)	
CHEEFT NUMBER	2174
OEM NUMBER	

ORIGINAL PART NUMBERS,MARKS AND MODELS MENTIONED ARE ONLY FOR DESCRIPTION PURPOSES.

DX 175 TYPE

Caliper Pad Retainer	
CHEEFT NUMBER	2296
OEM NUMBER	

ORIGINAL PART NUMBERS,MARKS AND MODELS MENTIONED ARE ONLY FOR DESCRIPTION PURPOSES.

DX 175 TYPE

DX 175 TYPE (LEFT)

CHEEFT NUMBER	CHS2034

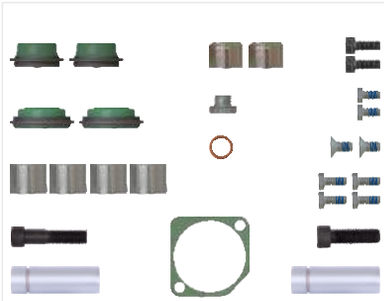

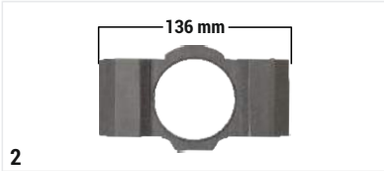

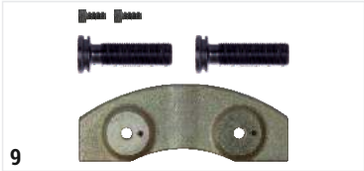

NR	CHEEFT NR	DESCRIPTIONS	QTY
1	2300	GUIDES & SEALS REPAIR KIT	1
2	2295	BRIDGE ASSEMBLY	1
3	2294	CENTERING GEAR KIT	1
4	2296	PAD RETAINER	1
5	2307	ECCENTRIC SHAFT KIT	1
6	2305	SHAFT ROLLER BEARING	1
7	2793	COVER	1
8	2290	ADJUSTMENT SLEEVE (LEFT)	1
9	2292	PUSH PLATE REPAIR KIT (LEFT)	1
10	2297	ADJUSTING MECHANISM REPAIR KIT (LEFT)	1

NR	CHEEFT NR	DESCRIPTIONS	QTY
11	2794	SHAFT GASKET	1

DX 175 TYPE (RIGHT)

CHEEFT NUMBER	CHS2035

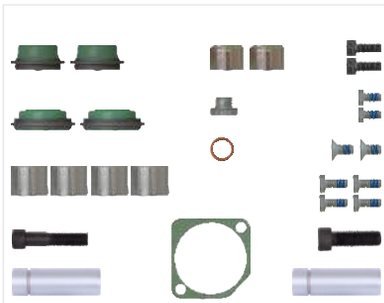

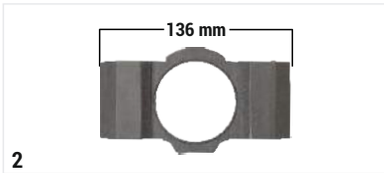

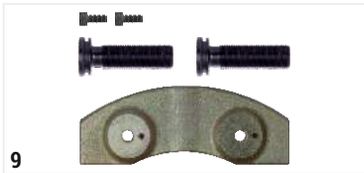

NR	CHEEFT NR	DESCRIPTIONS	QTY
1	2300	GUIDES & SEALS REPAIR KIT	1
2	2295	BRIDGE ASSEMBLY	1
3	2294	CENTERING GEAR KIT	1
4	2296	PAD RETAINER	1
5	2307	ECCENTRIC SHAFT KIT	1
6	2305	SHAFT ROLLER BEARING	1
7	2793	COVER	1
8	2291	ADJUSTMENT SLEEVE (RIGHT)	1
9	2293	PUSH PLATE REPAIR KIT (RIGHT)	1
10	2298	ADJUSTING MECHANISM REPAIR KIT (RIGHT)	1

NR	CHEEFT NR	DESCRIPTIONS	QTY
11	2794	SHAFT GASKET	1

ORIGINAL PART NUMBERS,MARKS AND MODELS MENTIONED ARE ONLY FOR DESCRIPTION PURPOSES.

COHEEFT®
AIR DISC BRAKE CALIPER REPAIR KITS

MRT

DX 195 TYPE

Always the Best...

EAC CE UDEM JAS-ANZ ISO 9001 2015

COHEEFT®

AIR DISC BRAKE CALIPER REPAIR KITS

MRT

DX 195 TYPE

Always the Best...

EAC CE UDEM JAS-ANZ ISO 9001 2015

DX 195 TYPE

CHEEFT NUMBER	2047

Caliper Seals & Bolts Repair Kit

OEM NUMBER	MCK1192 - SCN 1034001 - DF 148999 ASTRA 98133544AS - RNLT 5021 170 886 VLV AMMCK1192 - FRUEHAUF CF104388 CTRPLLR 2799674

NR	CHEEFT NR	DESCRIPTIONS	DIMENSION	QTY
1	2551	BOLT	M16 x 1,5 x 55 mm	1
2	2513	BOLT	M16 x 1,5 x 80 mm	1
3	2588	GUIDE PIN DUST EXCLUDER		2
4	2587	TAPPET DUST EXCLUDER		2
5	2543	STEEL CAP	Ø41,80 x 29 mm	2
6	2616	SEAL		2
7	2740	STEEL CAP	Ø37 x 15 mm	1

CHEEFT NUMBER	2048

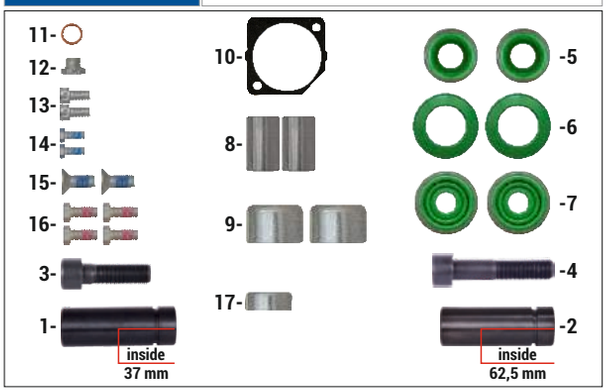

Caliper Overhaul Repair Kit

OEM NUMBER	MCK1171 - SCN AMMCK1171 - DF 1489989 RNLT 5021 170 885 - ASTR 98133542AS CTRPLLR 2799440 - FRUEHAUF CF104387

NR	CHEEFT NR	DESCRIPTIONS	DIMENSION	QTY
1	2512	GUIDE PIN	Ø32 x 97/37 mm	1
2	2519	GUIDE PIN	Ø32 x 97/62,5 mm	1
3	2551	BOLT	M16 x 1,5 x 55 mm	1
4	1513	BOLT	M16 x 1,5 x 80 mm	1
5	2588	GUIDE PIN DUST EXCLUDER		2
6	2616	SEAL		2
7	2587	TAPPET DUST EXCLUDER		2
8	2533	TEFLON BUSH	Ø36 x Ø32 x 55 mm	2
9	2543	STEEL CAP	Ø41,80 x 29 mm	2
10	2632	GASKET		1
11	2637	WASHER	Ø19 / Ø13 mm	1
12	2686	PLUG BOLT		1
13	2683	BOLT	M10 x 1,5 x 20 mm	2
14	2682	COVER BOLT	M8 x 1,25 x 20 mm	2
15	2684	COVER BOLT	M12 x 1,75 x 23 mm	2
16	2685	COVER BOLT	M12 x 1,75 x 29 mm	4
17	2740	STEEL CAP	Ø37 x 15 mm	1

Caliper Roller Bearing

CHEEFT NUMBER	2050
OEM NUMBER	

ORIGINAL PART NUMBERS,MARKS AND MODELS MENTIONED ARE ONLY FOR DESCRIPTION PURPOSES.

DX 195 TYPE

CHEEFT NUMBER	2193

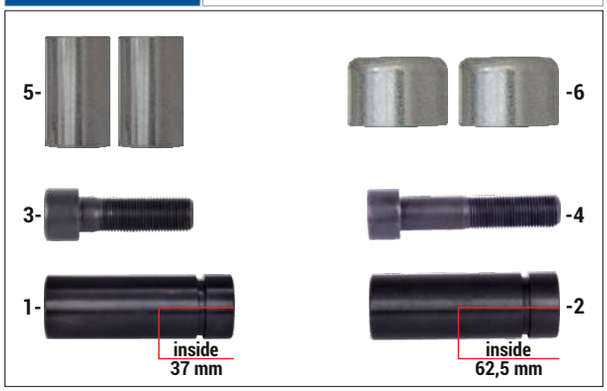

Caliper Guide & Caps Repair Kit

OEM NUMBER	

NR	CHEEFT NR	DESCRIPTIONS	DIMENSION	QTY
1	2512	GUIDE PIN	Ø32 x 97/37 mm	1
2	2519	GUIDE PIN	Ø32 x 97/62,5 mm	1
3	2551	BOLT	M16 x 1,5 x 55 mm	1
4	1513	BOLT	M16 x 1,5 x 80 mm	1
5	2533	TEFLON BUSH	Ø36 x Ø32 x 55 mm	2
6	2543	STEEL CAP	Ø41,80 x 29 mm	2

CHEEFT NUMBER	2242

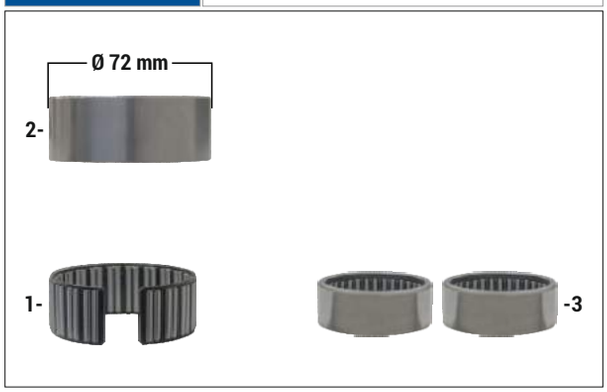

Caliper Bearing Repair Kit

OEM NUMBER	MCK1344 - ASTR 98133545AS CTRPLLR 3429202 BRDMNRNBS 193107

NR	CHEEFT NR	DESCRIPTIONS	DIMENSION	QTY
1	2050	ROLLER BEARING		1
2	2687	BEARING OUTER RACE	Ø72 / Ø68 x 28 mm	1
3	2593	SHAFT ROLLER BEARING	Ø52 / Ø46 x 20 mm	2

CHEEFT NUMBER	2049

Caliper Shaft Assembly

OEM NUMBER	

NR	CHEEFT NR	DESCRIPTIONS	DIMENSION	QTY
1	2636	SHAFT SEAL	Ø35 x 44 x 7 mm	1
2	2593	SHAFT BEARING	Ø52 / Ø46 x 20 mm	2
3	2646	SHAFT		1

ORIGINAL PART NUMBERS,MARKS AND MODELS MENTIONED ARE ONLY FOR DESCRIPTION PURPOSES.

DX 195 TYPE

CHEEFT NUMBER	2236

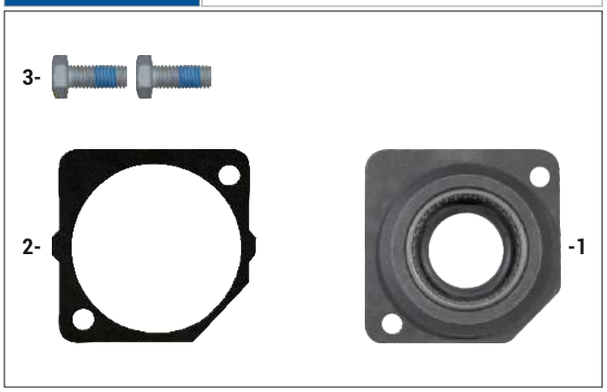

Caliper Shaft Bearing

OEM NUMBER	

NR	CHEEFT NR	DESCRIPTIONS	DIMENSION	QTY
1	2699	SHAFT BEARING		1
2	2632	GASKET		1
3	2682	COVER BOLT	M8 x 1,25 x 20 mm	2

CHEEFT NUMBER	2233

Caliper Adjustment Sleeve (Left)

OEM NUMBER	

NR	CHEEFT NR	DESCRIPTIONS	DIMENSION	QTY
1	2726	ADJUSTMENT SLEEVE (LEFT)		2

CHEEFT NUMBER	2234

Caliper Adjustment Sleeve (Right)

OEM NUMBER	

NR	CHEEFT NR	DESCRIPTIONS	DIMENSION	QTY
1	2727	ADJUSTMENT SLEEVE (RIGHT)		2

ORIGINAL PART NUMBERS,MARKS AND MODELS MENTIONED ARE ONLY FOR DESCRIPTION PURPOSES.

DX 195 TYPE

CHEEFT NUMBER	2238

Caliper Centering Gear Kit

OEM NUMBER	(3280-C-9241-D) + (3280-Z-9360-B)

NR	CHEEFT NR	DESCRIPTIONS	DIMENSION	QTY
1	2728	FORK GEAR		1
2	2729	GEAR		1

CHEEFT NUMBER	2268

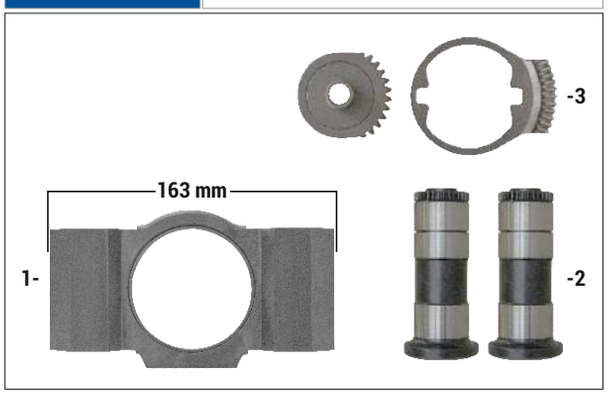

Caliper Gear & Bridge Assembly Kit (Left)

OEM NUMBER	DSB6L

NR	CHEEFT NR	DESCRIPTIONS	DIMENSION	QTY
1	2194	BRIDGE ASSEMBLY	163 mm	1
2	2233	ADJUSTMENT SLEEVE (LEFT)		1
3	2238	CENTERING GEAR KIT		1

CHEEFT NUMBER	2269

Caliper Gear & Bridge Assembly Kit (Right)

OEM NUMBER	DSB6R

NR	CHEEFT NR	DESCRIPTIONS	DIMENSION	QTY
1	2194	BRIDGE ASSEMBLY	163 mm	1
2	2234	ADJUSTMENT SLEEVE (RIGHT)		1
3	2238	CENTERING GEAR KIT		1

ORIGINAL PART NUMBERS,MARKS AND MODELS MENTIONED ARE ONLY FOR DESCRIPTION PURPOSES.

DX 195 TYPE

CHEEFT NUMBER	2277

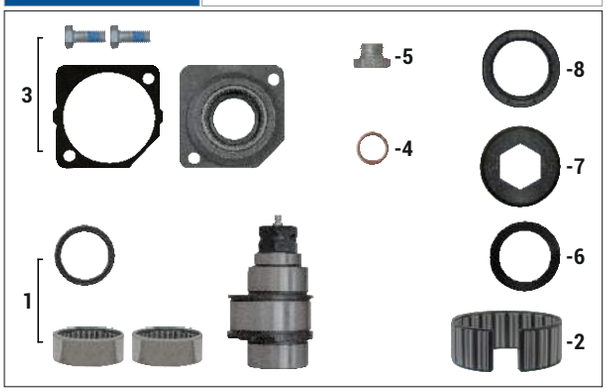

Shaft Repair Kit

OEM NUMBER	ASTR - 98133541AS - IVC 2995922 - MCK1294 RNLT 5021 202 850 - CTRPLLR 2799441 BRDMNRNBS 193100- DF 1689883

NR	CHEEFT NR	DESCRIPTIONS	DIMENSION	QTY
1	2049	CALIPER SHAFT ASSEMBLY		1
2	2050	CALIPER ROLLER BEARING		1
3	2236	CALIPER SHAFT BEARING		1
4	2637	WASHER	Ø19 / Ø13 mm	1
5	2686	PLUG BOLT		1
6	2715	WASHER		1
7	2724	SHAFT DUST COVER		1
8	2725	COVER PLATE SEAL		1

CHEEFT NUMBER	2203

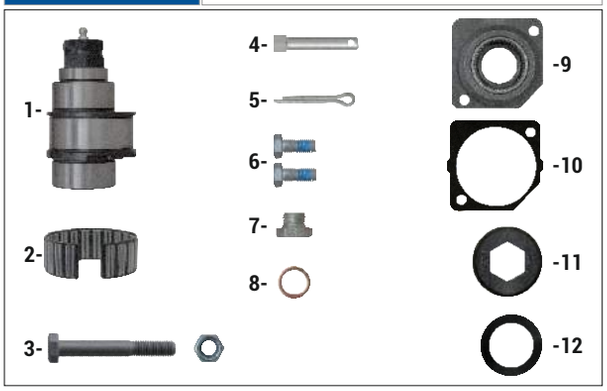

Shaft Repair Kit

OEM NUMBER	MCK1294

NR	CHEEFT NR	DESCRIPTIONS	DIMENSION	QTY
1	2646	SHAFT		1
2	2050	ROLLER BEARING		1
3	4520	BOLT WITH NUT	M8 x 60 mm	1
4	2860	PIN		1
5	2861	PIN LOCKER		1
6	2682	COVER BOLT	M8 x 1,25 x 20 mm	2
7	2686	PLUG BOLT		1
8	2637	WASHER	Ø19 / Ø13 mm	1
9	2699	SHAFT BEARING		1
10	2632	GASKET		1
11	2724	SHAFT DUST COVER		1
12	2715	WASHER		1

CHEEFT NUMBER	2053

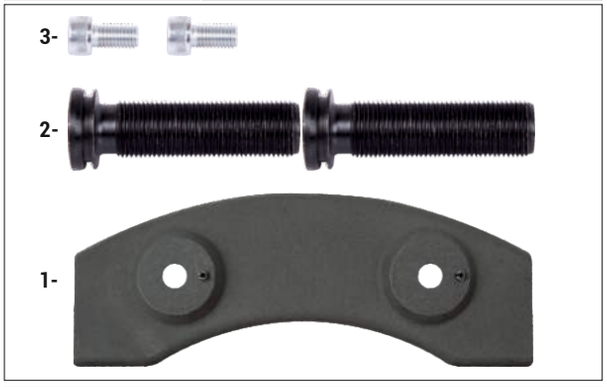

Caliper Push Plate Repair Kit (Right)

OEM NUMBER	

NR	CHEEFT NR	DESCRIPTIONS	DIMENSION	QTY
1	2205	PUSH PLATE		1
2	2228	CALIBRATION BOLT (RIGHT)		2
3	2683	BOLT	M10 x 1,5 x 20 mm	2

ORIGINAL PART NUMBERS,MARKS AND MODELS MENTIONED ARE ONLY FOR DESCRIPTION PURPOSES.

DX 195 TYPE

CHEEFT NUMBER	2054

Caliper Push Plate Repair Kit (Left)

OEM NUMBER	

NR	CHEEFT NR	DESCRIPTIONS	DIMENSION	QTY
1	2205	PUSH PLATE		1
2	2229	CALIBRATION BOLT (LEFT)		2
3	2683	BOLT	M10 x 1,5 x 20 mm	2

CHEEFT NUMBER	2270

Caliper Assembly Kit (Left)

OEM NUMBER	DF 876052 - MCK1292 VLV AMMCK1292

NR	CHEEFT NR	DESCRIPTIONS	DIMENSION	QTY
1	2194	BRIDGE ASSEMBLY	163 mm	1
2	2233	ADJUSTMENT SLEEVE (LEFT)		1
3	2054	PUSH PLATE REPAIR KIT (LEFT)		1
4	2587	TAPPET DUST EXCLUDER		2
5	2616	SEAL		2
6	2740	STEEL CAP	Ø37 x 15 mm	1

CHEEFT NUMBER	2271

Caliper Assembly Kit (Right)

OEM NUMBER	DF 876053 - MCK1293 - VLV AMMCK1293 CTRPLLR 2799439

NR	CHEEFT NR	DESCRIPTIONS	DIMENSION	QTY
1	2194	BRIDGE ASSEMBLY	163 mm	1
2	2234	ADJUSTMENT SLEEVE (RIGHT)		1
3	2053	PUSH PLATE REPAIR KIT (RIGHT)		1
4	2587	TAPPET DUST EXCLUDER		2
5	2616	SEAL		2
6	2740	STEEL CAP	Ø37 x 15 mm	1

ORIGINAL PART NUMBERS,MARKS AND MODELS MENTIONED ARE ONLY FOR DESCRIPTION PURPOSES.

DX 195 TYPE

CHEEFT NUMBER	2241

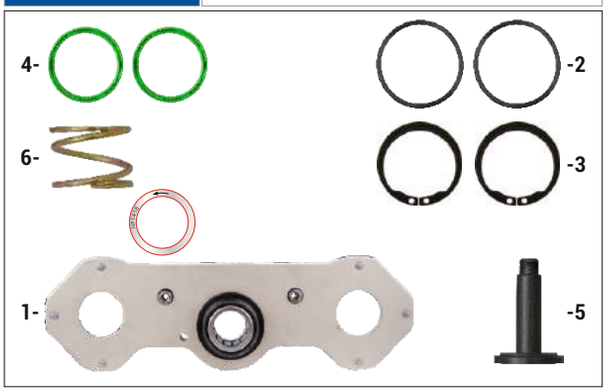

Caliper Adjusting Mechanism Repair Kit (Left)

OEM NUMBER	DSB5L - FRUEHAUF CF104620

NR	CHEEFT NR	DESCRIPTIONS	DIMENSION	QTY
1	2680	ADJUSTING MECHANISM (LEFT)		1
2	2677	WAVY WASHER		2
3	2678	CIRCLIP		2
4	2679	SEAL		2
5	2676	CALIBRATION BOLT		1
6	2673	SPRING		1

CHEEFT NUMBER	2240

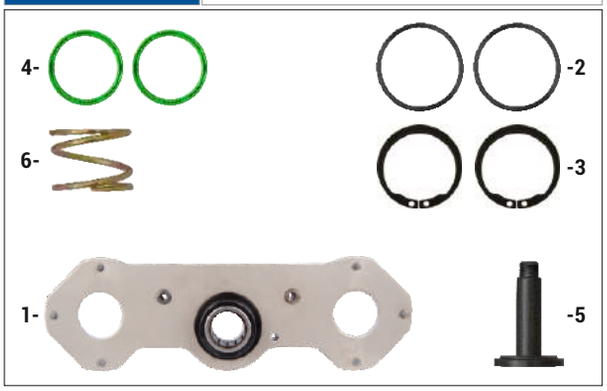

Caliper Adjusting Mechanism Repair Kit (Right)

OEM NUMBER	DSB5R - FRUEHAUF CF104619

NR	CHEEFT NR	DESCRIPTIONS	DIMENSION	QTY
1	2675	ADJUSTING MECHANISM (RIGHT)		1
2	2677	WAVY WASHER		2
3	2678	CIRCLIP		2
4	2679	SEAL		2
5	2676	CALIBRATION BOLT		1
6	2673	SPRING		1

CHEEFT NUMBER	2164

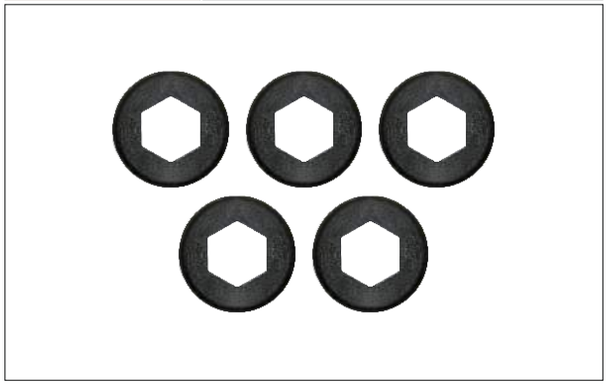

Shaft Dust Cover Kit

OEM NUMBER	

NR	CHEEFT NR	DESCRIPTIONS	DIMENSION	QTY
1	2724	SHAFT DUST COVER		5

ORIGINAL PART NUMBERS,MARKS AND MODELS MENTIONED ARE ONLY FOR DESCRIPTION PURPOSES.

DX 195 TYPE

CHEEFT NUMBER	2275

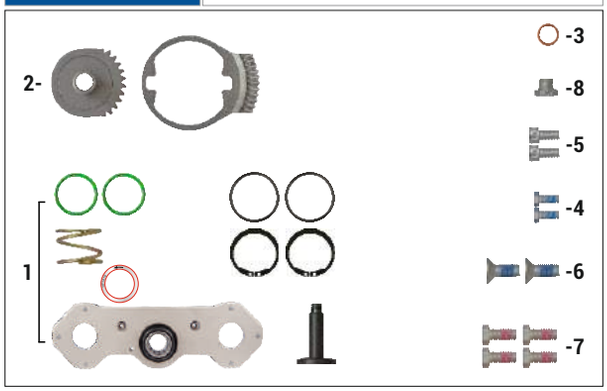

Caliper Adjusting Mechanism Gear Kit (Left)

OEM NUMBER	MCK1290 - VLV AMMCK1290

NR	CHEEFT NR	DESCRIPTIONS	DIMENSION	QTY
1	2241	MECHANISM REPAIR KIT (LEFT)		1
2	2238	ADJUSTING CENTERING GEAR KIT		1
3	2637	WASHER	Ø19 / Ø13 mm	1
4	2682	COVER BOLT	M8 x 1,25 x 20 mm	2
5	2683	BOLT	M10 x 1,5 x 20 mm	2
6	2684	COVER BOLT	M12 x 1,75 x 23 mm	2
7	2685	COVER BOLT	M12 x 1,75 x 29 mm	4
8	2686	PLUG BOLT		1

CHEEFT NUMBER	2276

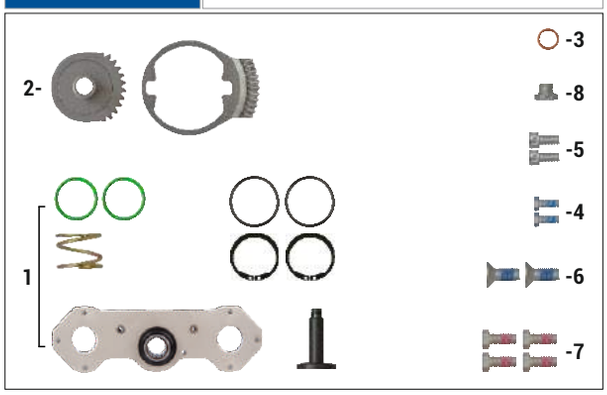

Caliper Adjusting Mechanism Gear Kit (Right)

OEM NUMBER	DF 876051 - MCK1291 - VLV AMMCK1291 CTRPLLR 2799438

NR	CHEEFT NR	DESCRIPTIONS	DIMENSION	QTY
1	2240	MECHANISM REPAIR KIT (RIGHT)		1
2	2238	ADJUSTING CENTERING GEAR KIT		1
3	2637	WASHER	Ø19 / Ø13 mm	1
4	2682	COVER BOLT	M8 x 1,25 x 20 mm	2
5	2683	BOLT	M10 x 1,5 x 20 mm	2
6	2684	COVER BOLT	M12 x 1,75 x 23 mm	2
7	2685	COVER BOLT	M12 x 1,75 x 29 mm	4
8	2686	PLUG BOLT		1

CHEEFT NUMBER	2165

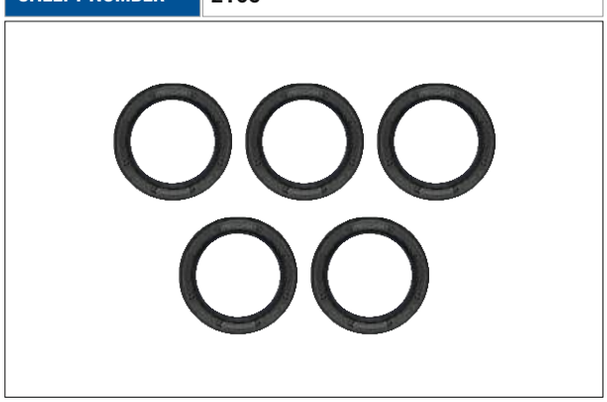

Cover Plate Seal Kit

OEM NUMBER	

NR	CHEEFT NR	DESCRIPTIONS	DIMENSION	QTY
1	2725	COVER PLATE SEAL		5

ORIGINAL PART NUMBERS,MARKS AND MODELS MENTIONED ARE ONLY FOR DESCRIPTION PURPOSES.

DX 195 TYPE

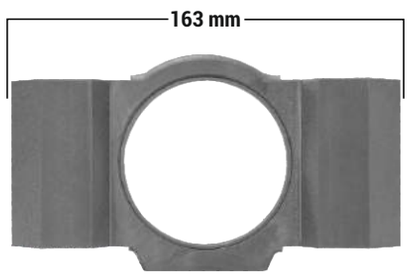

Caliper Bridge Assembly

CHEEFT NUMBER	2194
OEM NUMBER	

Caliper Push Plate

CHEEFT NUMBER	2205
OEM NUMBER	

Caliper Pad Retainer

CHEEFT NUMBER	2237
OEM NUMBER	

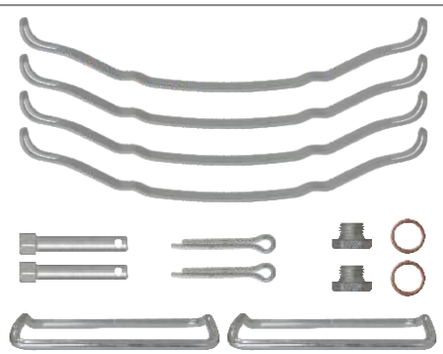

Caliper Pad Retainer Repair Kit

CHEEFT NUMBER	2248
OEM NUMBER	MBA100

Caliper Calibration Bolt (Right)

CHEEFT NUMBER	2228
OEM NUMBER	

ORIGINAL PART NUMBERS,MARKS AND MODELS MENTIONED ARE ONLY FOR DESCRIPTION PURPOSES.

DX 195 TYPE

Caliper Calibration Bolt (Left)

CHEEFT NUMBER	2229
OEM NUMBER	

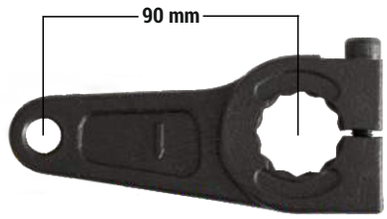

Caliper Shaft Lever (90 mm)

CHEEFT NUMBER	2046
OEM NUMBER	MCK1161 - MN N2509990223 - STRMCK1161 DF 1675766 - VLV AMMCK1161 ASTR 98133540AS - FRUEHAUF CF103650 RVI 5021139151 - 5021170883

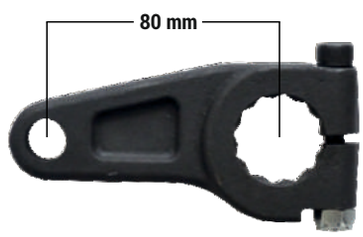

Caliper Shaft Lever

CHEEFT NUMBER	2062
OEM NUMBER	MCK1160 - MN N2509990221-STRMCK1160 DF 1675768 - VLV AMMCK1160 RNLT 5021 139 150-5021 170 882

Caliper Cover (Left)

CHEEFT NUMBER	2175
OEM NUMBER	

Caliper Cover (Right)

CHEEFT NUMBER	2176
OEM NUMBER	

ORIGINAL PART NUMBERS,MARKS AND MODELS MENTIONED ARE ONLY FOR DESCRIPTION PURPOSES.

DX 195 TYPE

CHEEFT NUMBER	2059

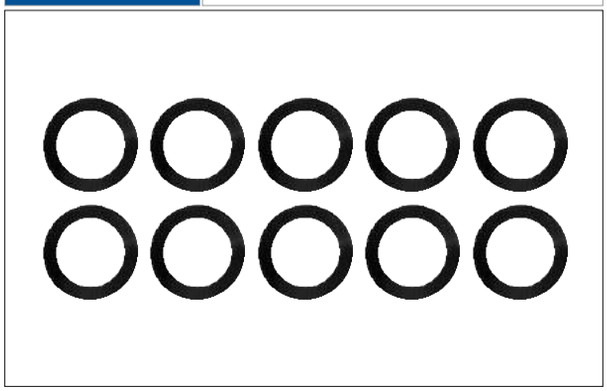

Caliper Washer Kit

OEM NUMBER	

NR	CHEEFT NR	DESCRIPTIONS	DIMENSION	QTY
1	2715	WASHER		10

CHEEFT NUMBER	2243

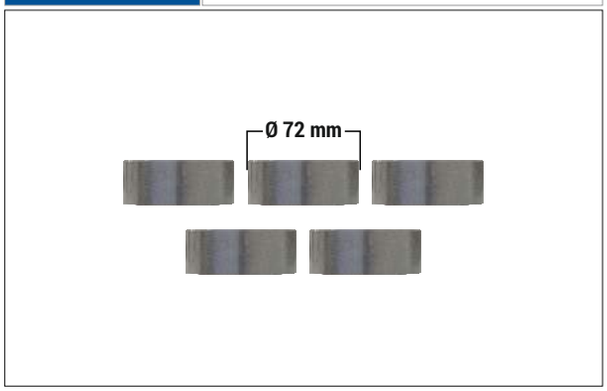

Caliper Bearing Outer Race Kit

OEM NUMBER	

NR	CHEEFT NR	DESCRIPTIONS	DIMENSION	QTY
1	2687	BEARING OUTER RACE	Ø72 / Ø68 x 28 mm	5

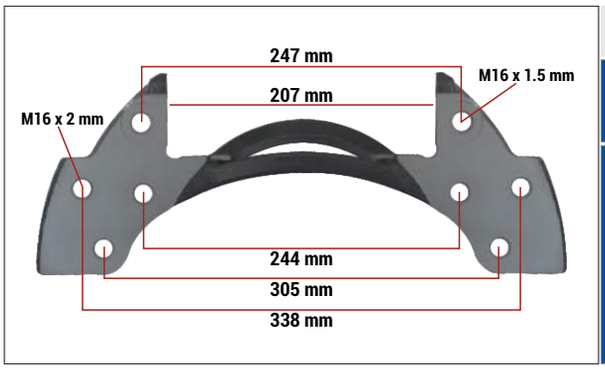

DX 195 Carrier (Right-Left)

CHEEFT NUMBER	2322
OEM NUMBER	MRT MCK1185

ORIGINAL PART NUMBERS,MARKS AND MODELS MENTIONED ARE ONLY FOR DESCRIPTION PURPOSES.

DX 195 TYPE

DX 195 REPAIR SET (RIGHT)

CHEEFT NUMBER	CHS2015

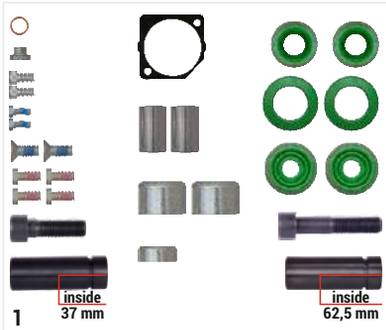

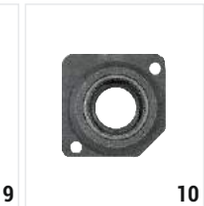

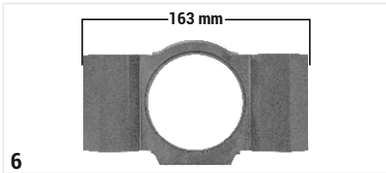

NR	CHEEFT NR	DESCRIPTIONS	QTY
1	2048	OVERHAUL REPAIR KIT	1
2	2049	SHAFT ASSEMBLY	1
3	2050	ROLLER BEARING	1
4	2053	PUSH PLATE REPAIR KIT (RIGHT)	1
5	2062	SHAFT LEVER	1
6	2194	BRIDGE ASSEMBLY 163 mm	1
7	2724	SHAFT DUST COVER	1
8	2725	COVER PLATE SEAL	1
9	2234	ADJUSTMENT SLEEVE (RIGHT)	1
10	2699	SHAFT BEARING	1

NR	CHEEFT NR	DESCRIPTIONS	QTY
11	2238	CENTERING GEAR KIT	1
12	2240	ADJUSTING MECHANISM REPAIR KIT (RIGHT)	1
13	2715	WASHER	1

DX 195 REPAIR SET (LEFT)

CHEEFT NUMBER	CHS2016

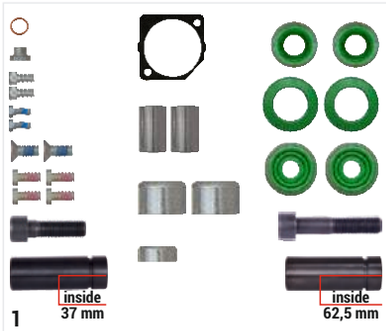

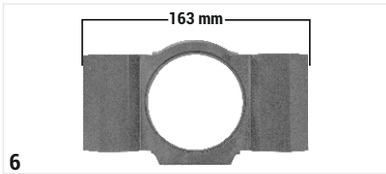

NR	CHEEFT NR	DESCRIPTIONS	QTY
1	2048	OVERHAUL REPAIR KIT	1
2	2049	SHAFT ASSEMBLY	1
3	2050	ROLLER BEARING	1
4	2054	PUSH PLATE REPAIR KIT (LEFT)	1
5	2062	SHAFT LEVER	1
6	2194	BRIDGE ASSEMBLY 163 mm	1
7	2724	SHAFT DUST COVER	1
8	2725	COVER PLATE SEAL	1
9	2233	ADJUSTMENT SLEEVE (LEFT)	1
10	2699	SHAFT BEARING	1

NR	CHEEFT NR	DESCRIPTIONS	QTY
11	2238	CENTERING GEAR KIT	1
12	2241	ADJUSTING MECHANISM REPAIR KIT (LEFT)	1
13	2715	WASHER	1

ORIGINAL PART NUMBERS,MARKS AND MODELS MENTIONED ARE ONLY FOR DESCRIPTION PURPOSES.

COHEEFT®
AIR DISC BRAKE CALIPER REPAIR KITS

MRT

DX 225 TYPE

Always the Best...

EAC CE UDEM JAS-ANZ ISO 9001 2015

COHEEFT®

AIR DISC BRAKE CALIPER REPAIR KITS

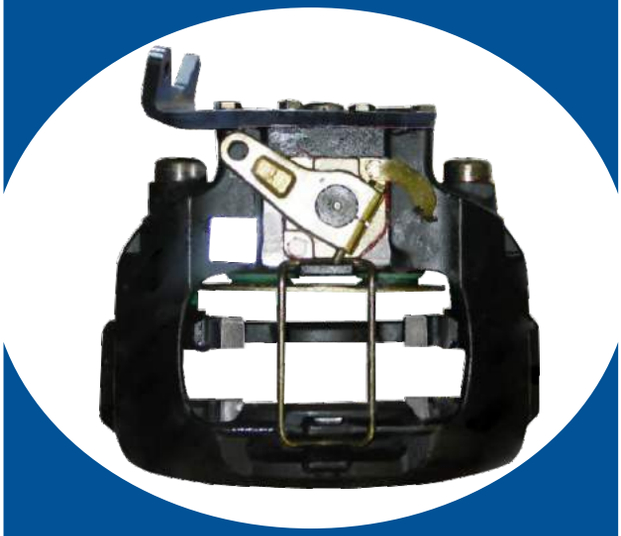

MRT

DX 225 TYPE

Always the Best...

EAC CE UDEM JAS-ANZ ISO 9001 2015

DX 225 TYPE

CHEEFT NUMBER	2058

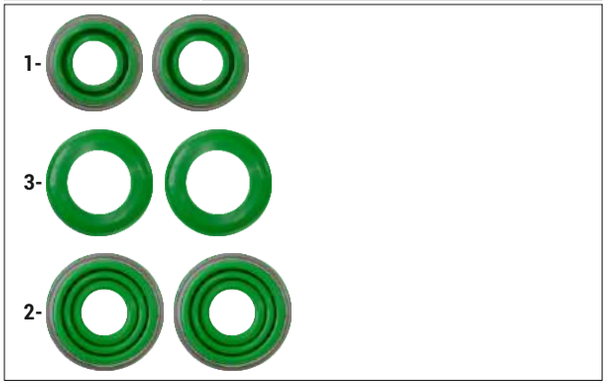

Caliper Seals Repair Kit

OEM NUMBER	

NR	CHEEFT NR	DESCRIPTIONS	DIMENSION	QTY
1	2760	GUIDE PIN DUST EXCLUDER		2
2	2761	BOLT DUST EXCLUDER		2
3	2762	SEAL		2

CHEEFT NUMBER	2052

Caliper Seals & Bolts Repair Kit

OEM NUMBER	MCK1193 - BREDAMENARINIBUS 193102

NR	CHEEFT NR	DESCRIPTIONS	DIMENSION	QTY
1	2601	BOLT	M18 x 2,5 x 55,8 mm	1
2	2602	BOLT	M18 x 2,5 x 90 mm	1
3	2760	GUIDE PIN DUST EXCLUDER		2
4	2761	BOLT DUST EXCLUDER		2
5	2762	SEAL		2
6	2604	STEEL CAP	Ø41,80 x 31 mm	2
7	2740	STEEL CAP	Ø37 x 15 mm	1

CHEEFT NUMBER	2148

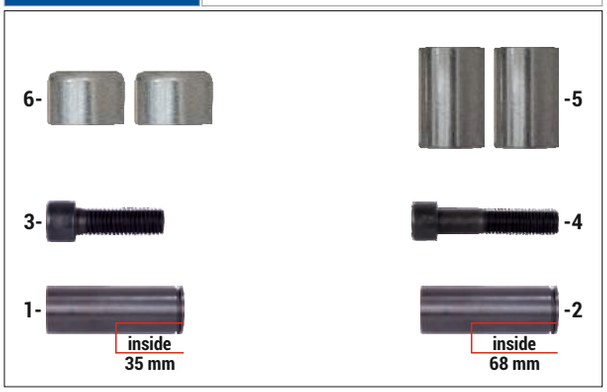

Caliper Guide & Caps Repair Kit

OEM NUMBER	

NR	CHEEFT NR	DESCRIPTIONS	DIMENSION	QTY
1	2716	GUIDE PIN	Ø34,70 x 98/35 mm	1
2	2717	GUIDE PIN	Ø35 x 98/68 mm	1
3	2601	BOLT	M18 x 2,5 x 55,8 mm	1
4	2602	BOLT	M18 x 2,5 x 90 mm	1
5	2603	PLAIN BUSH	Ø39,3 x Ø35 x 50 mm	2
6	2604	STEEL CAP	Ø41,80 x 31 mm	2

ORIGINAL PART NUMBERS,MARKS AND MODELS MENTIONED ARE ONLY FOR DESCRIPTION PURPOSES.

DX 225 TYPE

CHEEFT NUMBER	2060

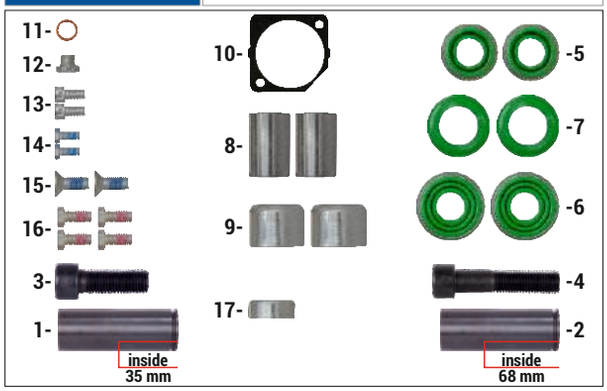

Caliper Overhaul Repair Kit

OEM NUMBER	MCK1172 - BRDMNRNBS 193101

NR	CHEEFT NR	DESCRIPTIONS	DIMENSION	QTY
1	2716	GUIDE PIN	Ø34,70 x 98/35 mm	1
2	2717	GUIDE PIN	Ø35 x 98/68 mm	1
3	2601	BOLT	M18 x 2,5 x 55,8 mm	1
4	2602	BOLT	M18 x 2,5 x 90 mm	1
5	2760	GUIDE PIN DUST EXCLUDER		2
6	2761	BOLT DUST EXCLUDER		2
7	2762	SEAL		2
8	2603	PLAIN BUSH	Ø39,3 x Ø35 x 50 mm	2
9	2604	STEEL CAP	Ø41,80 x 31 mm	2
10	2632	GASKET		1
11	2637	WASHER	Ø19 / Ø13 mm	1
12	2686	PLUG BOLT		1
13	2683	BOLT	M10 x 1,5 x 20 mm	2
14	2682	COVER BOLT	M8 x 1,25 x 20 mm	2
15	2684	COVER BOLT	M12 x 1,75 x 23 mm	2
16	2685	COVER BOLT	M12 x 1,75 x 29 mm	4
17	2740	STEEL CAP	Ø37 x 15 mm	1

CHEEFT NUMBER	2040

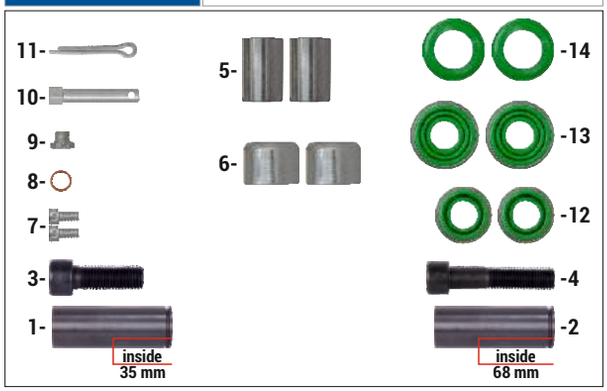

Caliper Overhaul Repair Kit

OEM NUMBER	MCK1172

NR	CHEEFT NR	DESCRIPTIONS	DIMENSION	QTY
1	2716	GUIDE PIN	Ø34,70 x 98/35 mm	1
2	2717	GUIDE PIN	Ø35 x 98/68 mm	1
3	2602	BOLT	M18 x 2,5 x 90 mm	1
4	2601	BOLT	M18 x 2,5 x 55,8 mm	1
5	2603	PLAIN BUSH	Ø39,3 x Ø35 x 50 mm	2
6	2604	STEEL CAP	Ø41,80 x 31 mm	2
7	2683	BOLT	M10 x 1,5 x 20 mm	2
8	2637	WASHER	Ø19 / Ø13 mm	1
9	2686	PLUG BOLT		1
10	2860	PIN		1
11	2861	PIN LOCKER		1
12	2760	GUIDE PIN DUST EXCLUDER		2
13	2761	BOLT DUST EXCLUDER		2
14	2762	SEAL		2

Caliper Roller Bearing

CHEEFT NUMBER	2050
OEM NUMBER	

ORIGINAL PART NUMBERS,MARKS AND MODELS MENTIONED ARE ONLY FOR DESCRIPTION PURPOSES.

DX 225 TYPE

CHEEFT NUMBER	2166

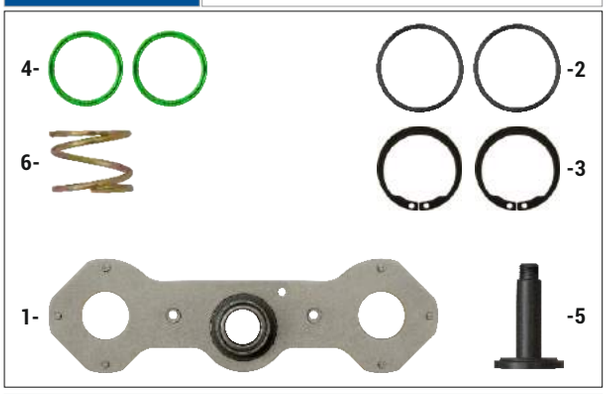

Caliper Adjusting Mechanism Repair Kit (Right)

OEM NUMBER	

NR	CHEEFT NR	DESCRIPTIONS	DIMENSION	QTY
1	2713	ADJUSTING MECHANISM (RIGHT)		1
2	2677	WAVY WASHER		2
3	2678	CIRCLIP		2
4	2679	SEAL		2
5	2676	CALIBRATION BOLT		1
6	2673	SPRING		1

CHEEFT NUMBER	2167

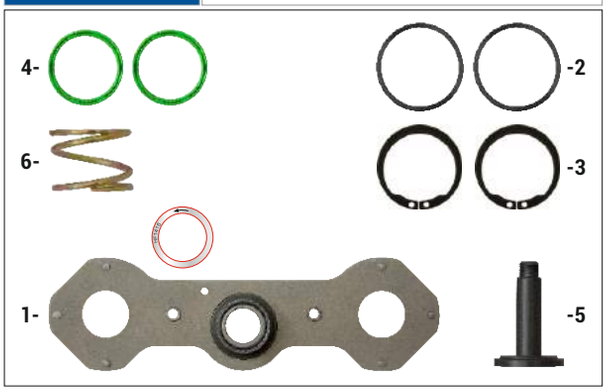

Caliper Adjusting Mechanism Repair Kit (Left)

OEM NUMBER	

NR	CHEEFT NR	DESCRIPTIONS	DIMENSION	QTY
1	2714	ADJUSTING MECHANISM (LEFT)		1
2	2677	WAVY WASHER		2
3	2678	CIRCLIP		2
4	2679	SEAL		2
5	2676	CALIBRATION BOLT		1
6	2673	SPRING		1

CHEEFT NUMBER	2282

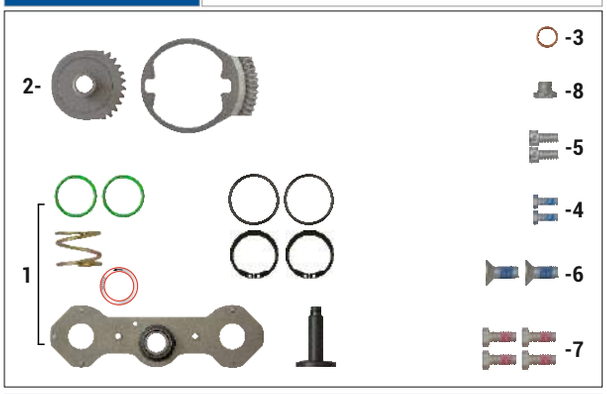

Caliper Adjusting Mechanism Gear Kit (Left)

OEM NUMBER	

NR	CHEEFT NR	DESCRIPTIONS	DIMENSION	QTY
1	2167	ADJUSTING MECHANISM REPAIR KIT (LEFT)		1
2	2238	CALIPER CENTERING GEAR KIT		1
3	2637	WASHER	Ø19 / Ø13 mm	1
4	2682	COVER BOLT	M8 x 1,25 x 20 mm	2
5	2683	BOLT	M10 x 1,5 x 20 mm	2
6	2684	COVER BOLT	M12 x 1,75 x 23 mm	2
7	2685	COVER BOLT	M12 x 1,75 x 29 mm	4
8	2686	PLUG BOLT		1

ORIGINAL PART NUMBERS,MARKS AND MODELS MENTIONED ARE ONLY FOR DESCRIPTION PURPOSES.

DX 225 TYPE

CHEEFT NUMBER	2283

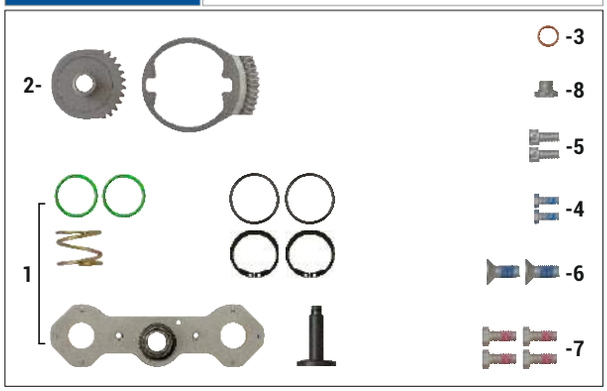

Caliper Adjusting Mechanism Gear Kit (Right)

OEM NUMBER	

NR	CHEEFT NR	DESCRIPTIONS	DIMENSION	QTY
1	2166	ADJUSTING MECHANISM REPAIR KIT (RIGHT)		1
2	2238	CALIPER CENTERING GEAR KIT		1
3	2637	WASHER	Ø19 / Ø13 mm	1
4	2682	COVER BOLT	M8 x 1,25 x 20 mm	2
5	2683	BOLT	M10 x 1,5 x 20 mm	2
6	2684	COVER BOLT	M12 x 1,75 x 23 mm	2
7	2685	COVER BOLT	M12 x 1,75 x 29 mm	4
8	2686	PLUG BOLT		1

CHEEFT NUMBER	2041

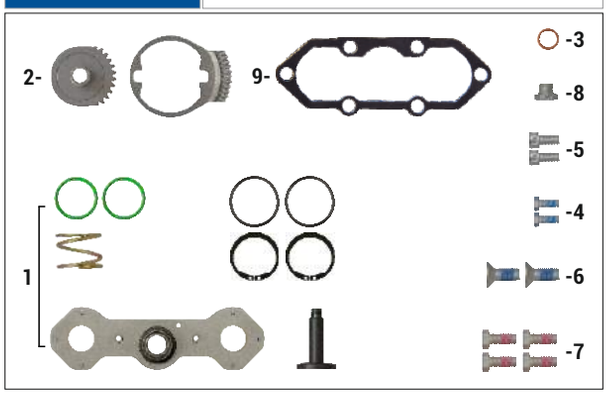

Caliper Mechanism Repair Kit (Right)

OEM NUMBER	MRT MCK1337

NR	CHEEFT NR	DESCRIPTIONS	DIMENSION	QTY
1	2166	ADJUSTING MECHANISM REPAIR KIT (RIGHT)		1
2	2238	CALIPER CENTERING GEAR KIT		1
3	2637	WASHER	Ø19 / Ø13 mm	1
4	2686	PLUG BOLT		1
5	2683	BOLT	M10 x 1,5 x 20 mm	2
6	2682	COVER BOLT	M8 x 1,25 x 20 mm	2
7	2684	COVER BOLT	M12 x 1,75 x 23 mm	2
8	2685	COVER BOLT	M12 x 1,75 x 29 mm	6
9	2170	CALIPER COVER GASKET		1

CHEEFT NUMBER	2042

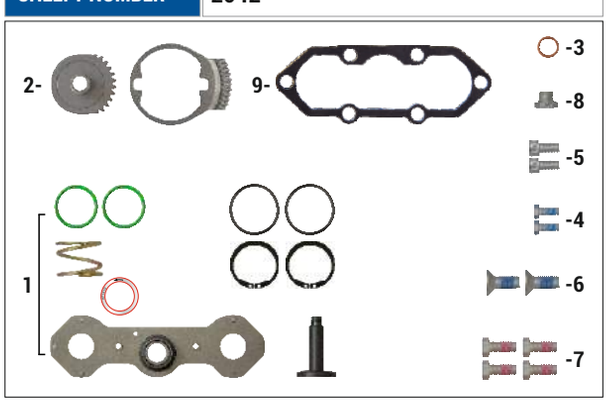

Caliper Mechanism Repair Kit (Left)

OEM NUMBER	MRT MCK1336

NR	CHEEFT NR	DESCRIPTIONS	DIMENSION	QTY
1	2167	ADJUSTING MECHANISM REPAIR KIT (LEFT)		1
2	2238	CALIPER CENTERING GEAR KIT		1
3	2637	WASHER	Ø19 / Ø13 mm	1
4	2686	PLUG BOLT		1
5	2683	BOLT	M10 x 1,5 x 20 mm	2
6	2682	COVER BOLT	M8 x 1,25 x 20 mm	2
7	2684	COVER BOLT	M12 x 1,75 x 23 mm	2
8	2685	COVER BOLT	M12 x 1,75 x 29 mm	6
9	2170	CALIPER COVER GASKET		1

ORIGINAL PART NUMBERS,MARKS AND MODELS MENTIONED ARE ONLY FOR DESCRIPTION PURPOSES.

DX 225 TYPE

CHEEFT NUMBER	2238

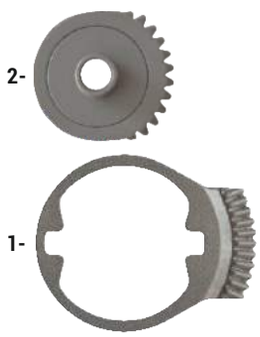

Caliper Centering Gear Kit

OEM NUMBER	(3280-C-9241-D) + (3280-Z-9360-B)

NR	CHEEFT NR	DESCRIPTIONS	DIMENSION	QTY
1	2728	FORK GEAR		1
2	2729	GEAR		1

CHEEFT NUMBER	2242

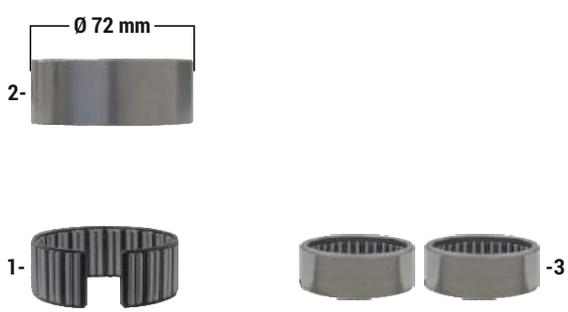

Caliper Bearing Repair Kit

OEM NUMBER	MCK1344 - ASTR 98133545AS CTRPLLR 3429202 BRDMNRNBS 193107

NR	CHEEFT NR	DESCRIPTIONS	DIMENSION	QTY
1	2050	ROLLER BEARING		1
2	2687	BEARING OUTER RACE	Ø72 / Ø68 x 28 mm	1
3	2593	SHAFT ROLLER BEARING	Ø52 / Ø46 x 20 mm	2

CHEEFT NUMBER	2243

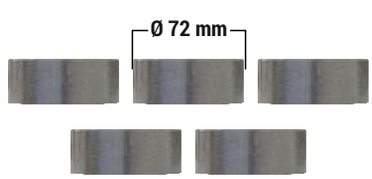

Caliper Bearing Outer Race Kit

OEM NUMBER	

NR	CHEEFT NR	DESCRIPTIONS	DIMENSION	QTY
1	2687	BEARING OUTER RACE	Ø72 / Ø68 x 28 mm	5

ORIGINAL PART NUMBERS,MARKS AND MODELS MENTIONED ARE ONLY FOR DESCRIPTION PURPOSES.

DX 225 TYPE

CHEEFT NUMBER	2049

Caliper Shaft Assembly

OEM NUMBER	

NR	CHEEFT NR	DESCRIPTIONS	DIMENSION	QTY
1	2636	SHAFT SEAL	Ø35 x 44 x 7 mm	1
2	2593	SHAFT BEARING	Ø52 / Ø46 x 20 mm	2
3	2646	SHAFT		1

CHEEFT NUMBER	2236

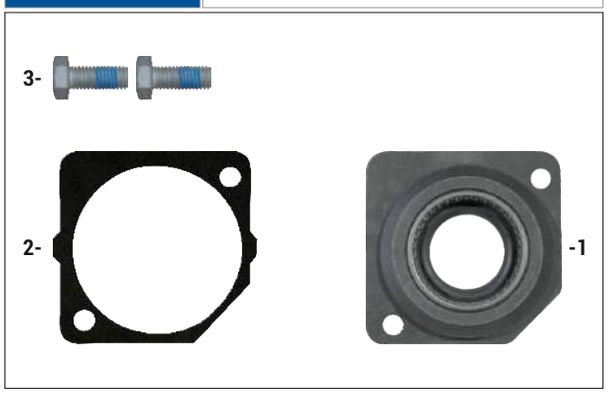

Caliper Shaft Bearing

OEM NUMBER	

NR	CHEEFT NR	DESCRIPTIONS	DIMENSION	QTY
1	2699	SHAFT BEARING		1
2	2632	GASKET		1
3	2682	COVER BOLT	M8 x 1,25 x 20 mm	2

CHEEFT NUMBER	2277

Shaft Repair Kit

OEM NUMBER	ASTR - 98133541AS - IVC 2995922 - MCK1294 RNLT 5021 202 850 - CTRPLLR 2799441 BRDMNRNBS 193100- DF 1689883

NR	CHEEFT NR	DESCRIPTIONS	DIMENSION	QTY
1	2049	CALIPER SHAFT ASSEMBLY		1
2	2050	CALIPER ROLLER BEARING		1
3	2236	CALIPER SHAFT BEARING		1
4	2637	WASHER	Ø19 / Ø13 mm	1
5	2686	PLUG BOLT		1
6	2715	WASHER		1
7	2724	SHAFT DUST COVER		1
8	2725	COVER PLATE SEAL		1

ORIGINAL PART NUMBERS,MARKS AND MODELS MENTIONED ARE ONLY FOR DESCRIPTION PURPOSES.

DX 225 TYPE

CHEEFT NUMBER	2203

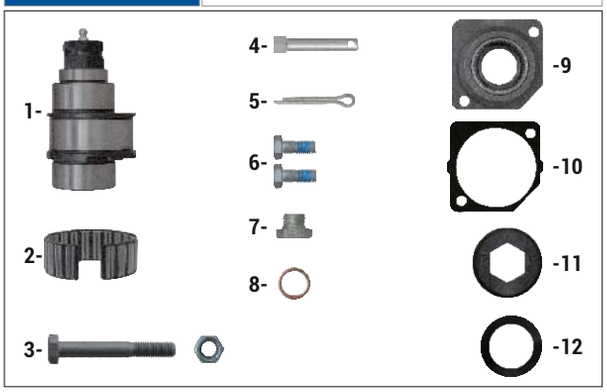

Shaft Repair Kit

OEM NUMBER	MCK1294

NR	CHEEFT NR	DESCRIPTIONS	DIMENSION	QTY
1	2646	SHAFT		1
2	2050	ROLLER BEARING		1
3	4520	BOLT WITH NUT	M8 x 60 mm	1
4	2860	PIN		1
5	2861	PIN LOCKER		1
6	2682	COVER BOLT	M8 x 1,25 x 20 mm	2
7	2686	PLUG BOLT		1
8	2637	WASHER	Ø19 / Ø13 mm	1
9	2699	SHAFT BEARING		1
10	2632	GASKET		1
11	2724	SHAFT DUST COVER		1
12	2715	WASHER		1

CHEEFT NUMBER	2146

Caliper Push Plate Repair Kit (Right)

OEM NUMBER	

NR	CHEEFT NR	DESCRIPTIONS	DIMENSION	QTY
1	2143	PUSH PLATE		1
2	2228	CALIBRATION BOLT (RIGHT)		2
3	2683	BOLT	M10 x 1,5 x 20 mm	2

CHEEFT NUMBER	2147

Caliper Push Plate Repair Kit (Left)

OEM NUMBER	

NR	CHEEFT NR	DESCRIPTIONS	DIMENSION	QTY
1	2143	PUSH PLATE		1
2	2229	CALIBRATION BOLT (LEFT)		2
3	2683	BOLT	M10 x 1,5 x 20 mm	2

ORIGINAL PART NUMBERS,MARKS AND MODELS MENTIONED ARE ONLY FOR DESCRIPTION PURPOSES.

DX 225 TYPE

CHEEFT NUMBER	2278

Caliper Gear & Bridge Assembly Kit (Left)

OEM NUMBER	

NR	CHEEFT NR	DESCRIPTIONS	DIMENSION	QTY
1	2149	BRIDGE ASSEMBLY	169 mm	1
2	2144	ADJUSTMENT SLEEVE (LEFT)		1
3	2238	CENTERING GEAR KIT		1

CHEEFT NUMBER	2279

Caliper Gear & Bridge Assembly Kit (Right)

OEM NUMBER	

NR	CHEEFT NR	DESCRIPTIONS	DIMENSION	QTY
1	2149	BRIDGE ASSEMBLY	169 mm	1
2	2145	ADJUSTMENT SLEEVE (RIGHT)		1
3	2238	CENTERING GEAR KIT		1

CHEEFT NUMBER	2280

Caliper Assembly Kit (Left)

OEM NUMBER	

NR	CHEEFT NR	DESCRIPTIONS	DIMENSION	QTY
1	2149	BRIDGE ASSEMBLY	169 mm	1
2	2144	ADJUSTMENT SLEEVE (LEFT)		1
3	2147	PUSH PLATE REPAIR KIT (LEFT)		1
4	2760	GUIDE PIN DUST EXCLUDER		2
5	2762	SEAL		2
6	2740	STEEL CAP	Ø37 x 15 mm	1

ORIGINAL PART NUMBERS,MARKS AND MODELS MENTIONED ARE ONLY FOR DESCRIPTION PURPOSES.

DX 225 TYPE

CHEEFT NUMBER	2281

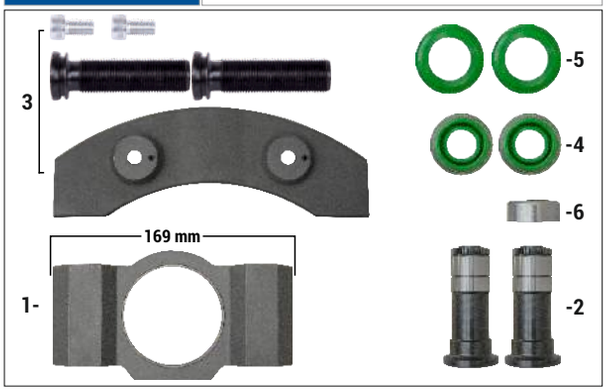

Caliper Assembly Kit (Right)

OEM NUMBER	

NR	CHEEFT NR	DESCRIPTIONS	DIMENSION	QTY
1	2149	BRIDGE ASSEMBLY	169 mm	1
2	2145	ADJUSTMENT SLEEVE (RIGHT)		1
3	2146	PUSH PLATE REPAIR KIT (RIGHT)		1
4	2760	GUIDE PIN DUST EXCLUDER		2
5	2762	SEAL		2
6	2740	STEEL CAP	Ø37 x 15 mm	1

CHEEFT NUMBER	2144

Caliper Adjustment Sleeve (Left)

OEM NUMBER	

NR	CHEEFT NR	DESCRIPTIONS	DIMENSION	QTY
1	2743	ADJUSTMENT SLEEVE (LEFT)		2

CHEEFT NUMBER	2145

Caliper Adjustment Sleeve (Right)

OEM NUMBER	

NR	CHEEFT NR	DESCRIPTIONS	DIMENSION	QTY
1	2744	ADJUSTMENT SLEEVE (RIGHT)		2

ORIGINAL PART NUMBERS,MARKS AND MODELS MENTIONED ARE ONLY FOR DESCRIPTION PURPOSES.

DX 225 TYPE

CHEEFT NUMBER	2164

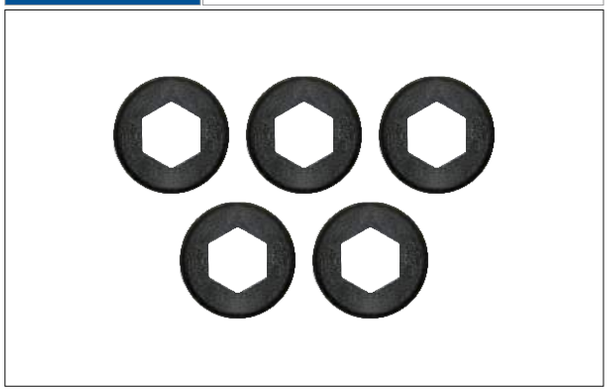

Shaft Dust Cover Kit

OEM NUMBER	

NR	CHEEFT NR	DESCRIPTIONS	DIMENSION	QTY
1	2724	SHAFT DUST COVER		5

CHEEFT NUMBER	2165

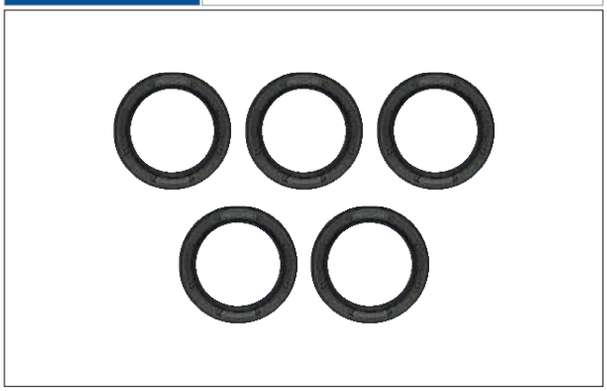

Cover Plate Seal Kit

OEM NUMBER	

NR	CHEEFT NR	DESCRIPTIONS	DIMENSION	QTY
1	2725	COVER PLATE SEAL		5

CHEEFT NUMBER	2059

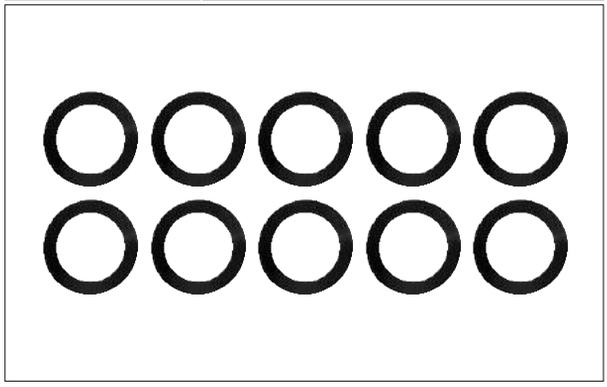

Caliper Washer Kit

OEM NUMBER	

NR	CHEEFT NR	DESCRIPTIONS	DIMENSION	QTY
1	2715	WASHER		10

ORIGINAL PART NUMBERS,MARKS AND MODELS MENTIONED ARE ONLY FOR DESCRIPTION PURPOSES.

DX 225 TYPE

Caliper Push Plate	
CHEEFT NUMBER	2143
OEM NUMBER	

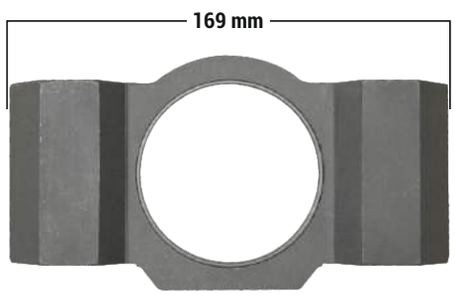

Caliper Bridge Assembly	
CHEEFT NUMBER	2149
OEM NUMBER	

Caliper Calibration Bolt (Right)	
CHEEFT NUMBER	2228
OEM NUMBER	

Caliper Calibration Bolt (Left)	
CHEEFT NUMBER	2229
OEM NUMBER	

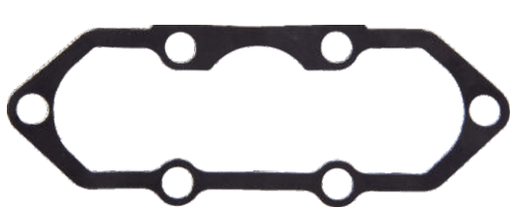

Caliper Cover Gasket	
CHEEFT NUMBER	2170
OEM NUMBER	

ORIGINAL PART NUMBERS,MARKS AND MODELS MENTIONED ARE ONLY FOR DESCRIPTION PURPOSES.

DX 225 TYPE

Caliper Cover (Left)	
CHEEFT NUMBER	2177
OEM NUMBER	

Caliper Cover (Right)	
CHEEFT NUMBER	2178
OEM NUMBER	

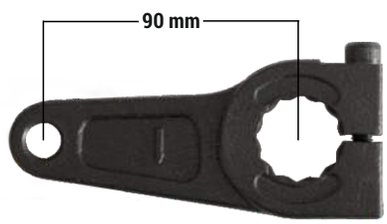

Caliper Shaft Lever (90 mm)	
CHEEFT NUMBER	2046
OEM NUMBER	MCK1161 - MN N2509990223 - STRMCK1161 DF 1675766 - VLV AMMCK1161 ASTR 98133540AS - FRUEHAUF CF103650 RVI 5021139151 - 5021170883

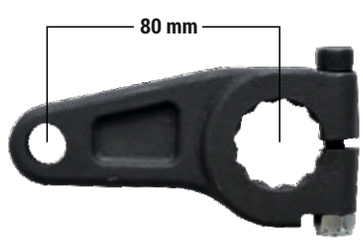

Caliper Shaft Lever	
CHEEFT NUMBER	2062
OEM NUMBER	MCK1160 - MN N2509990221-STRMCK1160 DF 1675768 - VLV AMMCK1160 RNLT 5021 139 150-5021 170 882

Caliper Pad Retainer	
CHEEFT NUMBER	2237
OEM NUMBER	

ORIGINAL PART NUMBERS,MARKS AND MODELS MENTIONED ARE ONLY FOR DESCRIPTION PURPOSES.

DX 225 TYPE

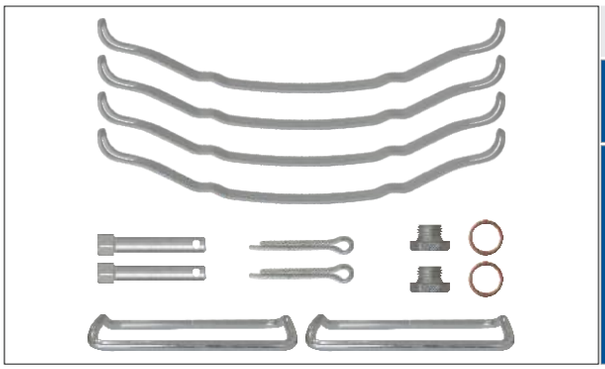

Caliper Pad Retainer Repair Kit	
CHEEFT NUMBER	2248
OEM NUMBER	MBA100

ORIGINAL PART NUMBERS,MARKS AND MODELS MENTIONED ARE ONLY FOR DESCRIPTION PURPOSES.

DX 225 TYPE

DX 225 REPAIR SET (RIGHT)

CHEEFT NUMBER	CHS2021

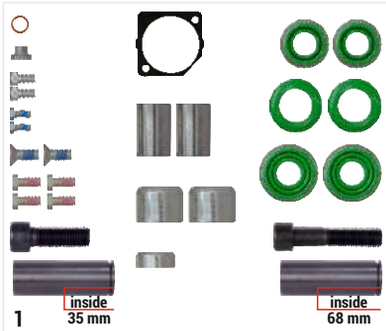

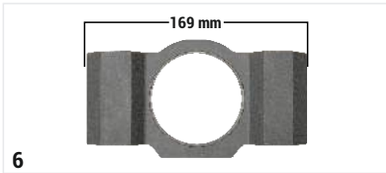

NR	CHEEFT NR	DESCRIPTIONS	QTY
1	2060	OVERHAUL REPAIR KIT	1
2	2049	SHAFT ASSEMBLY	1
3	2050	ROLLER BEARING	1
4	2146	PUSH PLATE REPAIR KIT (RIGHT)	1
5	2062	SHAFT LEVER	1
6	2149	BRIDGE ASSEMBLY	1
7	2724	SHAFT DUST COVER	1
8	2725	COVER PLATE SEAL	1
9	2145	ADJUSTMENT SLEEVE (RIGHT)	1
10	2699	SHAFT BEARING	1

NR	CHEEFT NR	DESCRIPTIONS	QTY
11	2238	CENTERING GEAR KIT	1
12	2166	ADJUSTING MECHANISM REPAIR KIT (RIGHT)	1
13	2715	WASHER	1

DX 225 REPAIR SET (LEFT)

CHEEFT NUMBER	CHS2022

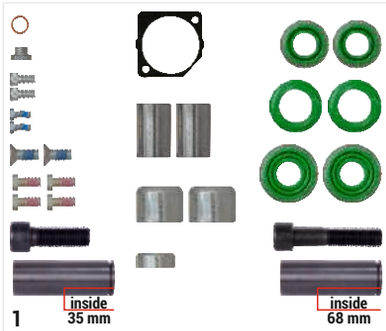

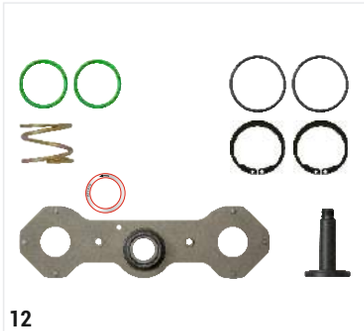

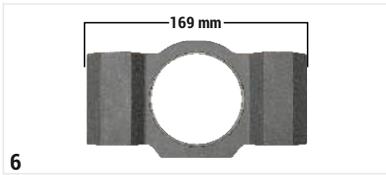

NR	CHEEFT NR	DESCRIPTIONS	QTY
1	2060	OVERHAUL REPAIR KIT	1
2	2049	SHAFT ASSEMBLY	1
3	2050	ROLLER BEARING	1
4	2147	PUSH PLATE REPAIR KIT (LEFT)	1
5	2062	SHAFT LEVER	1
6	2149	BRIDGE ASSEMBLY	1
7	2724	SHAFT DUST COVER	1
8	2725	COVER PLATE SEAL	1
9	2144	ADJUSTMENT SLEEVE (LEFT)	1
10	2699	SHAFT BEARING	1

NR	CHEEFT NR	DESCRIPTIONS	QTY
11	2238	CENTERING GEAR KIT	1
12	2167	ADJUSTING MECHANISM REPAIR KIT (LEFT)	1
13	2715	WASHER	1

ORIGINAL PART NUMBERS,MARKS AND MODELS MENTIONED ARE ONLY FOR DESCRIPTION PURPOSES.

MRT

COHEEFT®

AIR DISC BRAKE CALIPER REPAIR KITS

RADIAL

MRT

ELSA 1 RADIAL/AXIAL TYPE

Always the Best...

EAC CE JAS-ANZ UDEM ISO 9001 2015

COHEEFT®

AIR DISC BRAKE CALIPER REPAIR KITS

AXIAL

MRT

ELSA 1 RADIAL/AXIAL TYPE

Always the Best...

EAC CE UDEM JAS-ANZ ISO 9001 2015

COHEEFT®
AIR DISC BRAKE CALIPER REPAIR KITS

MRT

ELSA 1 RADIAL/AXIAL TYPE

Always the Best...

ELSA 1 RADIAL/AXIAL TYPE

CHEEFT NUMBER	2067

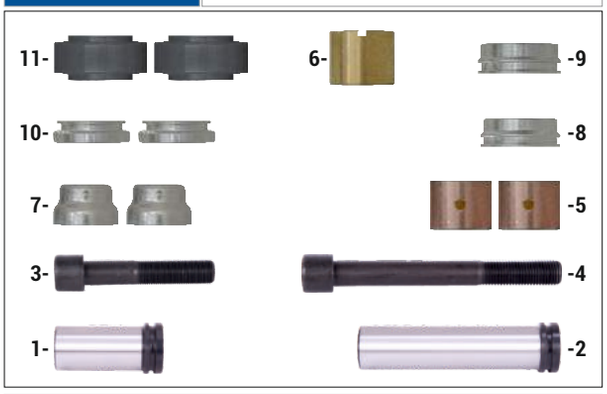

Caliper Guides & Seals Repair Kit

OEM NUMBER	MCK1102 - ST1157 - DF 1522034 VAN HOOL 10770779 - ZF 0501213164 MN 81.50802.6017 - 81.50802.6020 81.50802.6021 - 35.50310.9496

NR	CHEEFT NR	DESCRIPTIONS	DIMENSION	QTY
1	2505	GUIDE PIN	Ø35 x 72,50 mm	1
2	2509	GUIDE PIN	Ø35 x 135 mm	1
3	2558	BOLT	M20 x 1,5 x 90 mm	1
4	2560	BOLT	M20 x 1,5 x 150 mm	1
5	2521	PLAIN BUSH	Ø39 x Ø35 x 30 mm	2
6	2527	BRONZE OVAL BUSH	Ø40 x Ø37,3/35,3 x 32,5 mm	1
7	2544	STEEL CAP	Ø44 x 27 mm	2
8	2572	DUST EXCLUDER RETAINER	Ø39 x 15 mm	1
9	2573	DUST EXCLUDER RETAINER	Ø40 x 15 mm	1
10	2577	DUST EXCLUDER RETAINER	Ø48 x 13,5 mm	2
11	2582	DUST EXCLUDER		2

CHEEFT NUMBER	2141

Caliper Guides & Seals Repair Kit

OEM NUMBER	MN 81.50802.6022 - MCK1103

NR	CHEEFT NR	DESCRIPTIONS	DIMENSION	QTY
1	2511	GUIDE PIN (WITH BOLT)	Ø28,50 x 84,50/110 mm	1
2	2509	GUIDE PIN	Ø35 x 135 mm	1
3	2560	BOLT	M20 x 1,5 x 150 mm	1
4	2521	PLAIN BUSH	Ø39 x Ø35 x 30 mm	2
5	2529	RUBBER BUSH	Ø40 x Ø29 x 27 mm	1
6	2544	STEEL CAP	Ø44 x 27 mm	2
7	2572	DUST EXCLUDER RETAINER	Ø39 x 15 mm	1
8	2574	DUST EXCLUDER RETAINER	Ø40 x 19,3 mm	1
9	2582	DUST EXCLUDER		2

CHEEFT NUMBER	2069

Caliper Tappet Dust Covers

OEM NUMBER	ST1156 - RNLT 5001 849 886 MN 81.50802.6016 - 35.50310.9502 VAN HOOL N508026022 - ZF 0501211883

NR	CHEEFT NR	DESCRIPTIONS	DIMENSION	QTY
1	2583	TAPPET DUST COVER		2

ORIGINAL PART NUMBERS,MARKS AND MODELS MENTIONED ARE ONLY FOR DESCRIPTION PURPOSES.

ELSA 1 RADIAL/AXIAL TYPE

CHEEFT NUMBER	2255

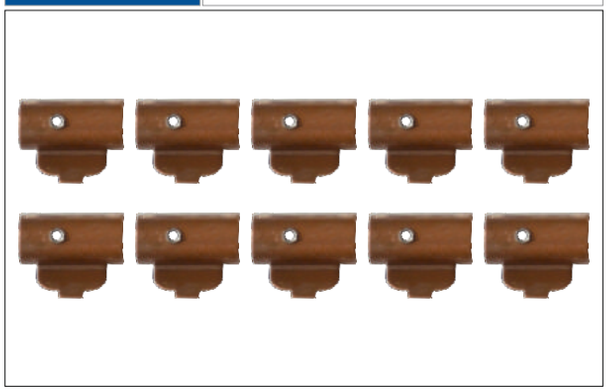

Caliper Lever Bushes Kit

OEM NUMBER	

NR	CHEEFT NR	DESCRIPTIONS	DIMENSION	QTY
1	2633	LEVER BUSH		10

CHEEFT NUMBER	2070

Caliper Bearing Repair Kit (Axial)

OEM NUMBER	DF 1522169 - SJ4112 - VLV 3092329

NR	CHEEFT NR	DESCRIPTIONS	DIMENSION	QTY
1	2071	ROLLER BEARINGS		1
2	2633	LEVER BUSH		2
3	2634	ROLLER		2

CHEEFT NUMBER	2043

Caliper Lever Repair Kit (Left)

OEM NUMBER	

NR	CHEEFT NR	DESCRIPTIONS	DIMENSION	QTY
1	2219	LEVER (LEFT)		1
2	2070	CALIPER BEARING REPAIR KIT		1

ORIGINAL PART NUMBERS,MARKS AND MODELS MENTIONED ARE ONLY FOR DESCRIPTION PURPOSES.

ELSA 1 RADIAL/AXIAL TYPE

CHEEFT NUMBER	2044

Caliper Lever Repair Kit (Right)

OEM NUMBER	

NR	CHEEFT NR	DESCRIPTIONS	DIMENSION	QTY
1	2220	LEVER (RIGHT)		1
2	2070	CALIPER BEARING REPAIR KIT		1

CHEEFT NUMBER	2035

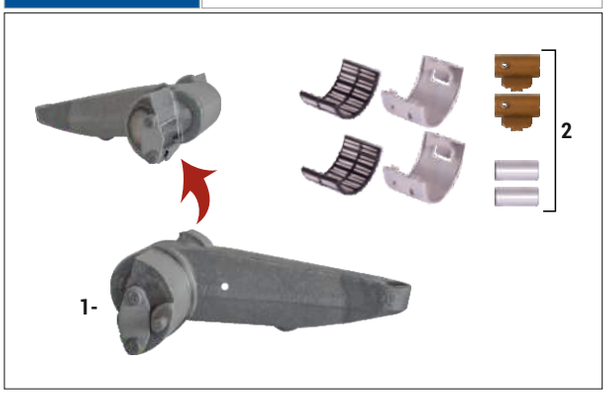

Caliper Lever - Radial (Right)

OEM NUMBER	

NR	CHEEFT NR	DESCRIPTIONS	DIMENSION	QTY
1	2157	LEVER (RIGHT)		1
2	2204	BEARING REPAIR KIT (RADIAL)		1

CHEEFT NUMBER	2036

Caliper Lever - Radial (Left)

OEM NUMBER	

NR	CHEEFT NR	DESCRIPTIONS	DIMENSION	QTY
1	2158	LEVER (LEFT)		1
2	2204	BEARING REPAIR KIT (RADIAL)		1

ORIGINAL PART NUMBERS,MARKS AND MODELS MENTIONED ARE ONLY FOR DESCRIPTION PURPOSES.

ELSA 1 RADIAL/AXIAL TYPE

CHEEFT NUMBER	2287

Adjusting Mechanism (Right - Old Type)

OEM NUMBER	

NR	CHEEFT NR	DESCRIPTIONS	DIMENSION	QTY
1	2819	ADJUSTING MECHANISM (RIGHT)	48 mm	1
2	2781	MECHANISM RETAINER		1

CHEEFT NUMBER	2288

Adjusting Mechanism (Left - Old Type)

OEM NUMBER	

NR	CHEEFT NR	DESCRIPTIONS	DIMENSION	QTY
1	2820	ADJUSTING MECHANISM (LEFT)	48 mm	1
2	2781	MECHANISM RETAINER		1

CHEEFT NUMBER	2317

Adjusting Mechanism & Housing (Right - Old Type)

OEM NUMBER	

NR	CHEEFT NR	DESCRIPTIONS	DIMENSION	QTY
1	2074	ADJUSTING MECHANISM (RIGHT)		1
2	2287	ADJUSTING MECHANISM (RIGHT)	48 mm	1

ORIGINAL PART NUMBERS,MARKS AND MODELS MENTIONED ARE ONLY FOR DESCRIPTION PURPOSES.

ELSA 1 RADIAL/AXIAL TYPE

CHEEFT NUMBER	2318

Adjusting Mechanism & Housing (Left - Old Type)

OEM NUMBER	

NR	CHEEFT NR	DESCRIPTIONS	DIMENSION	QTY
1	2074	ADJUSTING MECHANISM (LEFT)		1
2	2288	ADJUSTING MECHANISM (LEFT)	48 mm	1

CHEEFT NUMBER	2201

Caliper Adjusting Mechanism & Housing (Right - New Type)

OEM NUMBER	

NR	CHEEFT NR	DESCRIPTIONS	DIMENSION	QTY
1	2072	ADJUSTING MECHANISM (RIGHT)	44 mm	1
2	2074	ADJUSTING MECHANISM		1

CHEEFT NUMBER	2202

Caliper Adjusting Mechanism & Housing (Left - New Type)

OEM NUMBER	

NR	CHEEFT NR	DESCRIPTIONS	DIMENSION	QTY
1	2073	ADJUSTING MECHANISM (LEFT)	44 mm	1
2	2074	ADJUSTING MECHANISM		1

ORIGINAL PART NUMBERS,MARKS AND MODELS MENTIONED ARE ONLY FOR DESCRIPTION PURPOSES.

ELSA 1 RADIAL/AXIAL TYPE

CHEEFT NUMBER	2077

Caliper Adjusting Mechanism (Right)

OEM NUMBER	

NR	CHEEFT NR	DESCRIPTIONS	DIMENSION	QTY
1	2075	MECHANISM GEAR (RIGHT)	Ø35 mm	2
2	2635	STEEL CAP		2
3	2649	INTERMEDIATE GEAR	Ø35 mm	1
4	2666	COMPRESSION SPRING	Ø49,5 x 57 mm	1

CHEEFT NUMBER	2078

Caliper Adjusting Mechanism (Left)

OEM NUMBER	

NR	CHEEFT NR	DESCRIPTIONS	DIMENSION	QTY
1	2076	MECHANISM GEAR (LEFT)	Ø35 mm	2
2	2635	STEEL CAP		2
3	2649	INTERMEDIATE GEAR	Ø35 mm	1
4	2666	COMPRESSION SPRING	Ø49,5 x 57 mm	1

CHEEFT NUMBER	2217

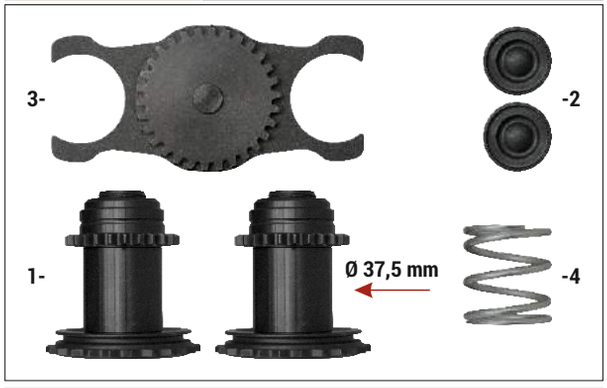

Caliper Adjusting Mechanism (Right)

OEM NUMBER	

NR	CHEEFT NR	DESCRIPTIONS	DIMENSION	QTY
1	2215	MECHANISM GEAR (RIGHT)	Ø37,5 mm	2
2	2635	STEEL CAP		2
3	2653	INTERMEDIATE GEAR	Ø37,5 mm	1
4	2666	COMPRESSION SPRING	Ø49,5 x 57 mm	1

ORIGINAL PART NUMBERS,MARKS AND MODELS MENTIONED ARE ONLY FOR DESCRIPTION PURPOSES.

ELSA 1 RADIAL/AXIAL TYPE

CHEEFT NUMBER	2218

Caliper Adjusting Mechanism (Left)

OEM NUMBER	

NR	CHEEFT NR	DESCRIPTIONS	DIMENSION	QTY
1	2216	MECHANISM GEAR (LEFT)	Ø37,5 mm	2
2	2635	STEEL CAP		2
3	2653	INTERMEDIATE GEAR	Ø37,5 mm	1
4	2666	COMPRESSION SPRING	Ø49,5 x 57 mm	1

CHEEFT NUMBER	2168

Caliper Gear Bush (For 35 mm Gear Assembly)

OEM NUMBER	

NR	CHEEFT NR	DESCRIPTIONS	DIMENSION	QTY
1	2741	BUSH	(FOR 35 mm GEAR ASSEMBLY)	2

CHEEFT NUMBER	2169

Caliper Gear Bush (For 37,5 mm Gear Assembly)

OEM NUMBER	

NR	CHEEFT NR	DESCRIPTIONS	DIMENSION	QTY
1	2742	BUSH	(FOR 37,5 mm GEAR ASSEMBLY)	2

ORIGINAL PART NUMBERS,MARKS AND MODELS MENTIONED ARE ONLY FOR DESCRIPTION PURPOSES.

ELSA 1 RADIAL/AXIAL TYPE

CHEEFT NUMBER	2080

Caliper Spring & Retainers Repair Kit (Right)

OEM NUMBER	

NR	CHEEFT NR	DESCRIPTIONS	DIMENSION	QTY
1	2668	LEVER SPRING (RIGHT)		1
2	2705	SPRING RETAINER		1
3	2640	LEVER PIN RETAINER		1
4	2639	SPRING BRACKET		1
5	2598	BOLT	M6 x 12 mm	2

CHEEFT NUMBER	2081

Caliper Spring & Retainers Repair Kit (Left)

OEM NUMBER	

NR	CHEEFT NR	DESCRIPTIONS	DIMENSION	QTY
1	2669	LEVER SPRING (LEFT)		1
2	2705	SPRING RETAINER		1
3	2640	LEVER PIN RETAINER		1
4	2639	SPRING BRACKET		1
5	2598	BOLT	M6 x 12 mm	2

CHEEFT NUMBER	2171

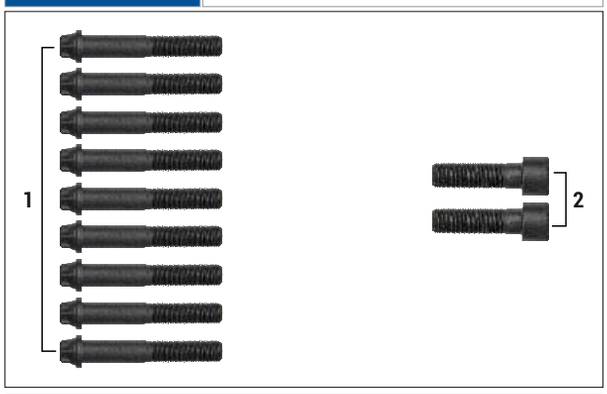

Caliper Cover Assembly Bolt Kit

OEM NUMBER	

NR	CHEEFT NR	DESCRIPTIONS	DIMENSION	QTY
1	2567	BOLT	M14 x 1,5 x 90 mm	9
2	2551	BOLT	M16 x 1,5 x 55 mm	2

ORIGINAL PART NUMBERS,MARKS AND MODELS MENTIONED ARE ONLY FOR DESCRIPTION PURPOSES.

ELSA 1 RADIAL/AXIAL TYPE

Caliper Roller Bearings	
CHEEFT NUMBER	2071
OEM NUMBER	

Caliper Adjusting Mechanism Clutch (Right - New Type)	
CHEEFT NUMBER	2072
OEM NUMBER	

Caliper Adjusting Mechanism Clutch (Left - New Type)	
CHEEFT NUMBER	2073
OEM NUMBER	

Caliper Gear Mechanism (Right)	
CHEEFT NUMBER	2249
OEM NUMBER	68322563 - VLV 3092280

Caliper Gear Mechanism (Left)	
CHEEFT NUMBER	2250
OEM NUMBER	68322562 - VLV 3092281

ORIGINAL PART NUMBERS,MARKS AND MODELS MENTIONED ARE ONLY FOR DESCRIPTION PURPOSES.

ELSA 1 RADIAL/AXIAL TYPE

Caliper Adjusting Mechanism	
CHEEFT NUMBER	2074
OEM NUMBER	

Caliper Mechanism Gear (Right)	
CHEEFT NUMBER	2075
OEM NUMBER	

Caliper Mechanism Gear (Left)	
CHEEFT NUMBER	2076
OEM NUMBER	

Caliper Mechanism Gear (Right)	
CHEEFT NUMBER	2215
OEM NUMBER	

Caliper Mechanism Gear (Left)	
CHEEFT NUMBER	2216
OEM NUMBER	

ORIGINAL PART NUMBERS,MARKS AND MODELS MENTIONED ARE ONLY FOR DESCRIPTION PURPOSES.

ELSA 1 RADIAL/AXIAL TYPE

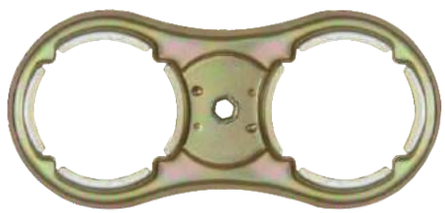

Caliper Locking Shim	
CHEEFT NUMBER	2079
OEM NUMBER	MN 81.50822.0006 - 68321678 ZF 0501318076

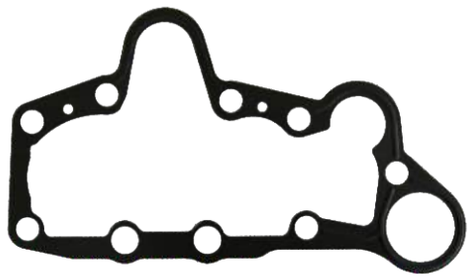

Caliper Cover Gasket	
CHEEFT NUMBER	2211
OEM NUMBER	

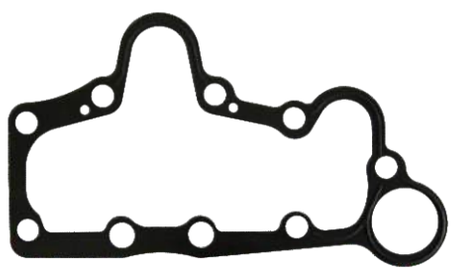

Caliper Cover Gasket	
CHEEFT NUMBER	2212
OEM NUMBER	

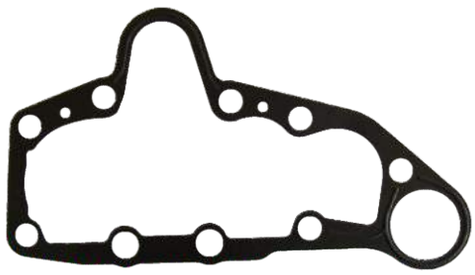

Caliper Cover Gasket	
CHEEFT NUMBER	2213
OEM NUMBER	

Caliper Pad Retainer Repair Kit	
CHEEFT NUMBER	2254
OEM NUMBER	MCK1262 - MN 81.50822.0007 RNLT 503128759

ORIGINAL PART NUMBERS,MARKS AND MODELS MENTIONED ARE ONLY FOR DESCRIPTION PURPOSES.

ELSA 1 RADIAL/AXIAL TYPE

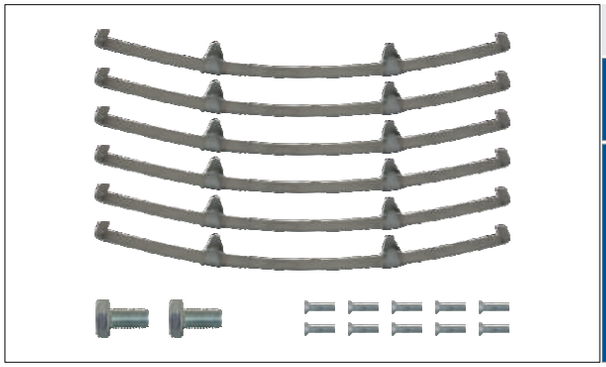

Caliper Pad Spring Kit	
CHEEFT NUMBER	2161
OEM NUMBER	MBA108 MRT RNLT 5001 845 969

ORIGINAL PART NUMBERS,MARKS AND MODELS MENTIONED ARE ONLY FOR DESCRIPTION PURPOSES.

ELSA 1 RADIAL/AXIAL TYPE

463-464 MN SET (RIGHT NEW MODEL)

CHEEFT NUMBER	CHS2008

1

2

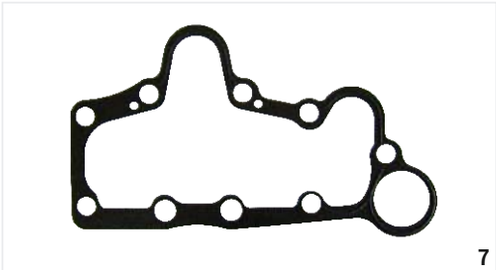
7

9

8

6

3

5

4

NR	CHEEFT NR	DESCRIPTIONS	QTY
1	2141	GUIDES & SEALS REPAIR KIT	1
2	2077	ADJUSTING MECHANISM (RIGHT) 35 mm	1
3	2072	ADJUSTING MECHANISM CLUTCH 44 mm	1
4	2070	BEARING REPAIR KIT (AXIAL)	1
5	2069	TAPPET DUST COVERS	1
6	2079	LOCKING SHIM	1
7	2212	COVER GASKET	1
8	2074	ADJUSTING MECHANISM	1
9	2080	SPRING & RETAINERS REPAIR KIT (RIGHT)	1

463-464 MN SET (LEFT NEW MODEL)

CHEEFT NUMBER	CHS2009

1

2

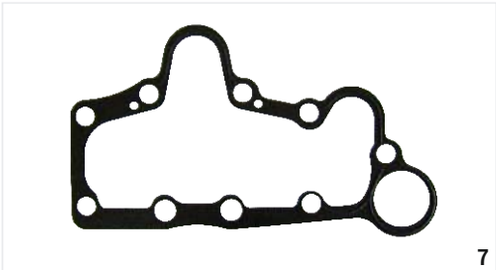
7

9

8

6

3

5

4

NR	CHEEFT NR	DESCRIPTIONS	QTY
1	2141	GUIDES & SEALS REPAIR KIT	1
2	2078	ADJUSTING MECHANISM (LEFT) 35 mm	1
3	2073	ADJUSTING MECHANISM CLUTCH 44 mm	1
4	2070	BEARING REPAIR KIT (AXIAL)	1
5	2069	TAPPET DUST COVERS	1
6	2079	LOCKING SHIM	1
7	2212	COVER GASKET	1
8	2074	ADJUSTING MECHANISM	1
9	2081	SPRING & RETAINERS REPAIR KIT (LEFT)	1

ORIGINAL PART NUMBERS,MARKS AND MODELS MENTIONED ARE ONLY FOR DESCRIPTION PURPOSES.

ELSA 1 RADIAL/AXIAL TYPE

463-464 MN SET (RIGHT NEW MODEL)

CHEEFT NUMBER	CHS2017

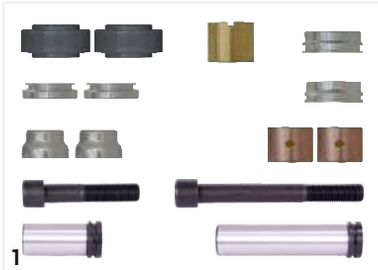

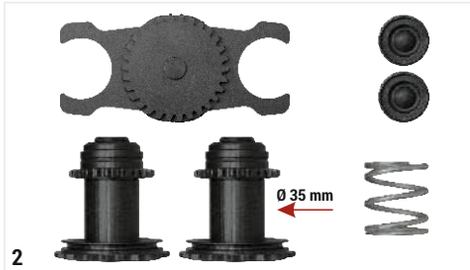

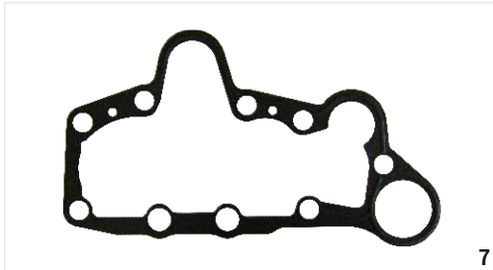

NR	CHEEFT NR	DESCRIPTIONS	QTY
1	2067	GUIDES & SEALS REPAIR KIT	1
2	2077	ADJUSTING MECHANISM (RIGHT) 35 mm	1
3	2072	ADJUSTING MECHANISM CLUTCH 44 mm	1
4	2070	BEARING REPAIR KIT (AXIAL)	1
5	2069	TAPPET DUST COVERS	1
6	2079	LOCKING SHIM	1
7	2211	COVER GASKET	1
8	2074	ADJUSTING MECHANISM	1
9	2080	SPRING & RETAINERS REPAIR KIT (RIGHT)	1

463-464 MN SET (LEFT NEW MODEL)

CHEEFT NUMBER	CHS2018

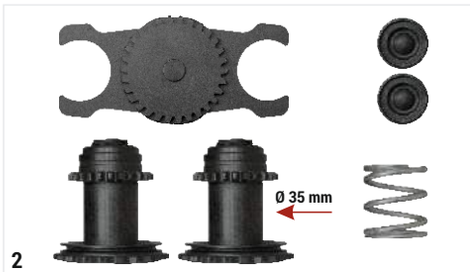

NR	CHEEFT NR	DESCRIPTIONS	QTY
1	2067	GUIDES & SEALS REPAIR KIT	1
2	2078	ADJUSTING MECHANISM (LEFT) 35 mm	1
3	2073	ADJUSTING MECHANISM CLUTCH 44 mm	1
4	2070	BEARING REPAIR KIT (AXIAL)	1
5	2069	TAPPET DUST COVERS	1
6	2079	LOCKING SHIM	1
7	2211	COVER GASKET	1
8	2074	ADJUSTING MECHANISM	1
9	2081	SPRING & RETAINERS REPAIR KIT (LEFT)	1

ORIGINAL PART NUMBERS,MARKS AND MODELS MENTIONED ARE ONLY FOR DESCRIPTION PURPOSES.

ELSA 1 RADIAL/AXIAL TYPE

463-464 MN SET (RIGHT OLD MODEL)

CHEEFT NUMBER CHS2010

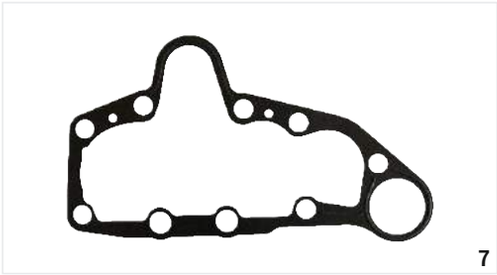

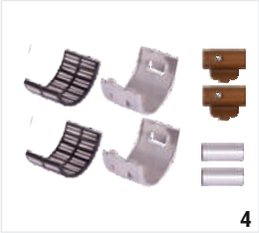

NR	CHEEFT NR	DESCRIPTIONS	QTY
1	2141	GUIDES & SEALS REPAIR KIT	1
2	2217	ADJUSTING MECHANISM (RIGHT) 37,5 mm	1
3	2072	ADJUSTING MECHANISM CLUTCH 44 mm	1
4	2070	BEARING REPAIR KIT (AXIAL)	1
5	2069	TAPPET DUST COVERS	1
6	2079	LOCKING SHIM	1
7	2213	COVER GASKET	1
8	2074	ADJUSTING MECHANISM	1
9	2080	SPRING & RETAINERS REPAIR KIT (RIGHT)	1

463-464 MN SET (LEFT OLD MODEL)

CHEEFT NUMBER CHS2011

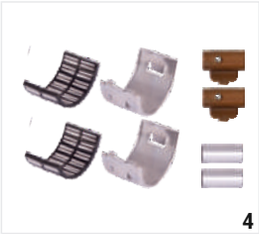

NR	CHEEFT NR	DESCRIPTIONS	QTY
1	2141	GUIDES & SEALS REPAIR KIT	1
2	2218	ADJUSTING MECHANISM (LEFT) 37,5 mm	1
3	2073	ADJUSTING MECHANISM CLUTCH 44 mm	1
4	2070	BEARING REPAIR KIT (AXIAL)	1
5	2069	TAPPET DUST COVERS	1
6	2079	LOCKING SHIM	1
7	2213	COVER GASKET	1
8	2074	ADJUSTING MECHANISM	1
9	2081	SPRING & RETAINERS REPAIR KIT (LEFT)	1

ORIGINAL PART NUMBERS,MARKS AND MODELS MENTIONED ARE ONLY FOR DESCRIPTION PURPOSES.

ELSA 1 RADIAL/AXIAL TYPE

463-464 MN SET (RIGHT OLD MODEL)

CHEEFT NUMBER	CHS2019

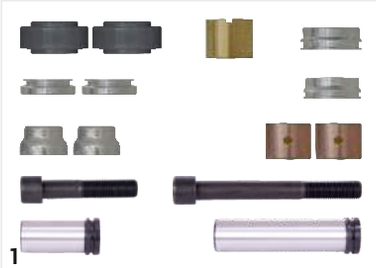

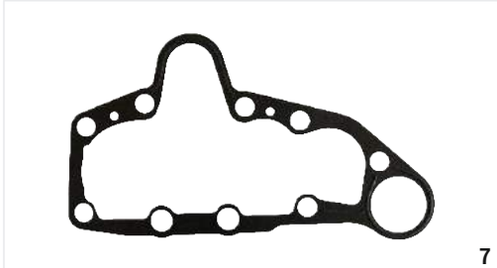

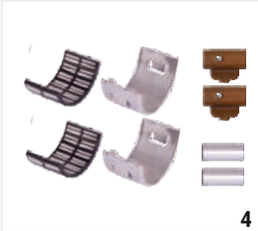

NR	CHEEFT NR	DESCRIPTIONS	QTY
1	2067	GUIDES & SEALS REPAIR KIT	1
2	2217	ADJUSTING MECHANISM (RIGHT) 37,5 mm	1
3	2072	ADJUSTING MECHANISM CLUTCH 44 mm	1
4	2070	BEARING REPAIR KIT (AXIAL)	1
5	2069	TAPPET DUST COVERS	1
6	2079	LOCKING SHIM	1
7	2213	COVER GASKET	1
8	2074	ADJUSTING MECHANISM	1
9	2080	SPRING & RETAINERS REPAIR KIT (RIGHT)	1

463-464 MN SET (LEFT OLD MODEL)

CHEEFT NUMBER	CHS2020

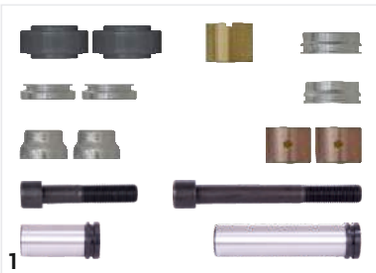

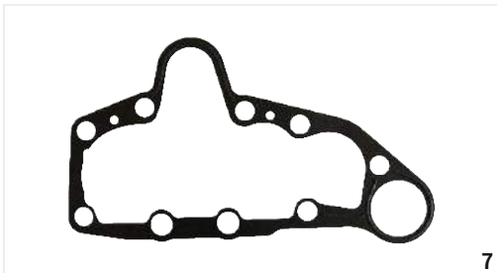

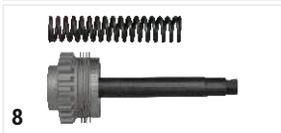

NR	CHEEFT NR	DESCRIPTIONS	QTY
1	2067	GUIDES & SEALS REPAIR KIT	1
2	2218	ADJUSTING MECHANISM (LEFT) 37,5 mm	1
3	2073	ADJUSTING MECHANISM CLUTCH 44 mm	1
4	2070	BEARING REPAIR KIT (AXIAL)	1
5	2069	TAPPET DUST COVERS	1
6	2079	LOCKING SHIM	1
7	2213	COVER GASKET	1
8	2074	ADJUSTING MECHANISM	1
9	2081	SPRING & RETAINERS REPAIR KIT (LEFT)	1

ORIGINAL PART NUMBERS,MARKS AND MODELS MENTIONED ARE ONLY FOR DESCRIPTION PURPOSES.

COHEEFT®

AIR DISC BRAKE CALIPER REPAIR KITS

RADIAL

MRT

ELSA 2 RADIAL/AXIAL TYPE

Always the Best...

EAC CE UDEM JAS-ANZ ISO 9001 2015

COHEEFT®
AIR DISC BRAKE CALIPER REPAIR KITS

MRT

ELSA 2 RADIAL/AXIAL TYPE

Always the Best...

ELSA 2 RADIAL/AXIAL TYPE

CHEEFT NUMBER	2133

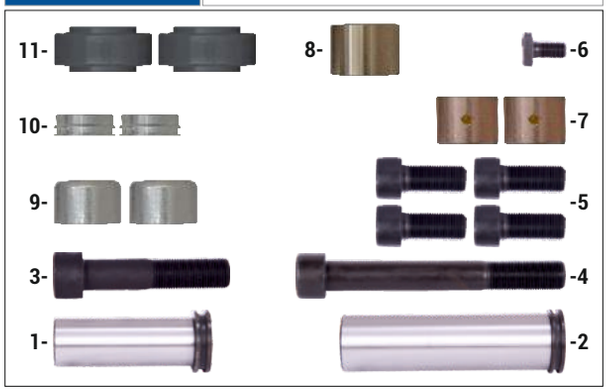

Caliper Guide & Seals Repair Kit

OEM NUMBER	MCK1140 - MCK1243 - MN 81.50802.6025 35.40311.2205 - IVECO 42555201 VLV 85107912 - MMCK1243 - RNLT 5001 860 791 PCCR 1522058 - ZF 0501215220

NR	CHEEFT NR	DESCRIPTIONS	DIMENSION	QTY
1	2501	GUIDE PIN	Ø31 x 83,5 mm	1
2	2510	GUIDE PIN	Ø35 x 144 mm	1
3	2553	BOLT	M18 x 1,5 x 90 mm	1
4	2556	BOLT	M18 x 1,5 x 150 mm	1
5	2552	BOLT	M16 x 1,5 x 40 mm	4
6	2681	BOLT	M10 x 1,25 x 20 mm	1
7	2521	PLAIN BUSH	Ø39 x Ø35 x 30 mm	2
8	2528	BRONZE OVAL BUSH	Ø42 x Ø 33/31,8 x 30 mm	1
9	2545	STEEL CAP	Ø44 x 28 mm	2
10	2575	DUST EXCLUDER RETAINER	Ø42 x 14 mm	2
11	2582	DUST EXCLUDER		2

CHEEFT NUMBER	2214

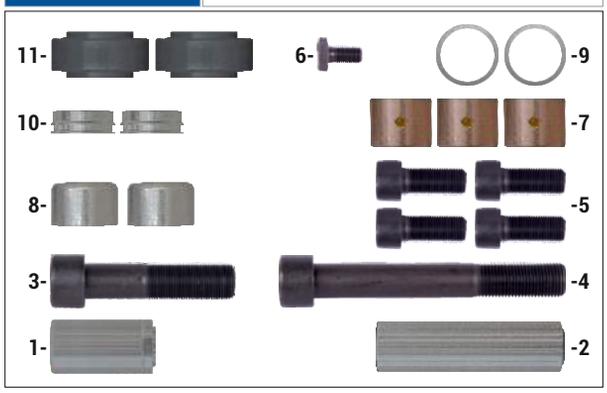

Caliper Guide & Seals Repair Kit

OEM NUMBER	MCK1086 - MN ZG002950002 - DF 1522185 RNLT 5001 858 717

NR	CHEEFT NR	DESCRIPTIONS	DIMENSION	QTY
1	2515	OVAL GUIDE PIN	Ø35/33 x 66,50 mm	1
2	2516	GUIDE PIN	Ø35 x 128,5 mm	1
3	2558	BOLT	M20 x 1,5 x 90 mm	1
4	2560	BOLT	M20 x 1,5 x 150 mm	1
5	2552	BOLT	M16 x 1,5 x 40 mm	4
6	2681	BOLT	M10 x 1,25 x 20 mm	1
7	2521	PLAIN BUSH	Ø39 x Ø35 x 30 mm	3
8	2545	STEEL CAP	Ø44 x 28 mm	2
9	2702	DUST EXCLUDER RETAINER	Ø42,5 x 2,5 mm	2
10	2701	DUST EXCLUDER RETAINER	Ø41,5 x 14 mm	2
11	2582	DUST EXCLUDER		2

CHEEFT NUMBER	2231

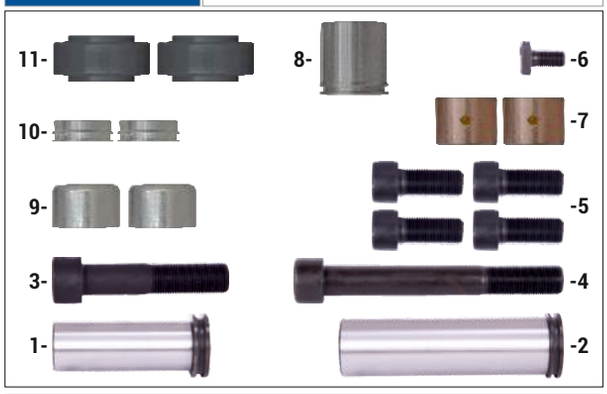

Caliper Guides & Seals Repair Kit

OEM NUMBER	MCK1289 - MN 81.50802.6026

NR	CHEEFT NR	DESCRIPTIONS	DIMENSION	QTY
1	2501	GUIDE PIN	Ø31 x 83,5 mm	1
2	2510	GUIDE PIN	Ø35 x 144 mm	1
3	2553	BOLT	M18 x 1,5 x 90 mm	1
4	2556	BOLT	M18 x 1,5 x 150 mm	1
5	2552	BOLT	M16 x 1,5 x 40 mm	4
6	2681	BOLT	M10 x 1,25 x 20 mm	1
7	2521	PLAIN BUSH	Ø39 x Ø35 x 30 mm	2
8	2536	METAL RUBBER BUSH	Ø42 x 31/32 x 45 mm	1
9	2545	STEEL CAP	Ø44 x 28 mm	2
10	2575	DUST EXCLUDER RETAINER	Ø42 x 14 mm	2
11	2582	DUST EXCLUDER		2

ORIGINAL PART NUMBERS,MARKS AND MODELS MENTIONED ARE ONLY FOR DESCRIPTION PURPOSES.

ELSA 2 RADIAL/AXIAL TYPE

CHEEFT NUMBER	2224

Caliper Mechanism Gear & Cover Set

OEM NUMBER	

NR	CHEEFT NR	DESCRIPTIONS	DIMENSION	QTY
1	2134	ADJUSTER MECHANISM		1
2	2135	CALIBRATION GEAR		2
3	2136	CALIBRATION MECHANISM COVER		1
4	2142	TAPPET DUST COVERS		1

CHEEFT NUMBER	2136

Calibration Mechanism Cover (Aluminium)

OEM NUMBER	68324625

NR	CHEEFT NR	DESCRIPTIONS	DIMENSION	QTY
1	2562	BOLT	M8 x 45 mm	8
2	2660	COVER GASKET		1
3	2732	ALUMINIUM COVER		1

Caliper Adjuster Mechanism

CHEEFT NUMBER	2134
OEM NUMBER	

ORIGINAL PART NUMBERS,MARKS AND MODELS MENTIONED ARE ONLY FOR DESCRIPTION PURPOSES.

ELSA 2 RADIAL/AXIAL TYPE

CHEEFT NUMBER	2246

Caliper Mechanism Gear & Cover Kit

OEM NUMBER	

NR	CHEEFT NR	DESCRIPTIONS	DIMENSION	QTY
1	2232	ADJUSTER MECHANISM		1
2	2235	CALIBRATION GEAR		2
3	2230	CALIBRATION MECHANISM COVER		1
4	2142	TAPPET DUST COVERS		1

CHEEFT NUMBER	2230

Calibration Mechanism Cover (Aluminium)

OEM NUMBER	68323564

NR	CHEEFT NR	DESCRIPTIONS	DIMENSION	QTY
1	2562	BOLT	M8 x 45 mm	8
2	2659	COVER GASKET		1
3	2731	ALUMINIUM COVER		1

Caliper Adjuster Mechanism

CHEEFT NUMBER	2232
OEM NUMBER	

ORIGINAL PART NUMBERS,MARKS AND MODELS MENTIONED ARE ONLY FOR DESCRIPTION PURPOSES.

ELSA 2 RADIAL/AXIAL TYPE

CHEEFT NUMBER	2139

Aluminium Cover Bush & Seal Kit

OEM NUMBER	

NR	CHEEFT NR	DESCRIPTIONS	DIMENSION	QTY
1	2534	TEFLON BUSH		2
2	2580	DUST EXCLUDER RETAINER		2
3	2638	MECHANISM SEAL		2

CHEEFT NUMBER	2142

Caliper Tappet Dust Covers

OEM NUMBER	

NR	CHEEFT NR	DESCRIPTIONS	DIMENSION	QTY
1	2585	TAPPET DUST COVER		2

CHEEFT NUMBER	2189

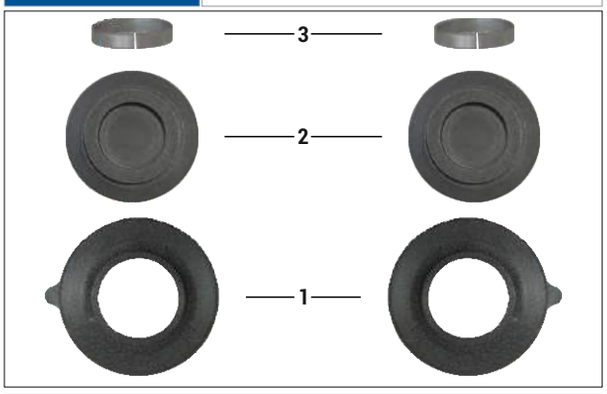

Caliper Tappet & Boot Repair Kit

OEM NUMBER	MCK1309 - VLV 85109891 RNLT 5001 866 398

NR	CHEEFT NR	DESCRIPTIONS	DIMENSION	QTY
1	2585	TAPPET DUST COVER		2
2	2612	TAPPET HEAD		2
3	2614	TAPPET HEAD RING	Ø34 x 32 x 6,5 mm	2

ORIGINAL PART NUMBERS,MARKS AND MODELS MENTIONED ARE ONLY FOR DESCRIPTION PURPOSES.

ELSA 2 RADIAL/AXIAL TYPE

CHEEFT NUMBER	2272

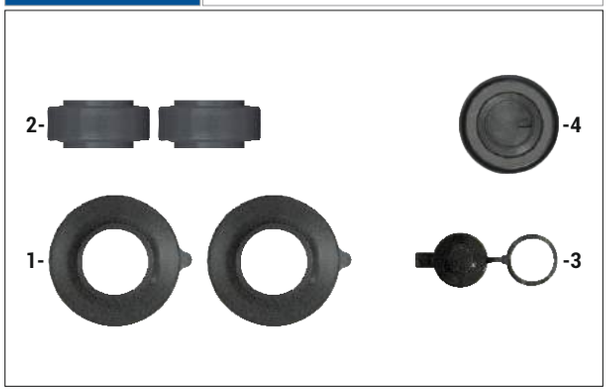

Tappet & Boot Assembly Repair Kit

OEM NUMBER	MN N2965026008 - 35.50307.5636 MRT MCK1088

NR	CHEEFT NR	DESCRIPTIONS	DIMENSION	QTY
1	2585	TAPPET DUST COVER		2
2	2582	DUST EXCLUDER		2
3	2192	ADJUSTER DUST BOOT		1
4	2200	ACTUATOR SEAL		1

CHEEFT NUMBER	2263

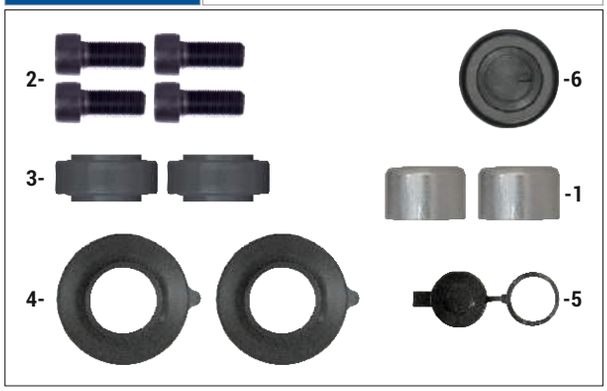

Caliper Seals & Bolts Repair Kit

OEM NUMBER	MCK1244 RNLT 5001 858 718 - 5001 860 792

NR	CHEEFT NR	DESCRIPTIONS	DIMENSION	QTY
1	2545	STEEL CAP	Ø44 x 28 mm	2
2	2552	BOLT	M16 x 1,5 x 40 mm	4
3	2582	DUST EXCLUDER		2
4	2585	TAPPET DUST COVER		2
5	2192	ADJUSTER DUST BOOT		1
6	2200	ACTUATOR SEAL		1

CHEEFT NUMBER	2182

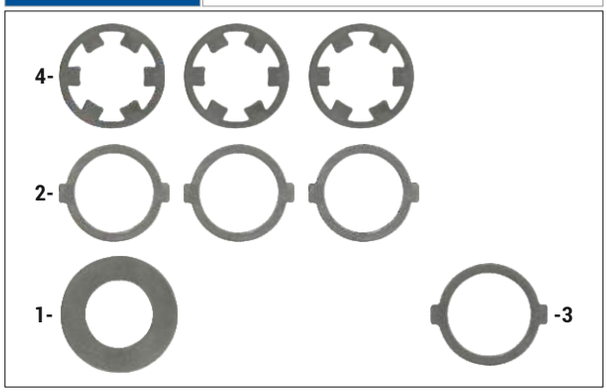

Mechanism Washer Repair Kit

OEM NUMBER	

NR	CHEEFT NR	DESCRIPTIONS	DIMENSION	QTY
1	2831	BEARING PLATE		1
2	2832	WASHER		3
3	2833	WASHER		1
4	2834	WASHER		3

ORIGINAL PART NUMBERS,MARKS AND MODELS MENTIONED ARE ONLY FOR DESCRIPTION PURPOSES.

ELSA 2 RADIAL/AXIAL TYPE

CHEEFT NUMBER	2255

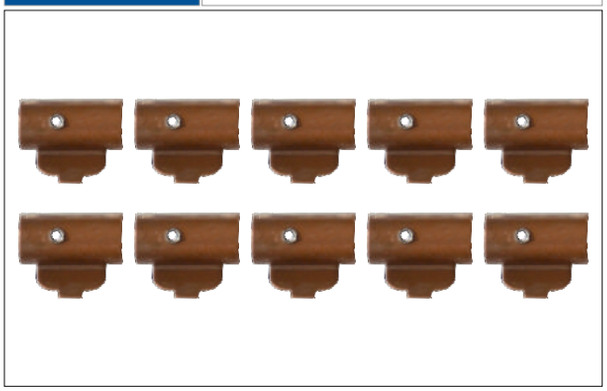

Caliper Lever Bushes Kit

OEM NUMBER	

NR	CHEEFT NR	DESCRIPTIONS	DIMENSION	QTY
1	2633	LEVER BUSH		10

CHEEFT NUMBER	2070

Caliper Bearing Repair Kit (Axial)

OEM NUMBER	DF 1522169 - SJ4112 - VLV 3092329

NR	CHEEFT NR	DESCRIPTIONS	DIMENSION	QTY
1	2071	ROLLER BEARINGS		1
2	2633	LEVER BUSH		2
3	2634	ROLLER		2

CHEEFT NUMBER	2037

Caliper Lever Repair Kit (Length 123 mm)

OEM NUMBER	

NR	CHEEFT NR	DESCRIPTIONS	DIMENSION	QTY
1	2195	CALIPER LEVER (LENGTH 123 mm)		1
2	2070	CALIPER BEARING REPAIR KIT		1

ORIGINAL PART NUMBERS,MARKS AND MODELS MENTIONED ARE ONLY FOR DESCRIPTION PURPOSES.

ELSA 2 RADIAL/AXIAL TYPE

CHEEFT NUMBER	2256

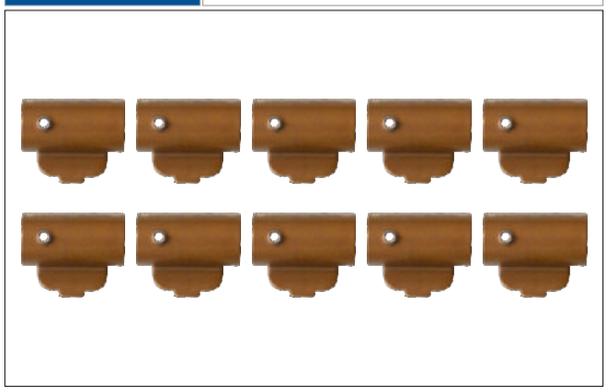

Caliper Lever Bushes Kit

OEM NUMBER	

NR	CHEEFT NR	DESCRIPTIONS	DIMENSION	QTY
1	2672	LEVER BUSH		10

CHEEFT NUMBER	2204

Caliper Bearing Repair Kit (Radial)

OEM NUMBER	SJ4098 - VLV 3092261

NR	CHEEFT NR	DESCRIPTIONS	DIMENSION	QTY
1	2071	ROLLER BEARINGS		1
2	2672	LEVER BUSH		2
3	2634	ROLLER		2

CHEEFT NUMBER	2034

Caliper Lever Repair Kit (Radial)

OEM NUMBER	

NR	CHEEFT NR	DESCRIPTIONS	DIMENSION	QTY
1	2206	CALIPER LEVER (RADIAL)		1
2	2204	BEARING REPAIR KIT (RADIAL)		1

ORIGINAL PART NUMBERS,MARKS AND MODELS MENTIONED ARE ONLY FOR DESCRIPTION PURPOSES.

ELSA 2 RADIAL/AXIAL TYPE

Caliper Roller Bearings	
CHEEFT NUMBER	2071
OEM NUMBER	

Caliper Adjuster Gear (Left)	
CHEEFT NUMBER	2137
OEM NUMBER	

Caliper Adjuster Gear (Right)	
CHEEFT NUMBER	2138
OEM NUMBER	

Caliper Bearing Caps	
CHEEFT NUMBER	2140
OEM NUMBER	

Caliper Adjuster Dust Boot	
CHEEFT NUMBER	2192
OEM NUMBER	MRT 68322655 - 68322655PK10 MN 81.50810.0005 PCCR 1489071 VLV 3092282 - AM68322655 RNLT 5006 028 417

ORIGINAL PART NUMBERS,MARKS AND MODELS MENTIONED ARE ONLY FOR DESCRIPTION PURPOSES.

ELSA 2 RADIAL/AXIAL TYPE

Caliper Calibration Gear	
CHEEFT NUMBER	2135
OEM NUMBER	

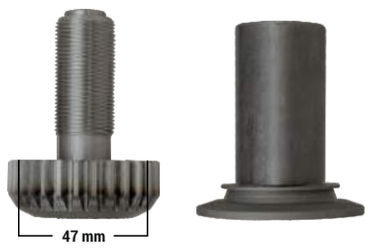

Caliper Calibration Gear	
CHEEFT NUMBER	2235
OEM NUMBER	

Caliper Actuator Seal	
CHEEFT NUMBER	2200
OEM NUMBER	MRT 68323746 - 68323746PK10 MN 35.50307.5642 - 81.50901.0015 ZF 0501322343 VLV 20706975 - 20706975 RNLT 5006 028 416 PCCR 868304

Caliper Pad Retainer Repair Kit	
CHEEFT NUMBER	2239
OEM NUMBER	MN 81.50822.0014 - 06.01771.8107 35.50307.5700 - DF 868303 - IVECO 503131342 MCK1174 - AMMCK1174 - VLV 85107958 RNLT 5001 858 719 - 5001 866 486 ZF 0501321591

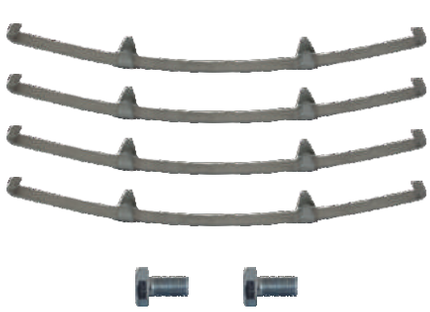

Caliper Pad Spring Kit	
CHEEFT NUMBER	2172
OEM NUMBER	MBA105 MRT

ORIGINAL PART NUMBERS,MARKS AND MODELS MENTIONED ARE ONLY FOR DESCRIPTION PURPOSES.

ELSA 2 RADIAL/AXIAL TYPE

CHEEFT NUMBER	2286

Caliper Visual Indicator

OEM NUMBER	

NR	CHEEFT NR	DESCRIPTIONS	DIMENSION	QTY
1	2780	VISUAL INDICATOR		1
2	2671	SPRING OF VISUAL INDICATOR	Ø14 x 80 mm	1

CHEEFT NUMBER	2273

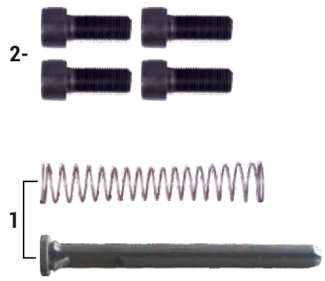

Caliper Visual Indicator & Bolt Repair Kit

OEM NUMBER	MCK1240 - RNLT 5021 177 423 MN N2509990107 - 33.50307.5665

NR	CHEEFT NR	DESCRIPTIONS	DIMENSION	QTY
1	2286	VISUAL INDICATOR		1
2	2552	BOLT	M16 x 1,5 x 40 mm	4

CHEEFT NUMBER	2267

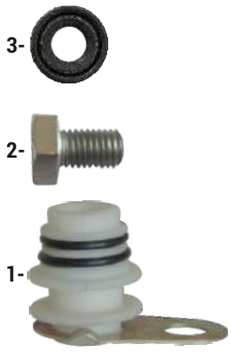

Vacuum Test Adapter Plug

OEM NUMBER	

NR	CHEEFT NR	DESCRIPTIONS	DIMENSION	QTY
1	2813	ADAPTER PLUG		1
2	2828	BOLT	M10 x 1,5 x 16 mm	1
3	2627	ADJUSTER SEAL		1

ORIGINAL PART NUMBERS,MARKS AND MODELS MENTIONED ARE ONLY FOR DESCRIPTION PURPOSES.

ELSA 2 RADIAL/AXIAL TYPE

CHEEFT NUMBER	2261

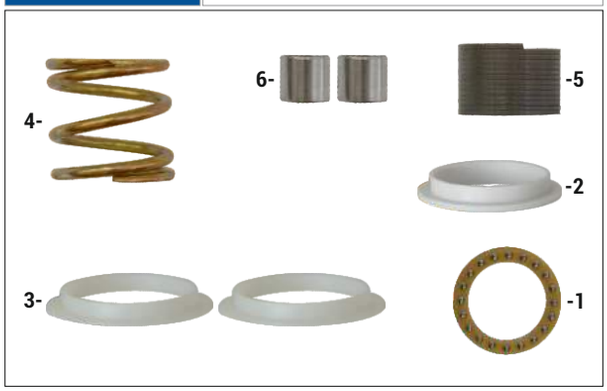

Caliper Repair Kit

OEM NUMBER	

NR	CHEEFT NR	DESCRIPTIONS	DIMENSION	QTY
1	2745	MECHANISM INNER BEARING		1
2	2747	MECHANISM INNER PLASTIC (PLAIN)		1
3	2595	MECHANISM PLAIN PLASTIC		2
4	2605	MECHANISM ROUND SPRING		1
5	2606	MECHANISM CORNERED SPRING		1
6	2607	TEFLON BUSH	Ø16 x Ø14 x 14,9 mm	2

CHEEFT NUMBER	2262

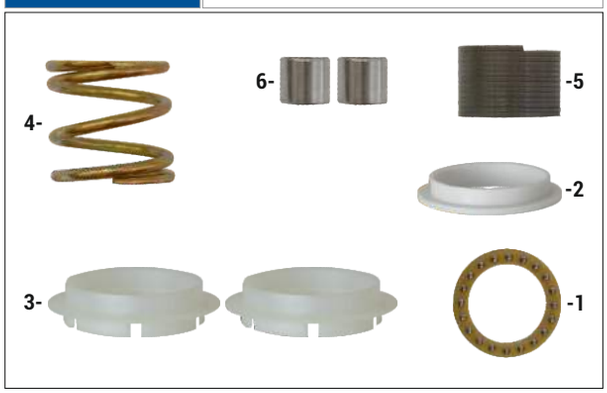

Caliper Repair Kit

OEM NUMBER	

NR	CHEEFT NR	DESCRIPTIONS	DIMENSION	QTY
1	2745	MECHANISM INNER BEARING		1
2	2747	INNER PLASTIC (PLAIN)		1
3	2589	MECHANISM JAGGED PLASTIC		2
4	2605	MECHANISM ROUND SPRING		1
5	2606	MECHANISM CORNERED SPRING		1
6	2607	TEFLON BUSH	Ø16 x Ø14 x 14,9 mm	2

ORIGINAL PART NUMBERS,MARKS AND MODELS MENTIONED ARE ONLY FOR DESCRIPTION PURPOSES.

ELSA 2 RADIAL/AXIAL TYPE

RNLT 420 SET (LEFT OLD MODEL)

CHEEFT NUMBER	CHS2001

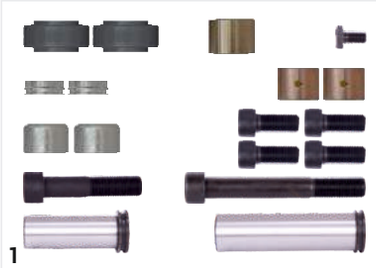
1

2

4

3

6

8

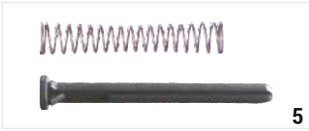
5

7

NR	CHEEFT NR	DESCRIPTIONS	QTY
1	2133	GUIDE & SEALS REPAIR KIT	1
2	2224	MECHANISM GEAR & COVER KIT	1
3	2137	ADJUSTER GEAR (LEFT)	1
4	2070	BEARING REPAIR KIT (AXIAL)	1
5	2286	VISUAL INDICATOR	1
6	2140	BEARING CAPS	1
7	2200	ACTUATOR SEAL	1
8	2209	ADJUSTER SEAL & BOOT REPAIR KIT	1

RNLT 420 SET (RIGHT OLD MODEL)

CHEEFT NUMBER	CHS2002

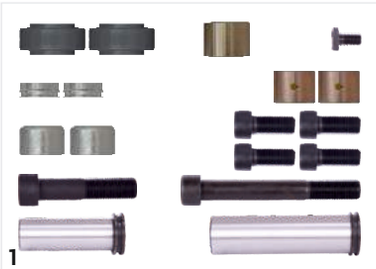
1

2

4

3

6

8

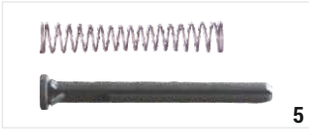
5

7

NR	CHEEFT NR	DESCRIPTIONS	QTY
1	2133	GUIDE & SEALS REPAIR KIT	1
2	2224	MECHANISM GEAR & COVER KIT	1
3	2138	ADJUSTER GEAR (RIGHT)	1
4	2070	BEARING REPAIR KIT (AXIAL)	1
5	2286	VISUAL INDICATOR	1
6	2140	BEARING CAPS	1
7	2200	ACTUATOR SEAL	1
8	2209	ADJUSTER SEAL & BOOT REPAIR KIT	1

ORIGINAL PART NUMBERS,MARKS AND MODELS MENTIONED ARE ONLY FOR DESCRIPTION PURPOSES.

ELSA 2 RADIAL/AXIAL TYPE

RNLT 420 MN TGA SET (LEFT NEW MODEL)

CHEEFT NUMBER	CHS2003

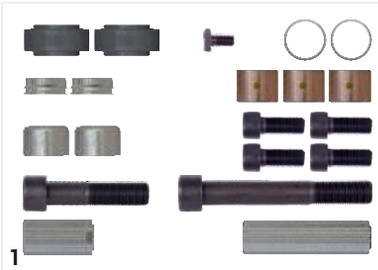
1

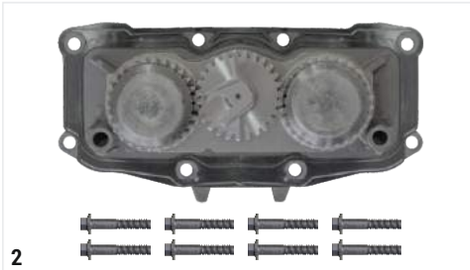
2

4

3

6

8

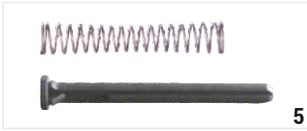
5

7

NR	CHEEFT NR	DESCRIPTIONS	QTY
1	2214	GUIDE & SEALS REPAIR KIT	1
2	2246	MECHANISM GEAR & COVER KIT	1
3	2137	ADJUSTER GEAR (LEFT)	1
4	2070	BEARING REPAIR KIT (AXIAL)	1
5	2286	VISUAL INDICATOR	1
6	2140	BEARING CAPS	1
7	2200	ACTUATOR SEAL	1
8	2209	ADJUSTER SEAL & BOOT REPAIR KIT	1

RNLT 420 MN TGA SET (RIGHT NEW MODEL)

CHEEFT NUMBER	CHS2004

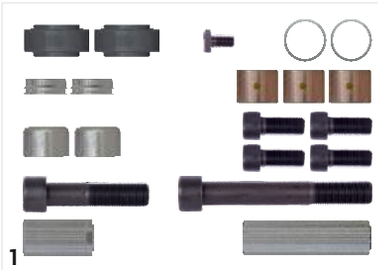
1

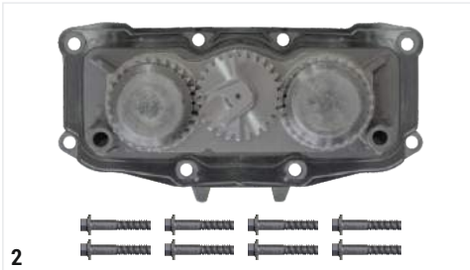
2

4

3

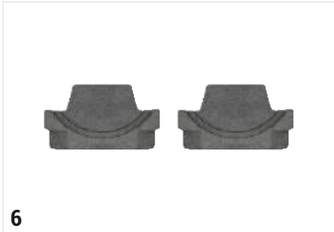
6

8

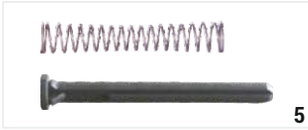
5

7

NR	CHEEFT NR	DESCRIPTIONS	QTY
1	2214	GUIDE & SEALS REPAIR KIT	1
2	2246	MECHANISM GEAR & COVER KIT	1
3	2138	ADJUSTER GEAR (RIGHT)	1
4	2070	BEARING REPAIR KIT (AXIAL)	1
5	2286	VISUAL INDICATOR	1
6	2140	BEARING CAPS	1
7	2200	ACTUATOR SEAL	1
8	2209	ADJUSTER SEAL & BOOT REPAIR KIT	1

ORIGINAL PART NUMBERS,MARKS AND MODELS MENTIONED ARE ONLY FOR DESCRIPTION PURPOSES.

MRT

C-HEEFT®
AIR DISC BRAKE CALIPER REPAIR KITS

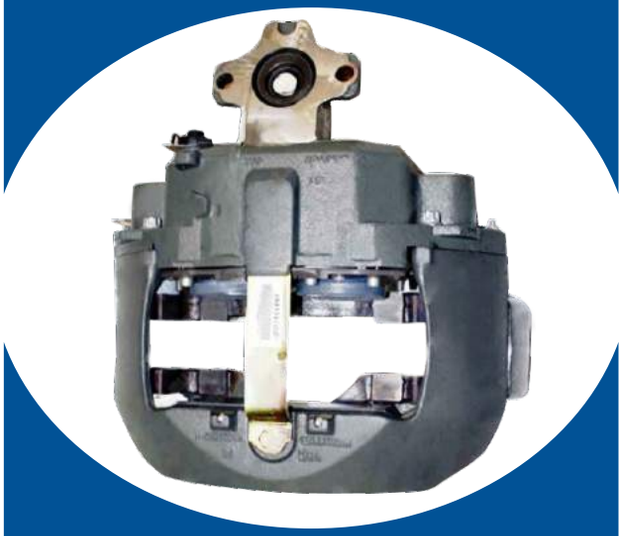

RADIAL

MRT

ELSA 195/225/EX225 RADIAL/AXIAL TYPE

Always the Best...

EAC CE

COHEEFT®

AIR DISC BRAKE CALIPER REPAIR KITS

AXIAL

MRT

ELSA 195/225/EX225 RADIAL/AXIAL TYPE

Always the Best...

EAC CE UDEM JAS-ANZ ISO 9001 2015

COHEEFT®
AIR DISC BRAKE CALIPER REPAIR KITS

MRT

ELSA 195/225/EX225 RADIAL/AXIAL TYPE

Always the Best...

EAC CE UDEM JAS-ANZ ISO 9001 2015

ELSA 195/225/EX225 RADIAL/AXIAL TYPE

CHEEFT NUMBER	2210

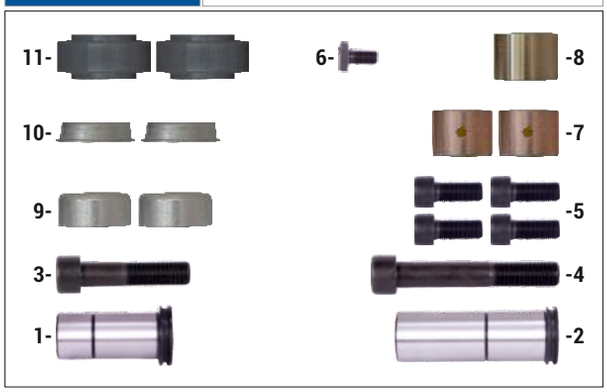

Caliper Guide & Seals Repair Kit

OEM NUMBER	

NR	CHEEFT NR	DESCRIPTIONS	DIMENSION	QTY
1	2513	GUIDE PIN	Ø30,90 x 77,5 mm	1
2	2514	GUIDE PIN	Ø35 x 117 mm	1
3	2565	BOLT	M18 x 1,5 x 82 mm	1
4	2555	BOLT	M18 x 1,5 x 120 mm	1
5	2552	BOLT	M16 x 1,5 x 40 mm	4
6	2681	BOLT	M10 x 1,25 x 20 mm	1
7	2521	PLAIN BUSH	Ø39 x Ø35 x 30 mm	2
8	2528	BRONZE OVAL BUSH	Ø42 x Ø33/31,8 x 30 mm	1
9	2548	STEEL CAP	Ø44 x 20 mm	2
10	2571	DUST EXCLUDER RETAINER	Ø40 x 11,5 mm	2
11	2582	DUST EXCLUDER		2

CHEEFT NUMBER	2247

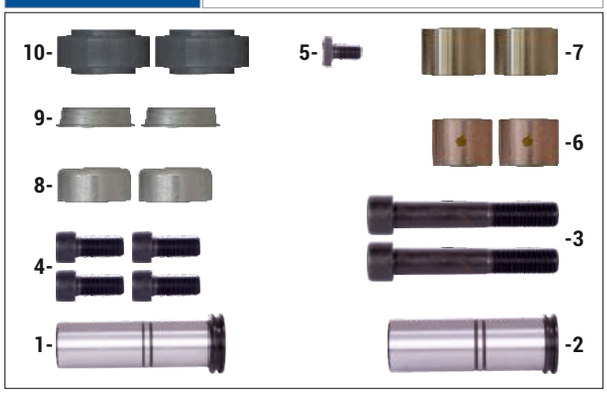

Caliper Guides & Seals Repair Kit

OEM NUMBER	MCK1317 - VLV 85109889

NR	CHEEFT NR	DESCRIPTIONS	DIMENSION	QTY
1	2517	GUIDE PIN	Ø31 x 117 mm	1
2	2518	GUIDE PIN	Ø35 x 117 mm	1
3	2555	BOLT	M18 x 1,5 x 120 mm	2
4	2552	BOLT	M16 x 1,5 x 40 mm	4
5	2681	BOLT	M10 x 1,25 x 20 mm	1
6	2521	PLAIN BUSH	Ø39 x Ø35 x 30 mm	2
7	2528	BRONZE OVAL BUSH	Ø42 x Ø33/31,8 x 30 mm	2
8	2548	STEEL CAP	Ø44 x 20 mm	2
9	2571	DUST EXCLUDER RETAINER	Ø40 x 11,5 mm	2
10	2582	DUST EXCLUDER		2

CHEEFT NUMBER	2063

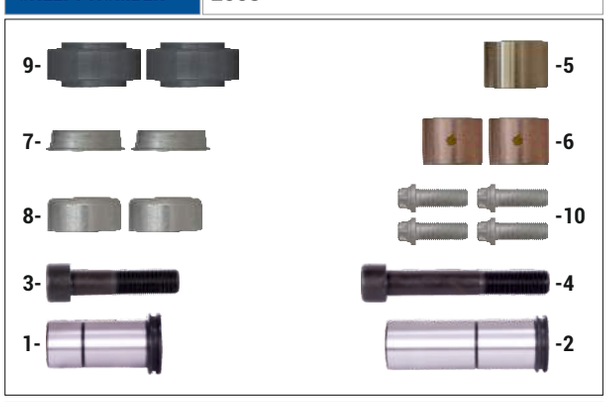

Caliper Guide & Seals Repair Kit

OEM NUMBER	MCK1254 - MN STRMCK1254 ZG070160007 - VLV AMMCK1254 PCCR 871054

NR	CHEEFT NR	DESCRIPTIONS	DIMENSION	QTY
1	2513	GUIDE PIN	Ø30,90 x 77,5 mm	1
2	2514	GUIDE PIN	Ø35 x 117 mm	1
3	2565	BOLT	M18 x 1,5 x 82 mm	1
4	2555	BOLT	M18 x 1,5 x 120 mm	1
5	2528	BRONZE OVAL BUSH	Ø42 x Ø33/Ø31,8 x 30 mm	1
6	2521	PLAIN BUSH	Ø39 x Ø 35 x 30 mm	2
7	2571	DUST EXCLUDER RETAINER	Ø40 x 11,5 mm	2
8	2548	STEEL CAP	Ø44 x 20 mm	2
9	2582	DUST EXCLUDER		2
10	2563	BOLT	M14 x 1,5 x 40 mm	4

ORIGINAL PART NUMBERS,MARKS AND MODELS MENTIONED ARE ONLY FOR DESCRIPTION PURPOSES.

ELSA 195/225/EX225 RADIAL/AXIAL TYPE

CHEEFT NUMBER	2045

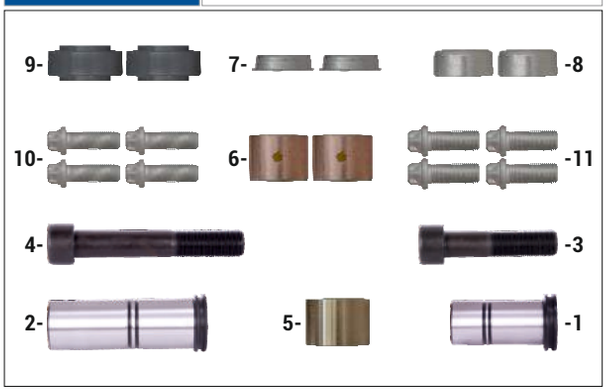

Caliper Guide Pin Repair Kit

OEM NUMBER	MCK1298 - VLV 85109890 PCCR 9500931 - RVI 5001 866 989

NR	CHEEFT NR	DESCRIPTIONS	DIMENSION	QTY
1	2569	GUIDE PIN	Ø30,90 x 77,5 mm	1
2	2518	GUIDE PIN	Ø35 x 117 mm	1
3	2565	BOLT	M18 x 1,5 x 82 mm	1
4	2555	BOLT	M18 x 1,5 x 120 mm	1
5	2528	BRONZE OVAL BUSH	Ø42 x Ø33/Ø31,8 x 30 mm	1
6	2521	PLAIN BUSH	Ø39 x Ø 35 x 30 mm	2
7	2571	DUST EXCLUDER RETAINER	Ø40 x 11,5 mm	2
8	2548	STEEL CAP	Ø44 x 20 mm	2
9	2582	DUST EXCLUDER		2
10	2563	BOLT	M14 x 1,5 x 40 mm	4
11	2564	BOLT	M16 x 1,5 x 40 mm	4

CHEEFT NUMBER	2065

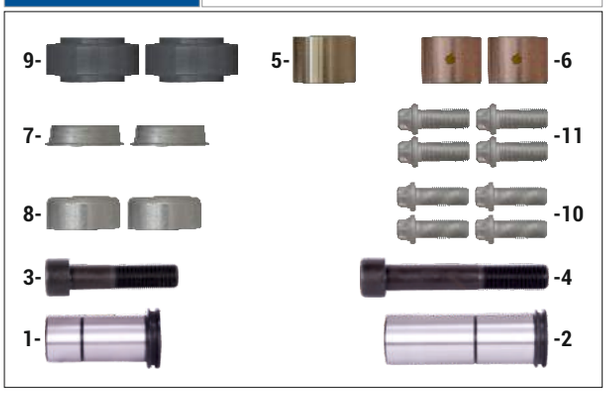

Caliper Guide & Seals Repair Kit

OEM NUMBER	MCK1298 - DF 5001 866 989 VLV 85109890 - PCCR 9500931

NR	CHEEFT NR	DESCRIPTIONS	DIMENSION	QTY
1	2513	GUIDE PIN	Ø30,90 x 77,5 mm	1
2	2514	GUIDE PIN	Ø35 x 117 mm	1
3	2565	BOLT	M18 x 1,5 x 82 mm	1
4	2555	BOLT	M18 x 1,5 x 120 mm	1
5	2528	BRONZE OVAL BUSH	Ø42 x Ø33/Ø31,8 x 30 mm	1
6	2521	PLAIN BUSH	Ø39 x Ø 35 x 30 mm	2
7	2571	DUST EXCLUDER RETAINER	Ø40 x 11,5 mm	2
8	2548	STEEL CAP	Ø44 x 20 mm	2
9	2582	DUST EXCLUDER		2
10	2563	BOLT	M14 x 1,5 x 40 mm	4
11	2564	BOLT	M16 x 1,5 x 40 mm	4

CHEEFT NUMBER	2064

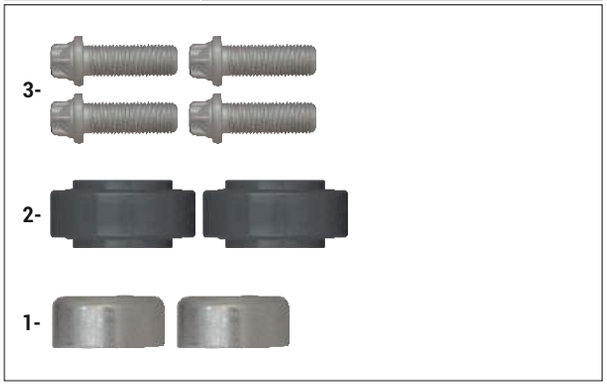

Caliper Boot & Bolts Repair Kit

OEM NUMBER	MCK1253 - MN STRMCK1253 - DF 884368 VLV AMMCK1253

NR	CHEEFT NR	DESCRIPTIONS	DIMENSION	QTY
1	2548	STEEL CAP	Ø44 x 20 mm	2
2	2582	DUST EXCLUDER		2
3	2563	BOLT	M14 x 1,5 x 40 mm	4

ORIGINAL PART NUMBERS,MARKS AND MODELS MENTIONED ARE ONLY FOR DESCRIPTION PURPOSES.

ELSA 195/225/EX225 RADIAL/AXIAL TYPE

CHEEFT NUMBER	2066

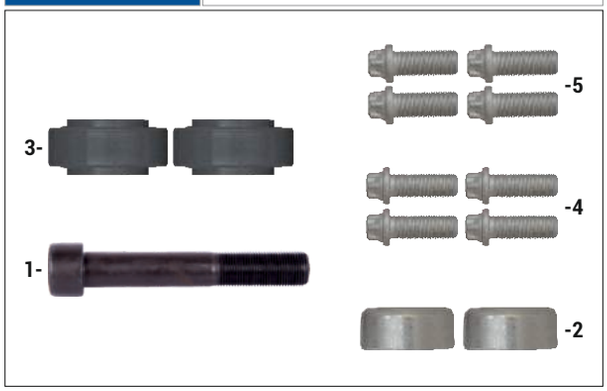

Caliper Bolts Repair Kit

OEM NUMBER	MCK1310 - VLV 85109892 RNLT 5001 866 400

NR	CHEEFT NR	DESCRIPTIONS	DIMENSION	QTY
1	2555	BOLT	M18 x 1,5 x 120 mm	1
2	2548	STEEL CAP	Ø44 x 20 mm	2
3	2582	DUST EXCLUDER		2
4	2563	BOLT	M14 x 1,5 x 40 mm	4
5	2564	BOLT	M16 x 1,5 x 40 mm	4

CHEEFT NUMBER	2274

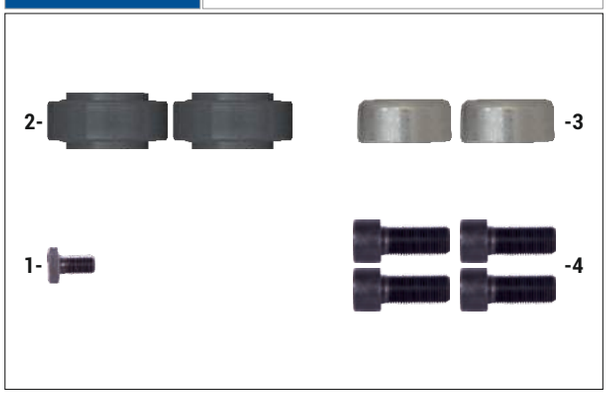

Caliper Seals & Bolts Repair Kit

OEM NUMBER	MN 35.50307.5607 - MCK1087

NR	CHEEFT NR	DESCRIPTIONS	DIMENSION	QTY
1	2681	BOLT	M10 x 1,25 x 20 mm	1
2	2582	DUST EXCLUDER		2
3	2545	STEEL CAP	Ø44 x 28 mm	2
4	2552	BOLT	M16 x 1,5 x 40 mm	4

CHEEFT NUMBER	2209

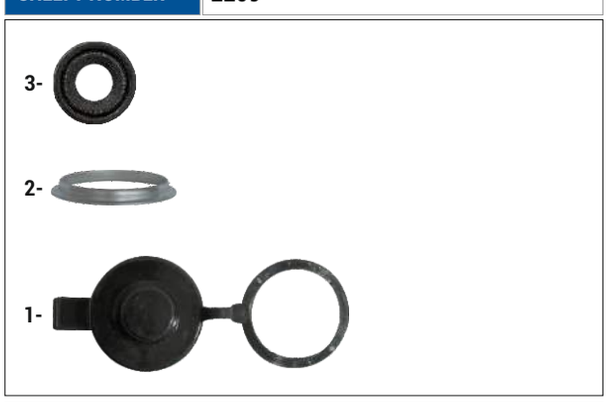

Caliper Adjuster Seal & Boot Repair Kit

OEM NUMBER	

NR	CHEEFT NR	DESCRIPTIONS	DIMENSION	QTY
1	2192	ADJUSTER DUST BOOT		1
2	2704	DUST COVER RETAINER	Ø30 x 4 mm	1
3	2627	ADJUSTER SEAL		1

ORIGINAL PART NUMBERS,MARKS AND MODELS MENTIONED ARE ONLY FOR DESCRIPTION PURPOSES.

ELSA 195/225/EX225 RADIAL/AXIAL TYPE

CHEEFT NUMBER	2142

Caliper Tappet Dust Covers

OEM NUMBER	

NR	CHEEFT NR	DESCRIPTIONS	DIMENSION	QTY
1	2585	TAPPET DUST COVER		2

CHEEFT NUMBER	2189

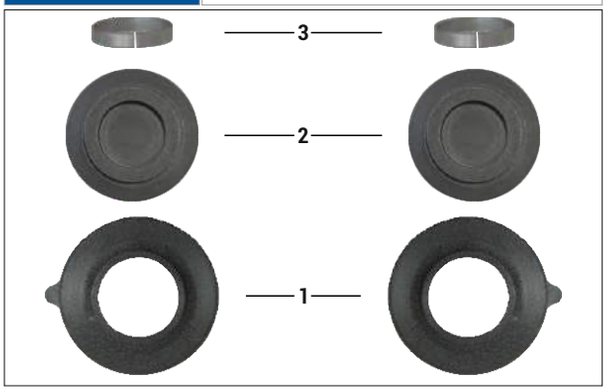

Caliper Tappet & Boot Repair Kit

OEM NUMBER	MCK1309 - VLV 85109891 RNLT 5001 866 398

NR	CHEEFT NR	DESCRIPTIONS	DIMENSION	QTY
1	2585	TAPPET DUST COVER		2
2	2612	TAPPET HEAD		2
3	2614	TAPPET HEAD RING	Ø34 x 32 x 6,5 mm	2

CHEEFT NUMBER	2272

Tappet & Boot Assembly Repair Kit

OEM NUMBER	MN N2965026008 - 35.50307.5636 MRT MCK1088

NR	CHEEFT NR	DESCRIPTIONS	DIMENSION	QTY
1	2585	TAPPET DUST COVER		2
2	2582	DUST EXCLUDER		2
3	2192	ADJUSTER DUST BOOT		1
4	2200	ACTUATOR SEAL		1

ORIGINAL PART NUMBERS,MARKS AND MODELS MENTIONED ARE ONLY FOR DESCRIPTION PURPOSES.

ELSA 195/225/EX225 RADIAL/AXIAL TYPE

CHEEFT NUMBER	2191

Caliper Seals & Bolts Repair Kit

OEM NUMBER	

NR	CHEEFT NR	DESCRIPTIONS	DIMENSION	QTY
1	2552	BOLT	M16 x 1,5 x 40 mm	4
2	2192	ADJUSTER DUST BOOT		1
3	2199	ACTUATOR SEAL		1
4	2545	STEEL CAP	Ø44 x 28 mm	2
5	2584	TAPPET DUST EXCLUDER		2
6	2582	DUST EXCLUDER		2

CHEEFT NUMBER	2182

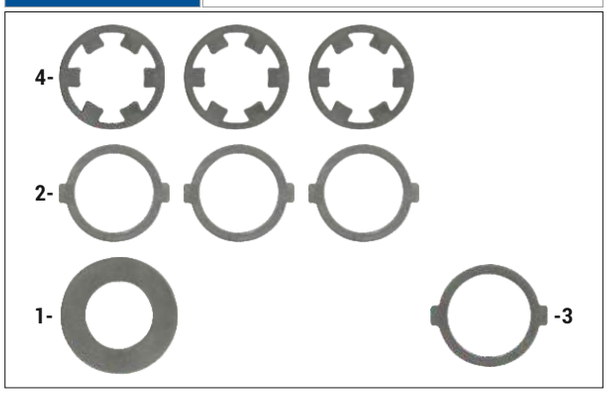

Mechanism Washer Repair Kit

OEM NUMBER	

NR	CHEEFT NR	DESCRIPTIONS	DIMENSION	QTY
1	2831	BEARING PLATE		1
2	2832	WASHER		3
3	2833	WASHER		1
4	2834	WASHER		3

CHEEFT NUMBER	2227

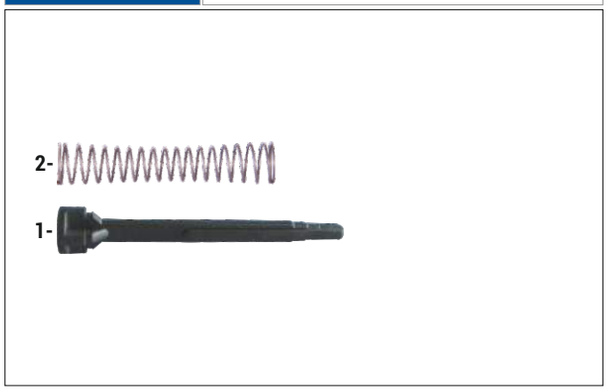

Caliper Visual Indicator

OEM NUMBER	MCK1311 - VLV 85109893 RVI 7485 109 893

NR	CHEEFT NR	DESCRIPTIONS	DIMENSION	QTY
1	2723	VISUAL INDICATOR		1
2	2671	SPRING OF VISUAL INDICATOR	Ø14 x 80 mm	1

ORIGINAL PART NUMBERS,MARKS AND MODELS MENTIONED ARE ONLY FOR DESCRIPTION PURPOSES.

ELSA 195/225/EX225 RADIAL/AXIAL TYPE

CHEEFT NUMBER	2225

Caliper Mechanism Gear & Cover Set

OEM NUMBER	

NR	CHEEFT NR	DESCRIPTIONS	DIMENSION	QTY
1	2134	ADJUSTER MECHANISM		1
2	2135	CALIBRATION GEAR		2
3	2197	CALIBRATION MECHANISM COVER		1
4	2142	TAPPET DUST COVERS		1

CHEEFT NUMBER	2197

Calibration Mechanism Cover (Aluminium)

OEM NUMBER	68325646

NR	CHEEFT NR	DESCRIPTIONS	DIMENSION	QTY
1	2561	BOLT	M8 x 45 mm	8
2	2623	COVER GASKET		1
3	2730	ALUMINIUM COVER		1

CHEEFT NUMBER	2139

Aluminium Cover Bush & Seal Kit

OEM NUMBER	

NR	CHEEFT NR	DESCRIPTIONS	DIMENSION	QTY
1	2534	TEFLON BUSH		2
2	2580	DUST EXCLUDER RETAINER		2
3	2638	MECHANISM SEAL		2

ORIGINAL PART NUMBERS,MARKS AND MODELS MENTIONED ARE ONLY FOR DESCRIPTION PURPOSES.

ELSA 195/225/EX225 RADIAL/AXIAL TYPE

CHEEFT NUMBER	2262

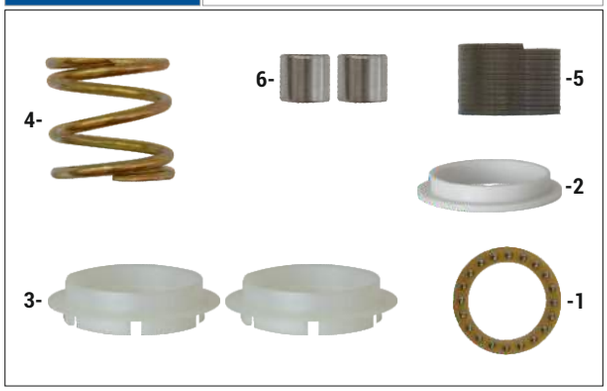

NR	CHEEFT NR	DESCRIPTIONS	DIMENSION	QTY
1	2745	MECHANISM INNER BEARING		1
2	2747	INNER PLASTIC (PLAIN)		1
3	2589	MECHANISM JAGGED PLASTIC		2
4	2605	MECHANISM ROUND SPRING		1
5	2606	MECHANISM CORNERED SPRING		1
6	2607	TEFLON BUSH	Ø16 x Ø14 x 14,9 mm	2

Caliper Repair Kit

OEM NUMBER	

Caliper Adjuster Mechanism

CHEEFT NUMBER	2134
OEM NUMBER	

Caliper Calibration Gear

CHEEFT NUMBER	2135
OEM NUMBER	

ORIGINAL PART NUMBERS,MARKS AND MODELS MENTIONED ARE ONLY FOR DESCRIPTION PURPOSES.

ELSA 195/225/EX225 RADIAL/AXIAL TYPE

CHEEFT NUMBER	2257

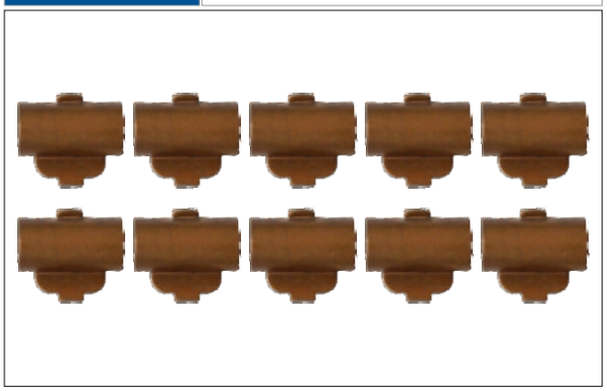

Caliper Lever Bushes Kit

OEM NUMBER	

NR	CHEEFT NR	DESCRIPTIONS	DIMENSION	QTY
1	2711	LEVER BUSH		10

CHEEFT NUMBER	2032

Caliper Bearing Repair Kit (EX225 Radial)

OEM NUMBER	

NR	CHEEFT NR	DESCRIPTIONS	DIMENSION	QTY
1	2071	ROLLER BEARINGS		1
2	2711	LEVER BUSH		2
3	2634	ROLLER		2

CHEEFT NUMBER	2033

Caliper Lever Repair Kit (EX225 Radial)

OEM NUMBER	

NR	CHEEFT NR	DESCRIPTIONS	DIMENSION	QTY
1	2251	CALIPER LEVER		1
2	2032	CALIPER BEARING REPAIR KIT		1

ORIGINAL PART NUMBERS,MARKS AND MODELS MENTIONED ARE ONLY FOR DESCRIPTION PURPOSES.

ELSA 195/225/EX225 RADIAL/AXIAL TYPE

CHEEFT NUMBER	2255

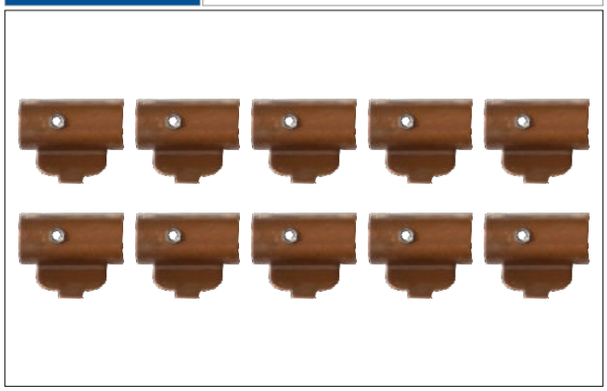

Caliper Lever Bushes Kit

OEM NUMBER	

NR	CHEEFT NR	DESCRIPTIONS	DIMENSION	QTY
1	2633	LEVER BUSH		10

CHEEFT NUMBER	2070

Caliper Bearing Repair Kit (Axial)

OEM NUMBER	DF 1522169 - SJ4112 - VLV 3092329

NR	CHEEFT NR	DESCRIPTIONS	DIMENSION	QTY
1	2071	ROLLER BEARINGS		1
2	2633	LEVER BUSH		2
3	2634	ROLLER		2

CHEEFT NUMBER	2039

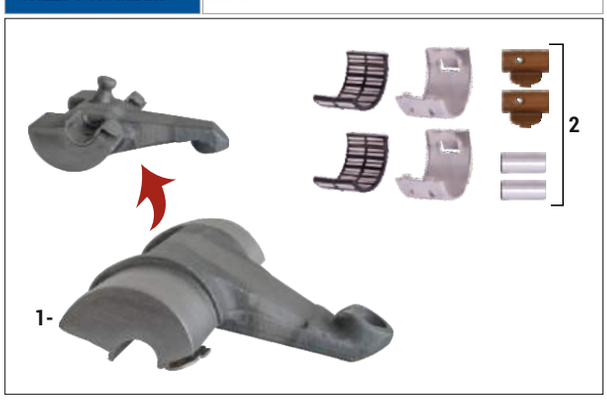

Caliper Lever Repair Kit (Length 114 mm)

OEM NUMBER	

NR	CHEEFT NR	DESCRIPTIONS	DIMENSION	QTY
1	2207	CALIPER LEVER (LENGTH 114 mm)		1
2	2070	CALIPER BEARING REPAIR KIT		1

ORIGINAL PART NUMBERS,MARKS AND MODELS MENTIONED ARE ONLY FOR DESCRIPTION PURPOSES.

ELSA 195/225/EX225 RADIAL/AXIAL TYPE

CHEEFT NUMBER	2038

Caliper Lever Repair Kit

OEM NUMBER	

NR	CHEEFT NR	DESCRIPTIONS	DIMENSION	QTY
1	2258	CALIPER LEVER		1
2	2070	CALIPER BEARING REPAIR KIT		1

CHEEFT NUMBER	2267

Vacuum Test Adapter Plug

OEM NUMBER	

NR	CHEEFT NR	DESCRIPTIONS	DIMENSION	QTY
1	2813	ADAPTER PLUG		1
2	2828	BOLT	M10 x 1,5 x 16 mm	1
3	2627	ADJUSTER SEAL		1

Caliper Roller Bearings

CHEEFT NUMBER	2071
OEM NUMBER	

ORIGINAL PART NUMBERS,MARKS AND MODELS MENTIONED ARE ONLY FOR DESCRIPTION PURPOSES.

ELSA 195/225/EX225 RADIAL/AXIAL TYPE

Caliper Lever (SCN)	
CHEEFT NUMBER	2159
OEM NUMBER	

Caliper Adjuster Gear	
CHEEFT NUMBER	2188
OEM NUMBER	

Caliper Adjuster Gear	
CHEEFT NUMBER	2068
OEM NUMBER	

Caliper Adjuster Dust Boot	
CHEEFT NUMBER	2192
OEM NUMBER	MRT 68322655 - 68322655PK10 MN 81.50810.0005 PCCR 1489071 VLV 3092282 - AM68322655 RNLT 5006 028 417

Caliper Actuator Seal	
CHEEFT NUMBER	2200
OEM NUMBER	MRT 68323746 - 68323746PK10 MN 35.50307.5642 - 81.50901.0015 ZF 0501322343 VLV 20706975 - 20706975 RNLT 5006 028 416 PCCR 868304

ORIGINAL PART NUMBERS,MARKS AND MODELS MENTIONED ARE ONLY FOR DESCRIPTION PURPOSES.

ELSA 195/225/EX225 RADIAL/AXIAL TYPE

Caliper Pad Retainer Repair Kit

CHEEFT NUMBER	2239
OEM NUMBER	MN 81.50822.0014 - 06.01771.8107 35.50307.5700 - DF 868303 - IVECO 503131342 MCK1174 - AMMCK1174 - VLV 85107958 RNLT 5001 858 719 - 5001 866 486 ZF 0501321591

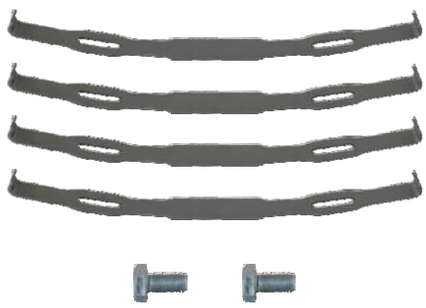

Caliper Pad Spring Kit

CHEEFT NUMBER	2160
OEM NUMBER	MBA112 - VLV 85109894

Caliper Bearing Caps

CHEEFT NUMBER	2140
OEM NUMBER	

Caliper Actuator Seal

CHEEFT NUMBER	2199
OEM NUMBER	

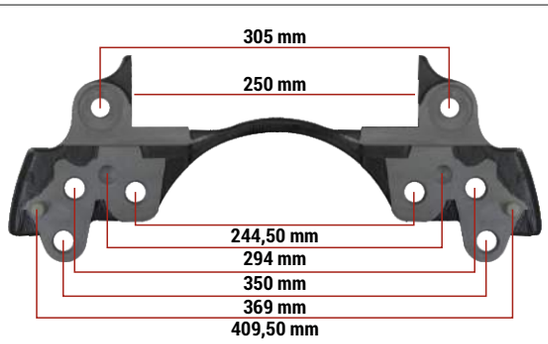

ELSA 195/225/EX225 22,5 Inch VLV Carrier (Right-Left)

CHEEFT NUMBER	2319
OEM NUMBER	68325303 - MCK1297 - MCK1322 VLV 85109886 - RNLT 5001 866 384 ELSA 225 VLV (WITH PIN)

ORIGINAL PART NUMBERS,MARKS AND MODELS MENTIONED ARE ONLY FOR DESCRIPTION PURPOSES.

ELSA 195/225/EX225 RADIAL/AXIAL TYPE

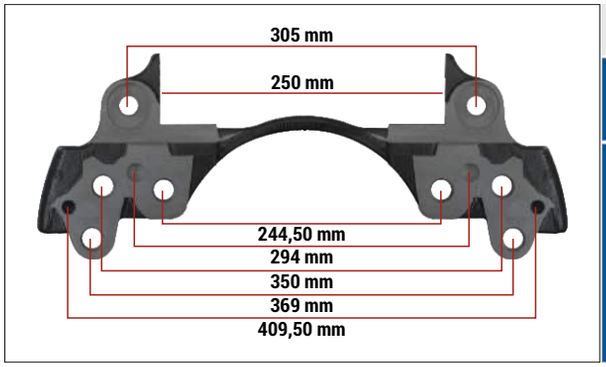

RNLT 440 22,5 Inch Carrier (Right-Left)	
CHEEFT NUMBER	2321
OEM NUMBER	MRT MCK1297 - MCK1322 - VLV 85109886 RNLT 5001 866 384

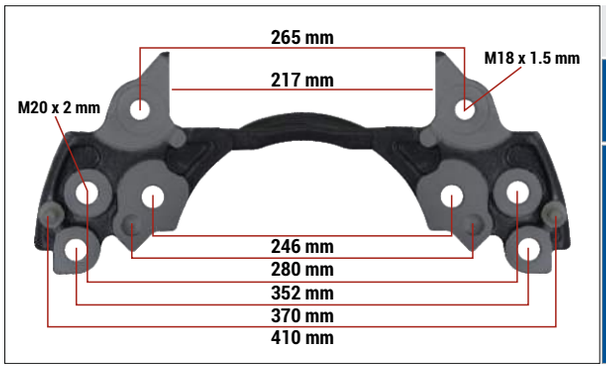

Caliper Carrier VLV	
CHEEFT NUMBER	2325
OEM NUMBER	MRT MCK1319 - VLV 85109887 RNLT 5001866988

ORIGINAL PART NUMBERS,MARKS AND MODELS MENTIONED ARE ONLY FOR DESCRIPTION PURPOSES.

ELSA 195/225/EX225 RADIAL/AXIAL TYPE

RNLT 440 MN SET (ELSA 195/225 RADIAL-AXIAL / LEFT-RIGHT)

CHEEFT NUMBER	CHS2005

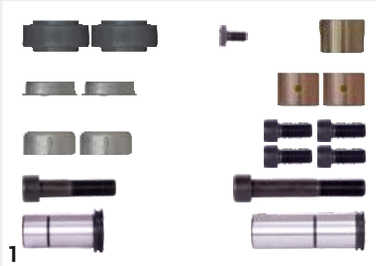
1

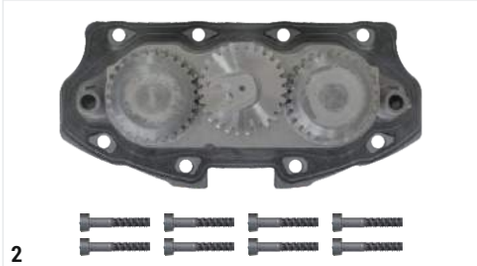
2

4

3

6

8

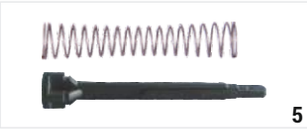
5

7

NR	CHEEFT NR	DESCRIPTIONS	QTY
1	2210	GUIDE & SEALS REPAIR KIT	1
2	2225	MECHANISM GEAR & COVER KIT	1
3	2188	ADJUSTER GEAR	1
4	2070	BEARING REPAIR KIT (AXIAL)	1
5	2227	VISUAL INDICATOR	1
6	2140	BEARING CAPS	1
7	2200	ACTUATOR SEAL	1
8	2209	ADJUSTER SEAL & BOOT REPAIR KIT	1

VLV SET NEW MODEL (ELSA 195/225 RADIAL-AXIAL LEFT-RIGHT)

CHEEFT NUMBER	CHS2036

1

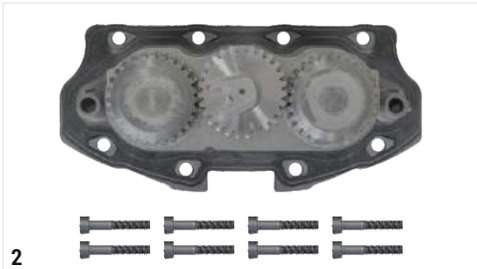
2

4

3

6

8

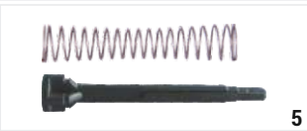
5

7

NR	CHEEFT NR	DESCRIPTIONS	QTY
1	2247	GUIDE & SEALS REPAIR KIT	1
2	2225	MECHANISM GEAR & COVER KIT	1
3	2188	ADJUSTER GEAR	1
4	2070	BEARING REPAIR KIT (AXIAL)	1
5	2227	VISUAL INDICATOR	1
6	2140	BEARING CAPS	1
7	2200	ACTUATOR SEAL	1
8	2209	ADJUSTER SEAL & BOOT REPAIR KIT	1

ORIGINAL PART NUMBERS,MARKS AND MODELS MENTIONED ARE ONLY FOR DESCRIPTION PURPOSES.

COHEEFT®
AIR DISC BRAKE CALIPER REPAIR KITS

MRT

CARRIERS

Always the Best...

EAC CE UDEM JAS-ANZ ISO 9001 2015

CARRIERS

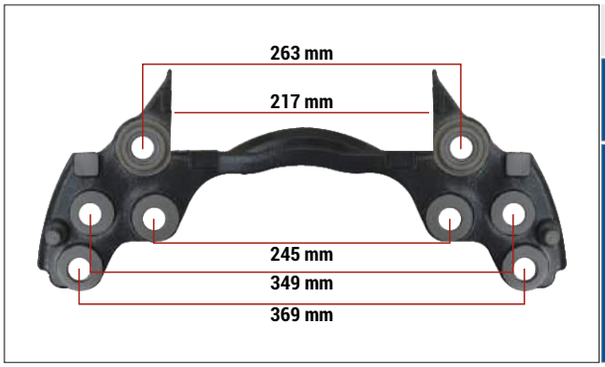

DUCO TYPE 19,5 Inch Caliper Carrier (Right-Left)

CHEEFT NUMBER	2315
OEM NUMBER	MRT 68323539

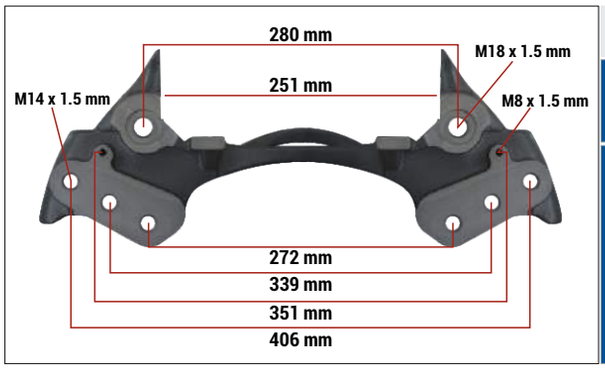

D3 TYPE 22,5 Inch Caliper Carrier

CHEEFT NUMBER	2316
OEM NUMBER	MRT BDA443

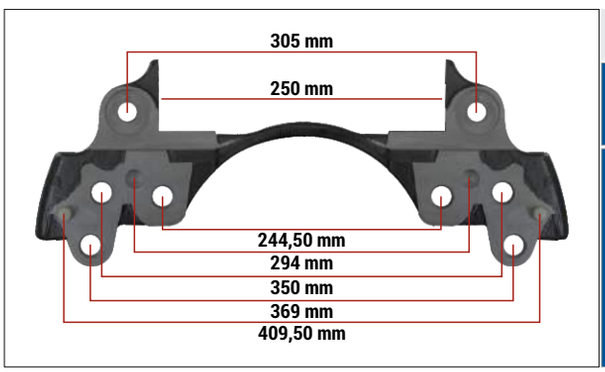

ELSA 195/225/EX225 22,5 Inch VLV Carrier (Right-Left)

CHEEFT NUMBER	2319
OEM NUMBER	68325303 - MCK1297 - MCK1322 VLV 85109886 - RNLT 5001 866 384 ELSA 225 VLV (WITH PIN)

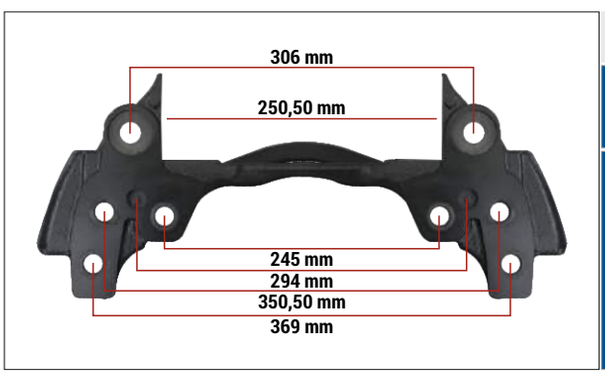

ELSA 2 22,5 Inch RNLT 420 Carrier (Right-Left)

CHEEFT NUMBER	2320
OEM NUMBER	68323673 - 68323675 - 68323676 MN 35.50307.5526 ELSA 2 RNLT 420

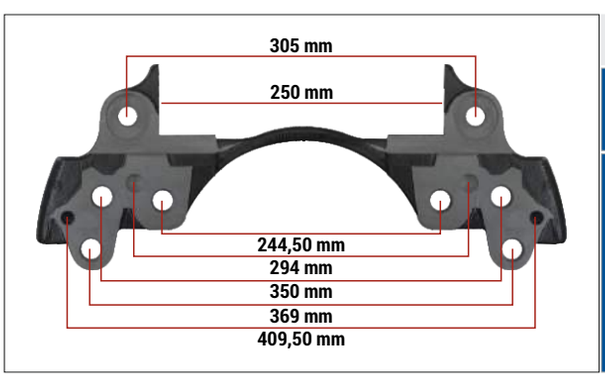

RNLT 440 22,5 Inch Carrier (Right-Left)

CHEEFT NUMBER	2321
OEM NUMBER	MRT MCK1297 - MCK1322 - VLV 85109886 RNLT 5001 866 384

ORIGINAL PART NUMBERS,MARKS AND MODELS MENTIONED ARE ONLY FOR DESCRIPTION PURPOSES.

CARRIERS

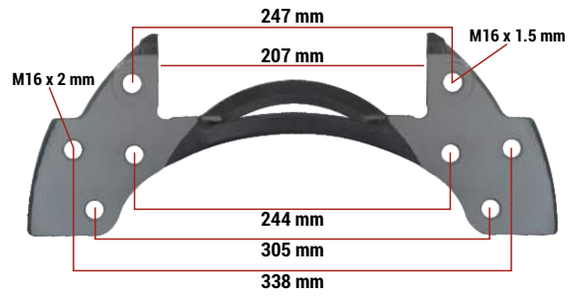

DX 195 Carrier (Right-Left)

CHEEFT NUMBER	2322
OEM NUMBER	MRT MCK1185

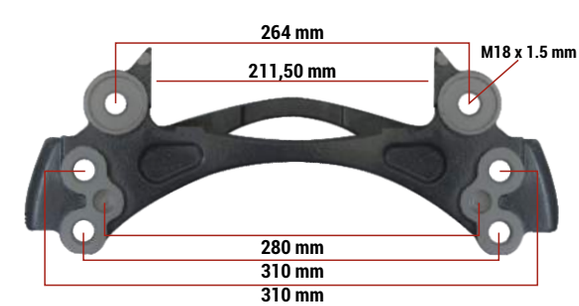

MRT 19,5 Inch Caliper Carrier For Ror AXL

CHEEFT NUMBER	2323
OEM NUMBER	DF 883186 MRT MCK1252

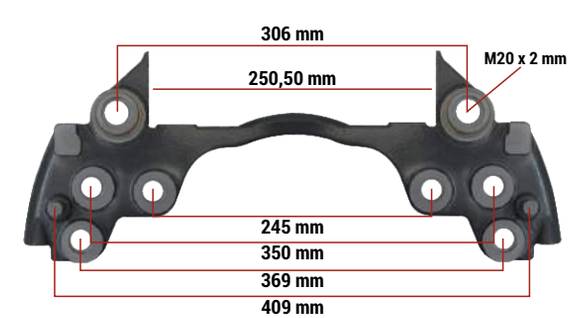

D DUCO TYPE 22,5 Inch Caliper Carrier (Right-Left)

CHEEFT NUMBER	2324
OEM NUMBER	68322778 - DF 1489072 - VLV 3092253

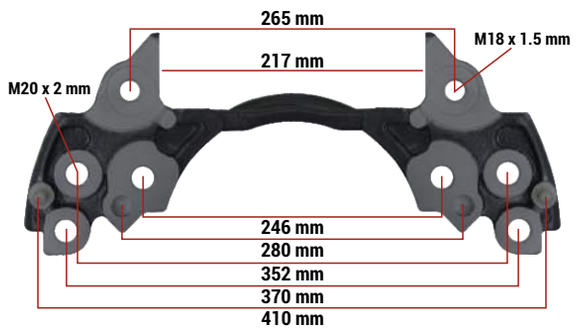

Caliper Carrier VLV

CHEEFT NUMBER	2325
OEM NUMBER	MRT MCK1319 - VLV 85109887 RNLT 5001866988

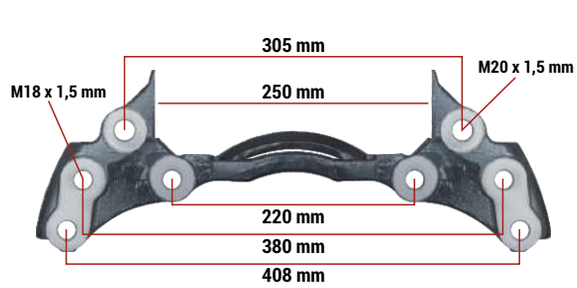

Caliper Carrier For 463-464 MN

CHEEFT NUMBER	2326
OEM NUMBER	MRT BDA445 - MN 81508026015 RNLT 5001019718 - ZF 0501211882

ORIGINAL PART NUMBERS,MARKS AND MODELS MENTIONED ARE ONLY FOR DESCRIPTION PURPOSES.

CARRIERS

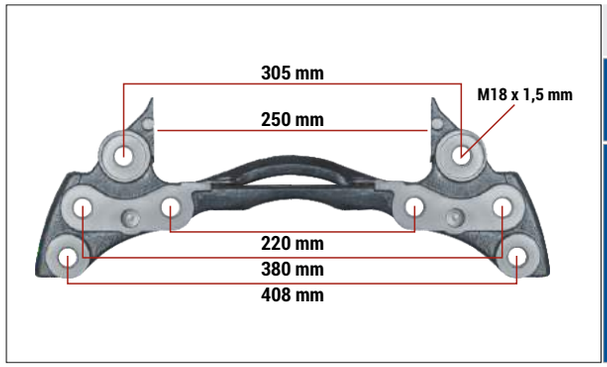

Caliper Carrier For ROR Axle

CHEEFT NUMBER	2327
OEM NUMBER	

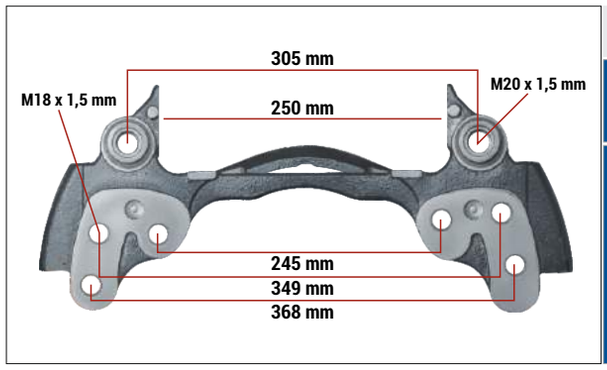

Caliper Carrier For RNLT 380-400 Trucks

CHEEFT NUMBER	2328
OEM NUMBER	

ORIGINAL PART NUMBERS,MARKS AND MODELS MENTIONED ARE ONLY FOR DESCRIPTION PURPOSES.

COHEEFT®
AIR DISC BRAKE CALIPER REPAIR KITS

MRT

CABLES

Always the Best...

EAC CE UDEM JAS-ANZ ISO 9001 2015

CABLES

Pad Wear Indicator (Front-Right)	
CHEEFT NUMBER	2402
OEM NUMBER	RNLT 5001 856 032

Pad Wear Indicator (Rear-Right)	
CHEEFT NUMBER	2403
OEM NUMBER	RNLT 5001 856 034

Pad Wear Indicator (Front-Left)	
CHEEFT NUMBER	2404
OEM NUMBER	RNLT 5001 856 031

Pad Wear Indicator (Rear-Left)	
CHEEFT NUMBER	2405
OEM NUMBER	RNLT 5001 856 033

Pad Wear Indicator (Front-Right)	
CHEEFT NUMBER	2406
OEM NUMBER	RNLT 7420 928 560

ORIGINAL PART NUMBERS,MARKS AND MODELS MENTIONED ARE ONLY FOR DESCRIPTION PURPOSES.

CABLES

Pad Wear Indicator (Rear-Right)	
CHEEFT NUMBER	2407
OEM NUMBER	RNLT 7420 928 553

Pad Wear Indicator (Front-Left)	
CHEEFT NUMBER	2408
OEM NUMBER	RNLT 7420 928 559

Pad Wear Indicator (Rear-Left)	
CHEEFT NUMBER	2409
OEM NUMBER	RNLT 7420 928 552

Pad Wear Indicator (Front)	
CHEEFT NUMBER	2410
OEM NUMBER	VLV 20928533

Pad Wear Indicator (Rear)	
CHEEFT NUMBER	2411
OEM NUMBER	VLV 20928532

ORIGINAL PART NUMBERS,MARKS AND MODELS MENTIONED ARE ONLY FOR DESCRIPTION PURPOSES.

CABLES

Pad Wear Indicator (Front-Left/Right)

CHEEFT NUMBER	2412
OEM NUMBER	MN 81.25937.6015

Pad Wear Indicator (Rear-Left)

CHEEFT NUMBER	2413
OEM NUMBER	MN 81.25937.6041

Pad Wear Indicator (Rear-Right)

CHEEFT NUMBER	2414
OEM NUMBER	MN 81.25937.6044

Pad Wear Indicator

CHEEFT NUMBER	2416
OEM NUMBER	VLV 21390374

Pad Wear Indicator

CHEEFT NUMBER	2417
OEM NUMBER	VLV 21390375

ORIGINAL PART NUMBERS,MARKS AND MODELS MENTIONED ARE ONLY FOR DESCRIPTION PURPOSES.

CABLES

Pad Wear Indicator	
CHEEFT NUMBER	2418
OEM NUMBER	

Pad Wear Indicator	
CHEEFT NUMBER	2419
OEM NUMBER	VLV 21390372 - 20928356

Pad Wear Indicator	
CHEEFT NUMBER	2420
OEM NUMBER	VLV 21390373 - 20928537

Pad Wear Indicator	
CHEEFT NUMBER	2422
OEM NUMBER	VLV 20928548

Pad Wear Indicator	
CHEEFT NUMBER	2423
OEM NUMBER	VLV 20928563

ORIGINAL PART NUMBERS,MARKS AND MODELS MENTIONED ARE ONLY FOR DESCRIPTION PURPOSES.

CABLES

Pad Wear Indicator	
CHEEFT NUMBER	2424
OEM NUMBER	VLV 20928564

ORIGINAL PART NUMBERS,MARKS AND MODELS MENTIONED ARE ONLY FOR DESCRIPTION PURPOSES.

COHEEFT®
AIR DISC BRAKE CALIPER REPAIR KITS

MRT

SETS

Always the Best...

EAC CE UDEM JAS-ANZ ISO 9001 2015

SETS

VLV SET (RIGHT)

CHEEFT NUMBER	CHS2012

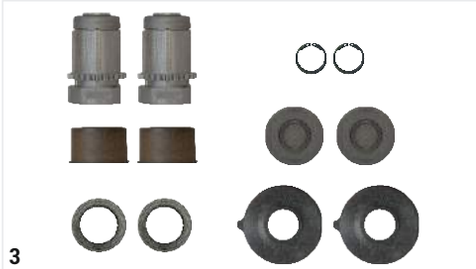

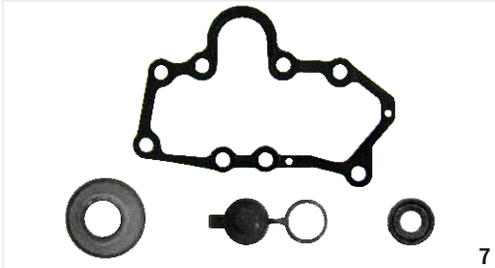

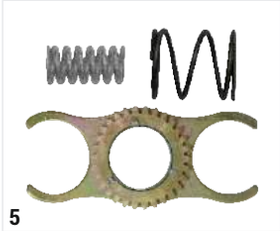

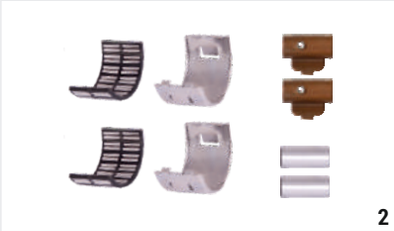

NR	CHEEFT NR	DESCRIPTIONS	QTY
1	2109	GUIDES & SEALS REPAIR KIT	1
2	2070	BEARING REPAIR KIT (AXIAL)	1
3	2114	ADJUSTER TAPPET REPAIR KIT (RIGHT)	1
4	2118	AUTOMATIC ADJUSTER (RIGHT)	1
5	2115	GEAR & SPRINGS REPAIR KIT	1
6	2123	TAPPET ANTI-ROTATION PLATE	1
7	2125	COVER SEAL REPAIR KIT	1
8	2226	VISUAL INDICATOR	1

VLV SET (LEFT)

CHEEFT NUMBER	CHS2013

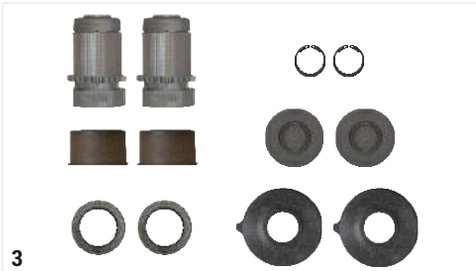

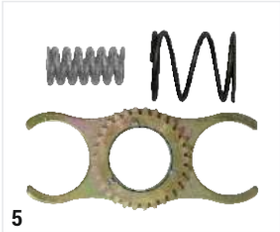

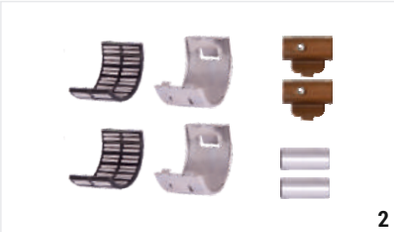

NR	CHEEFT NR	DESCRIPTIONS	QTY
1	2109	GUIDES & SEALS REPAIR KIT	1
2	2070	BEARING REPAIR KIT (AXIAL)	1
3	2113	ADJUSTER TAPPET REPAIR KIT (LEFT)	1
4	2119	AUTOMATIC ADJUSTER (LEFT)	1
5	2115	GEAR & SPRINGS REPAIR KIT	1
6	2123	TAPPET ANTI-ROTATION PLATE	1
7	2125	COVER SEAL REPAIR KIT	1
8	2226	VISUAL INDICATOR	1

ORIGINAL PART NUMBERS,MARKS AND MODELS MENTIONED ARE ONLY FOR DESCRIPTION PURPOSES.

SETS

VLV SET RADIAL FRONT (LEFT-RIGHT)

CHEEFT NUMBER CHS2014

1

3

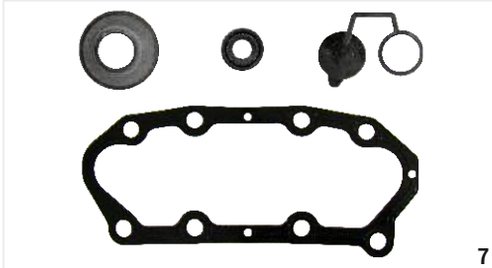
7

4

5

6

8

2

NR	CHEEFT NR	DESCRIPTIONS	QTY
1	2108	GUIDES & SEALS REPAIR KIT	1
2	2204	BEARING REPAIR KIT (RADIAL)	1
3	2114	ADJUSTER TAPPET REPAIR KIT (RIGHT)	1
4	2118	AUTOMATIC ADJUSTER (RIGHT)	1
5	2115	GEAR & SPRINGS REPAIR KIT	1
6	2123	TAPPET ANTI-ROTATION PLATE	1
7	2124	COVER SEAL REPAIR KIT	1
8	2226	VISUAL INDICATOR	1

C-LE DUCO SET (RIGHT)

CHEEFT NUMBER CHS2033

1

2

4

3

5

7

6

8

9

NR	CHEEFT NR	DESCRIPTIONS	QTY
1	2109	GUIDES & SEALS REPAIR KIT	1
2	2114	ADJUSTER TAPPET REPAIR KIT (RIGHT)	1
3	2118	AUTOMATIC ADJUSTER (RIGHT)	1
4	2260	LEVER REPAIR KIT (RIGHT)	1
5	2155	TAPPET ANTI ROTATION PLATE	1
6	2156	GEAR & SPRING REPAIR KIT	1
7	2126	COVER PLATE SEAL REPAIR KIT	1
8	2226	VISUAL INDICATOR	1
9	2249	GEAR MECHANISM (RIGHT)	1

ORIGINAL PART NUMBERS,MARKS AND MODELS MENTIONED ARE ONLY FOR DESCRIPTION PURPOSES.

SETS

C-LE DUCO SET (LEFT)

CHEEFT NUMBER	CHS2032

NR	CHEEFT NR	DESCRIPTIONS	QTY
1	2109	GUIDES & SEALS REPAIR KIT	1
2	2113	ADJUSTER TAPPET REPAIR KIT (LEFT)	1
3	2119	AUTOMATIC ADJUSTER (LEFT)	1
4	2259	LEVER REPAIR KIT (LEFT)	1
5	2155	TAPPET ANTI ROTATION PLATE	1
6	2156	GEAR & SPRING REPAIR KIT	1
7	2126	COVER GASKET	1
8	2226	VISUAL INDICATOR	1
9	2250	GEAR MECHANISM (LEFT)	1

B DUCO SET (RIGHT-LEFT)

CHEEFT NUMBER	CHS2031

NR	CHEEFT NR	DESCRIPTIONS	QTY
1	2109	GUIDES & SEALS REPAIR KIT	1
2	2114	ADJUSTER TAPPET REPAIR KIT	1
3	2154	ADJUSTER MECHANISM	1
4	2153	LEVER REPAIR KIT	1
5	2163	ADJUSTER DUST BOOT	1
6	2226	VISUAL INDICATOR	1

ORIGINAL PART NUMBERS,MARKS AND MODELS MENTIONED ARE ONLY FOR DESCRIPTION PURPOSES.

SETS

C LISA REPAIR SET (RIGHT)

CHEEFT NUMBER CHS2029

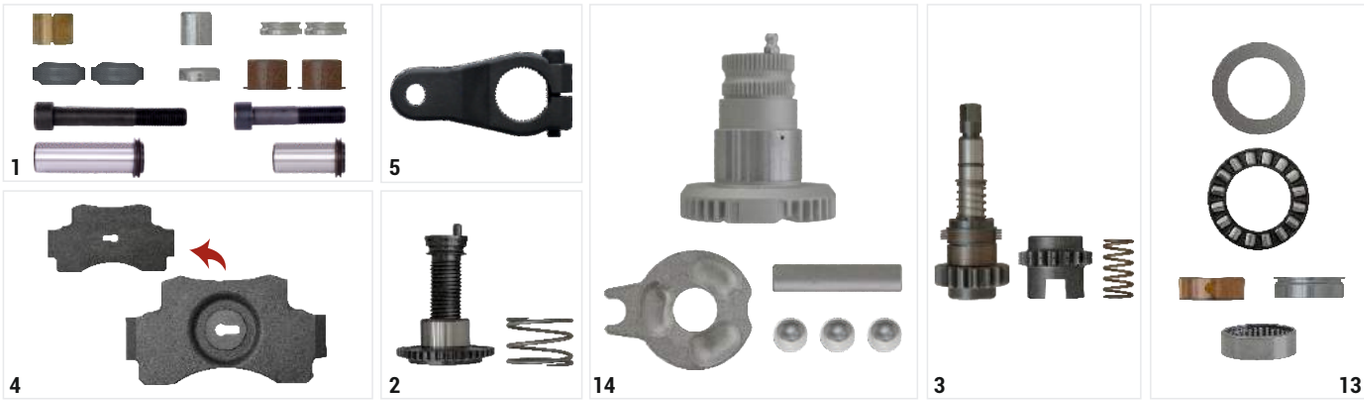

NR	CHEEFT NR	DESCRIPTIONS	QTY
1	2051	GUIDES & SEALS REPAIR KIT	1
2	2130	ADJUSTER GEAR (RIGHT)	1
3	2132	ADJUSTING MECHANISM (RIGHT)	1
4	2150	PUSH PLATE	1
5	2151	SHAFT LEVER	1
6	2620	COVER GASKET	1
7	2617	SHAFT INNER SEAL Ø52 / Ø39 mm	1
8	2619	SEAL COVER Ø62 x Ø42 x 6 mm	1
9	2618	SHAFT OUTER SEAL Ø57 / Ø40 mm	1
10	2621	DUST PLUG	1

NR	CHEEFT NR	DESCRIPTIONS	QTY
11	2622	O-RING	1
12	2586	TAPPET DUST EXCLUDER	1
13	2196	BUSH & BEARING KIT	1
14	2223	SHAFT REPAIR KIT (RIGHT)	1

C LISA REPAIR SET (LEFT)

CHEEFT NUMBER CHS2030

NR	CHEEFT NR	DESCRIPTIONS	QTY
1	2051	GUIDES & SEALS REPAIR KIT	1
2	2129	ADJUSTER GEAR (LEFT)	1
3	2131	ADJUSTING MECHANISM (LEFT)	1
4	2150	PUSH PLATE	1
5	2151	SHAFT LEVER	1
6	2620	COVER GASKET	1
7	2617	SHAFT INNER SEAL Ø57 / Ø39 mm	1
8	2619	SEAL COVER Ø62 x Ø42 x 6 mm	1
9	2618	SHAFT OUTER SEAL Ø57 / Ø40 mm	1
10	2621	DUST PLUG	1

NR	CHEEFT NR	DESCRIPTIONS	QTY
11	2622	O-RING	1
12	2586	TAPPET DUST EXCLUDER	1
13	2196	BUSH & BEARING KIT	1
14	2222	SHAFT REPAIR KIT (LEFT)	1

ORIGINAL PART NUMBERS,MARKS AND MODELS MENTIONED ARE ONLY FOR DESCRIPTION PURPOSES.

SETS

RNLT 370-390-400 SET (LEFT)

CHEEFT NUMBER	CHS2006

1

14

12

4

5

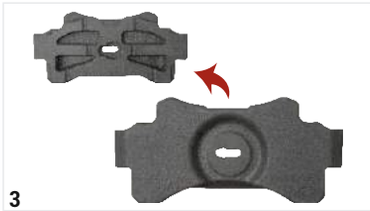
3

2

11

13

8

7

6

9

10

NR	CHEEFT NR	DESCRIPTIONS	QTY
1	2128	GUIDES & SEALS REPAIR KIT	1
2	2129	ADJUSTER GEAR (LEFT)	1
3	2190	CALIPER PUSH PLATE	1
4	2131	ADJUSTING MECHANISM (LEFT)	1
5	2196	BUSH & BEARING KIT	1
6	2618	SHAFT OUTER SEAL Ø57 / Ø40 mm	1
7	2619	SEAL COVER Ø62 / Ø42 x 6 mm	1
8	2617	SHAFT INNER SEAL Ø52 / Ø39 mm	1
9	2621	DUST PLUG	1
10	2622	O-RING	1

NR	CHEEFT NR	DESCRIPTIONS	QTY
11	2620	COVER GASKET	1
12	2222	SHAFT REPAIR KIT (LEFT)	1
13	2586	TAPPET DUST EXCLUDER	1
14	2151	SHAFT LEVER	1

RNLT 370-390-400 SET (RIGHT)

CHEEFT NUMBER	CHS2007

1

14

12

4

5

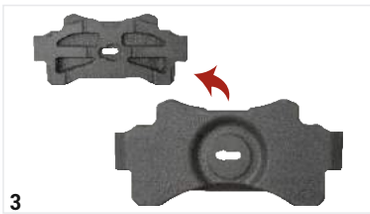
3

2

11

13

8

7

6

9

10

NR	CHEEFT NR	DESCRIPTIONS	QTY
1	2128	GUIDES & SEALS REPAIR KIT	1
2	2130	ADJUSTER GEAR (RIGHT)	1
3	2190	PUSH PLATE	1
4	2132	ADJUSTING MECHANISM (RIGHT)	1
5	2196	BUSH & BEARING KIT	1
6	2618	SHAFT OUTER SEAL Ø57 / Ø40 mm	1
7	2619	SEAL COVER Ø62 x Ø42 x 6 mm	1
8	2617	SHAFT INNER SEAL Ø52 / Ø39 mm	1
9	2621	DUST PLUG	1
10	2622	O-RING	1

NR	CHEEFT NR	DESCRIPTIONS	QTY
11	2620	COVER GASKET	1
12	2223	SHAFT REPAIR KIT (RIGHT)	1
13	2586	TAPPET DUST EXCLUDER	1
14	2151	SHAFT LEVER	1

ORIGINAL PART NUMBERS,MARKS AND MODELS MENTIONED ARE ONLY FOR DESCRIPTION PURPOSES.

SETS

D3 REPAIR SET (SHORT-LEFT)

CHEEFT NUMBER: CHS2023

NR	CHEEFT NR	DESCRIPTIONS	QTY
1	2061	SHAFT LEVER (26 TEETH)	1
2	2083	GUIDES & SEALS REPAIR KIT	1
3	2088	SHAFT ASSEMBLY (SHORT-LEFT 26 TEETH)	1
4	2184	D3 MECHANISM (LEFT)	1
5	2099	DUST COVER & SEALS REPAIR KIT	1
6	2100	GEAR	1
7	2101	SHAFT ROLLER BEARING	1
8	2102	SHAFT ROLLER BEARING	1
9	2103	WAVY WASHER	1
10	2104	SHAFT BUSH	1

NR	CHEEFT NR	DESCRIPTIONS	QTY
11	2105	ADJUSTER BOLT	1
12	2106	SPRING KIT (LEFT)	1
13	2650	WASHER HOUSING	1
14	2187	PUSH PLATE	1
15	2674	CIRCLIP (Ø59 X 1,5 mm)	1
16	2706	WAVY WASHER	1
17	2734	SEAL	1
18	2540	SPRING PLATE	1

D3 REPAIR SET (SHORT-RIGHT)

CHEEFT NUMBER: CHS2024

NR	CHEEFT NR	DESCRIPTIONS	QTY
1	2061	SHAFT LEVER (26 TEETH)	1
2	2083	GUIDES & SEALS REPAIR KIT	1
3	2089	SHAFT ASSEMBLY (SHORT-RIGHT 26 TEETH)	1
4	2183	D3 MECHANISM (RIGHT)	1
5	2099	DUST COVER & SEALS REPAIR KIT	1
6	2100	GEAR	1
7	2101	SHAFT ROLLER BEARING	1
8	2102	SHAFT ROLLER BEARING	1
9	2103	WAVY WASHER	1
10	2104	SHAFT BUSH	1

NR	CHEEFT NR	DESCRIPTIONS	QTY
11	2105	ADJUSTER BOLT	1
12	2107	SPRING KIT (RIGHT)	1
13	2650	WASHER HOUSING	1
14	2187	PUSH PLATE	1
15	2674	CIRCLIP (Ø59 X 1,5 mm)	1
16	2706	WAVY WASHER	1
17	2734	SEAL	1
18	2540	SPRING PLATE	1

ORIGINAL PART NUMBERS,MARKS AND MODELS MENTIONED ARE ONLY FOR DESCRIPTION PURPOSES.

SETS

D3 REPAIR SET (SHORT-LEFT)

CHEEFT NUMBER	CHS2025

NR	CHEEFT NR	DESCRIPTIONS	QTY
1	2082	SHAFT LEVER (48 TEETH)	1
2	2083	GUIDES & SEALS REPAIR KIT	1
3	2090	SHAFT ASSEMBLY (SHORT-LEFT 48 TEETH)	1
4	2184	D3 MECHANISM (LEFT)	1
5	2099	DUST COVER & SEALS REPAIR KIT	1
6	2100	GEAR	1
7	2101	SHAFT ROLLER BEARING	1
8	2102	SHAFT ROLLER BEARING	1
9	2103	WAVY WASHER	1
10	2104	SHAFT BUSH	1

NR	CHEEFT NR	DESCRIPTIONS	QTY
11	2105	ADJUSTER BOLT	1
12	2106	SPRING KIT (LEFT)	1
13	2650	WASHER HOUSING	1
14	2187	PUSH PLATE	1
15	2674	CIRCLIP (Ø59 X 1,5 mm)	1
16	2706	WAVY WASHER	1
17	2734	SEAL	1
18	2540	SPRING PLATE	1

D3 REPAIR SET (SHORT-RIGHT)

CHEEFT NUMBER	CHS2026

NR	CHEEFT NR	DESCRIPTIONS	QTY
1	2082	SHAFT LEVER (48 TEETH)	1
2	2083	GUIDES & SEALS REPAIR KIT	1
3	2091	SHAFT ASSEMBLY (SHORT-RIGHT 48 TEETH)	1
4	2183	D3 MECHANISM (RIGHT)	1
5	2099	DUST COVER & SEALS REPAIR KIT	1
6	2100	GEAR	1
7	2101	SHAFT ROLLER BEARING	1
8	2102	SHAFT ROLLER BEARING	1
9	2103	WAVY WASHER	1
10	2104	SHAFT BUSH	1

NR	CHEEFT NR	DESCRIPTIONS	QTY
11	2105	ADJUSTER BOLT	1
12	2107	SPRING KIT (RIGHT)	1
13	2650	WASHER HOUSING	1
14	2187	PUSH PLATE	1
15	2674	CIRCLIP (Ø59 X 1,5 mm)	1
16	2706	WAVY WASHER	1
17	2734	SEAL	1
18	2540	SPRING PLATE	1

ORIGINAL PART NUMBERS,MARKS AND MODELS MENTIONED ARE ONLY FOR DESCRIPTION PURPOSES.

SETS

D3 REPAIR SET (LONG-LEFT)

CHEEFT NUMBER: CHS2027

NR	CHEEFT NR	DESCRIPTIONS	QTY
1	2061	SHAFT LEVER (26 TEETH)	1
2	2083	GUIDES & SEALS REPAIR KIT	1
3	2092	SHAFT ASSEMBLY (LONG-LEFT 26 TEETH)	1
4	2184	D3 MECHANISM (LEFT)	1
5	2099	DUST COVER & SEALS REPAIR KIT	1
6	2100	GEAR	1
7	2101	SHAFT ROLLER BEARING	1
8	2102	SHAFT ROLLER BEARING	1
9	2103	WAVY WASHER	1
10	2104	SHAFT BUSH	1

NR	CHEEFT NR	DESCRIPTIONS	QTY
11	2105	ADJUSTER BOLT	1
12	2106	SPRING KIT (LEFT)	1
13	2650	WASHER HOUSING	1
14	2187	PUSH PLATE	1
15	2674	CIRCLIP (Ø59 X 1,5 mm)	1
16	2706	WAVY WASHER	1
17	2734	SEAL	1
18	2540	SPRING PLATE	1

D3 REPAIR SET (LONG-RIGHT)

CHEEFT NUMBER: CHS2028

NR	CHEEFT NR	DESCRIPTIONS	QTY
1	2061	SHAFT LEVER (26 TEETH)	1
2	2083	GUIDES & SEALS REPAIR KIT	1
3	2093	SHAFT ASSEMBLY (LONG-RIGHT 26 TEETH)	1
4	2183	D3 MECHANISM (RIGHT)	1
5	2099	DUST COVER & SEALS REPAIR KIT	1
6	2100	GEAR	1
7	2101	SHAFT ROLLER BEARING	1
8	2102	SHAFT ROLLER BEARING	1
9	2103	WAVY WASHER	1
10	2104	SHAFT BUSH	1

NR	CHEEFT NR	DESCRIPTIONS	QTY
11	2105	ADJUSTER BOLT	1
12	2107	SPRING KIT (RIGHT)	1
13	2650	WASHER HOUSING	1
14	2187	PUSH PLATE	1
15	2674	CIRCLIP (Ø59 X 1,5 mm)	1
16	2706	WAVY WASHER	1
17	2734	SEAL	1
18	2540	SPRING PLATE	1

ORIGINAL PART NUMBERS,MARKS AND MODELS MENTIONED ARE ONLY FOR DESCRIPTION PURPOSES.

SETS

463-464 MN SET (RIGHT NEW MODEL)

CHEEFT NUMBER	CHS2008

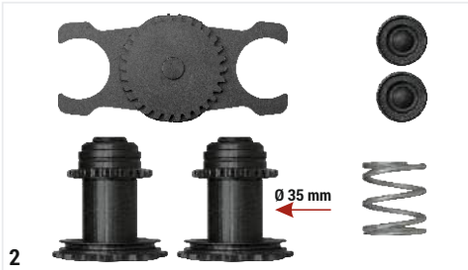

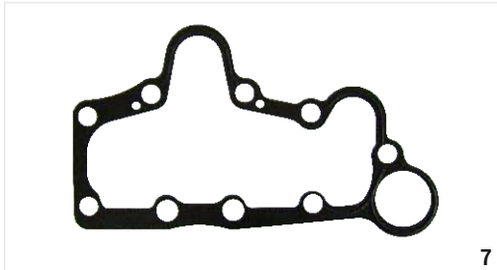

NR	CHEEFT NR	DESCRIPTIONS	QTY
1	2141	GUIDES & SEALS REPAIR KIT	1
2	2077	ADJUSTING MECHANISM (RIGHT) 35 mm	1
3	2072	ADJUSTING MECHANISM CLUTCH 44 mm	1
4	2070	BEARING REPAIR KIT (AXIAL)	1
5	2069	TAPPET DUST COVERS	1
6	2079	LOCKING SHIM	1
7	2212	COVER GASKET	1
8	2074	ADJUSTING MECHANISM	1
9	2080	SPRING & RETAINERS REPAIR KIT (RIGHT)	1

463-464 MN SET (LEFT NEW MODEL)

CHEEFT NUMBER	CHS2009

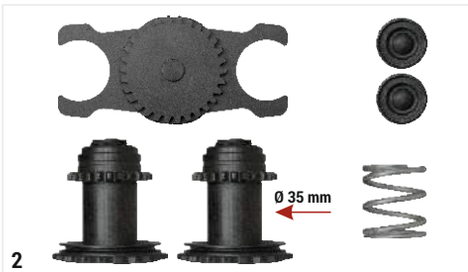

NR	CHEEFT NR	DESCRIPTIONS	QTY
1	2141	GUIDES & SEALS REPAIR KIT	1
2	2078	ADJUSTING MECHANISM (LEFT) 35 mm	1
3	2073	ADJUSTING MECHANISM CLUTCH 44 mm	1
4	2070	BEARING REPAIR KIT (AXIAL)	1
5	2069	TAPPET DUST COVERS	1
6	2079	LOCKING SHIM	1
7	2212	COVER GASKET	1
8	2074	ADJUSTING MECHANISM	1
9	2081	SPRING & RETAINERS REPAIR KIT (LEFT)	1

ORIGINAL PART NUMBERS,MARKS AND MODELS MENTIONED ARE ONLY FOR DESCRIPTION PURPOSES.

SETS

463-464 MN SET (RIGHT NEW MODEL)

CHEEFT NUMBER	CHS2017

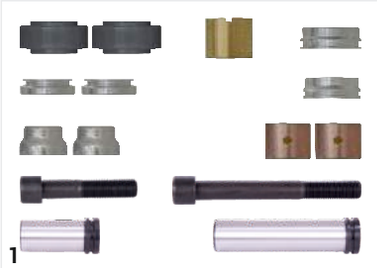

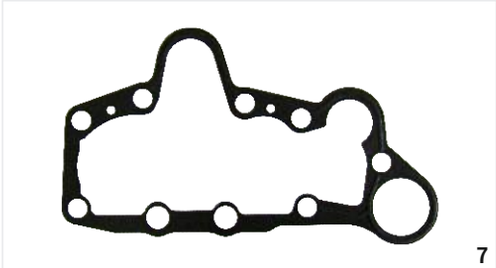

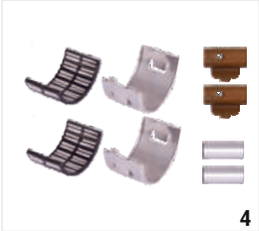

NR	CHEEFT NR	DESCRIPTIONS	QTY
1	2067	GUIDES & SEALS REPAIR KIT	1
2	2077	ADJUSTING MECHANISM (RIGHT) 35 mm	1
3	2072	ADJUSTING MECHANISM CLUTCH 44 mm	1
4	2070	BEARING REPAIR KIT (AXIAL)	1
5	2069	TAPPET DUST COVERS	1
6	2079	LOCKING SHIM	1
7	2211	COVER GASKET	1
8	2074	ADJUSTING MECHANISM	1
9	2080	SPRING & RETAINERS REPAIR KIT (RIGHT)	1

463-464 MN SET (LEFT NEW MODEL)

CHEEFT NUMBER	CHS2018

NR	CHEEFT NR	DESCRIPTIONS	QTY
1	2067	GUIDES & SEALS REPAIR KIT	1
2	2078	ADJUSTING MECHANISM (LEFT) 35 mm	1
3	2073	ADJUSTING MECHANISM CLUTCH 44 mm	1
4	2070	BEARING REPAIR KIT (AXIAL)	1
5	2069	TAPPET DUST COVERS	1
6	2079	LOCKING SHIM	1
7	2211	COVER GASKET	1
8	2074	ADJUSTING MECHANISM	1
9	2081	SPRING & RETAINERS REPAIR KIT (LEFT)	1

ORIGINAL PART NUMBERS,MARKS AND MODELS MENTIONED ARE ONLY FOR DESCRIPTION PURPOSES.

SETS

463-464 MN SET (RIGHT OLD MODEL)

CHEEFT NUMBER	CHS2010

NR	CHEEFT NR	DESCRIPTIONS	QTY
1	2141	GUIDES & SEALS REPAIR KIT	1
2	2217	ADJUSTING MECHANISM (RIGHT) 37,5 mm	1
3	2072	ADJUSTING MECHANISM CLUTCH 44 mm	1
4	2070	BEARING REPAIR KIT (AXIAL)	1
5	2069	TAPPET DUST COVERS	1
6	2079	LOCKING SHIM	1
7	2213	COVER GASKET	1
8	2074	ADJUSTING MECHANISM	1
9	2080	SPRING & RETAINERS REPAIR KIT (RIGHT)	1

463-464 MN SET (LEFT OLD MODEL)

CHEEFT NUMBER	CHS2011

NR	CHEEFT NR	DESCRIPTIONS	QTY
1	2141	GUIDES & SEALS REPAIR KIT	1
2	2218	ADJUSTING MECHANISM (LEFT) 37,5 mm	1
3	2073	ADJUSTING MECHANISM CLUTCH 44 mm	1
4	2070	BEARING REPAIR KIT (AXIAL)	1
5	2069	TAPPET DUST COVERS	1
6	2079	LOCKING SHIM	1
7	2213	COVER GASKET	1
8	2074	ADJUSTING MECHANISM	1
9	2081	SPRING & RETAINERS REPAIR KIT (LEFT)	1

ORIGINAL PART NUMBERS,MARKS AND MODELS MENTIONED ARE ONLY FOR DESCRIPTION PURPOSES.

SETS

463-464 MN SET (RIGHT OLD MODEL)

CHEEFT NUMBER	CHS2019

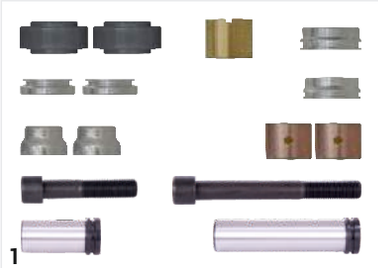

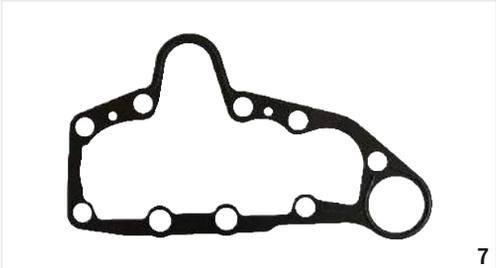

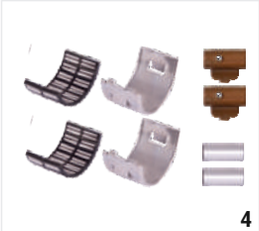

NR	CHEEFT NR	DESCRIPTIONS	QTY
1	2067	GUIDES & SEALS REPAIR KIT	1
2	2217	ADJUSTING MECHANISM (RIGHT) 37,5 mm	1
3	2072	ADJUSTING MECHANISM CLUTCH 44 mm	1
4	2070	BEARING REPAIR KIT (AXIAL)	1
5	2069	TAPPET DUST COVERS	1
6	2079	LOCKING SHIM	1
7	2213	COVER GASKET	1
8	2074	ADJUSTING MECHANISM	1
9	2080	SPRING & RETAINERS REPAIR KIT (RIGHT)	1

463-464 MN SET (LEFT OLD MODEL)

CHEEFT NUMBER	CHS2020

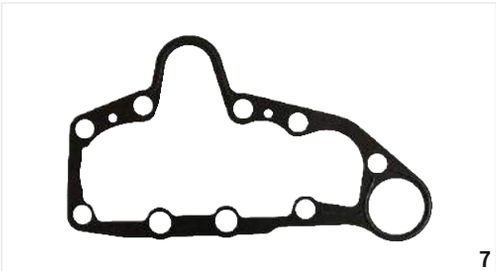

NR	CHEEFT NR	DESCRIPTIONS	QTY
1	2067	GUIDES & SEALS REPAIR KIT	1
2	2218	ADJUSTING MECHANISM (LEFT) 37,5 mm	1
3	2073	ADJUSTING MECHANISM CLUTCH 44 mm	1
4	2070	BEARING REPAIR KIT (AXIAL)	1
5	2069	TAPPET DUST COVERS	1
6	2079	LOCKING SHIM	1
7	2213	COVER GASKET	1
8	2074	ADJUSTING MECHANISM	1
9	2081	SPRING & RETAINERS REPAIR KIT (LEFT)	1

ORIGINAL PART NUMBERS,MARKS AND MODELS MENTIONED ARE ONLY FOR DESCRIPTION PURPOSES.

SETS

RNLT 420 SET (LEFT OLD MODEL)

CHEEFT NUMBER	CHS2001

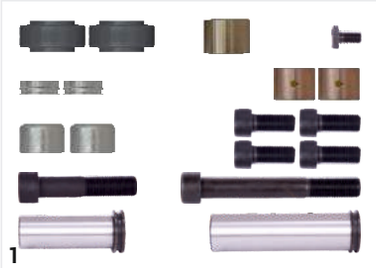
1

2

4

3

6

8

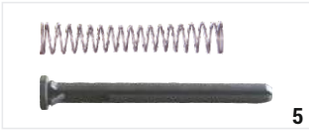
5

7

NR	CHEEFT NR	DESCRIPTIONS	QTY
1	2133	GUIDE & SEALS REPAIR KIT	1
2	2224	MECHANISM GEAR & COVER KIT	1
3	2137	ADJUSTER GEAR (LEFT)	1
4	2070	BEARING REPAIR KIT (AXIAL)	1
5	2286	VISUAL INDICATOR	1
6	2140	BEARING CAPS	1
7	2200	ACTUATOR SEAL	1
8	2209	ADJUSTER SEAL & BOOT REPAIR KIT	1

RNLT 420 SET (RIGHT OLD MODEL)

CHEEFT NUMBER	CHS2002

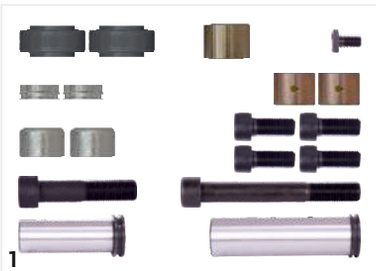
1

2

4

3

6

8

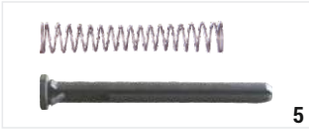
5

7

NR	CHEEFT NR	DESCRIPTIONS	QTY
1	2133	GUIDE & SEALS REPAIR KIT	1
2	2224	MECHANISM GEAR & COVER KIT	1
3	2138	ADJUSTER GEAR (RIGHT)	1
4	2070	BEARING REPAIR KIT (AXIAL)	1
5	2286	VISUAL INDICATOR	1
6	2140	BEARING CAPS	1
7	2200	ACTUATOR SEAL	1
8	2209	ADJUSTER SEAL & BOOT REPAIR KIT	1

ORIGINAL PART NUMBERS,MARKS AND MODELS MENTIONED ARE ONLY FOR DESCRIPTION PURPOSES.

SETS

RNLT 420 MN TGA SET (LEFT NEW MODEL)

CHEEFT NUMBER	CHS2003

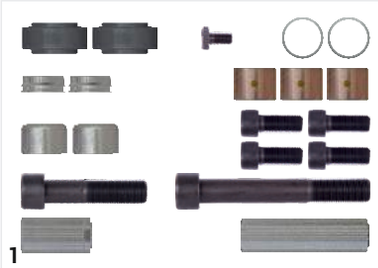
1

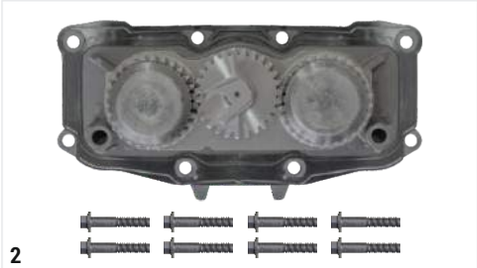
2

4

3

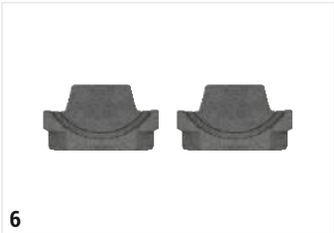
6

8

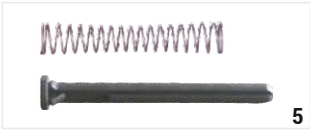
5

7

NR	CHEEFT NR	DESCRIPTIONS	QTY
1	2214	GUIDE & SEALS REPAIR KIT	1
2	2246	MECHANISM GEAR & COVER KIT	1
3	2137	ADJUSTER GEAR (LEFT)	1
4	2070	BEARING REPAIR KIT (AXIAL)	1
5	2286	VISUAL INDICATOR	1
6	2140	BEARING CAPS	1
7	2200	ACTUATOR SEAL	1
8	2209	ADJUSTER SEAL & BOOT REPAIR KIT	1

RNLT 420 MN TGA SET (RIGHT NEW MODEL)

CHEEFT NUMBER	CHS2004

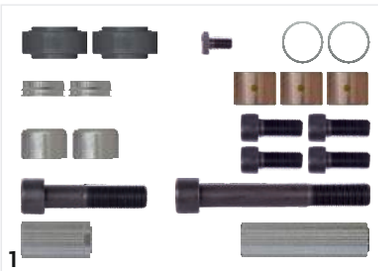
1

2

4

3

6

8

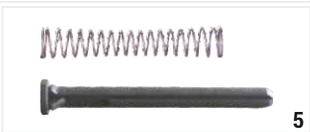
5

7

NR	CHEEFT NR	DESCRIPTIONS	QTY
1	2214	GUIDE & SEALS REPAIR KIT	1
2	2246	MECHANISM GEAR & COVER KIT	1
3	2138	ADJUSTER GEAR (RIGHT)	1
4	2070	BEARING REPAIR KIT (AXIAL)	1
5	2286	VISUAL INDICATOR	1
6	2140	BEARING CAPS	1
7	2200	ACTUATOR SEAL	1
8	2209	ADJUSTER SEAL & BOOT REPAIR KIT	1

ORIGINAL PART NUMBERS,MARKS AND MODELS MENTIONED ARE ONLY FOR DESCRIPTION PURPOSES.

SETS

RNLT 440 MN SET (ELSA 195/225 RADIAL-AXIAL / LEFT-RIGHT)

CHEEFT NUMBER	CHS2005

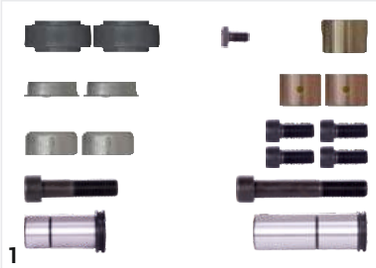
1

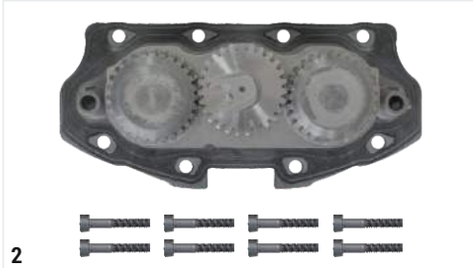
2

4

3

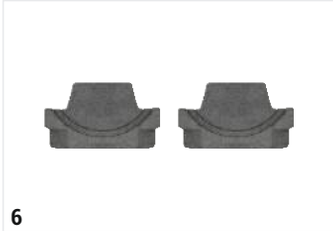
6

8

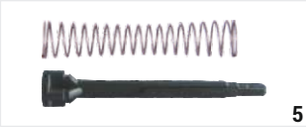
5

7

NR	CHEEFT NR	DESCRIPTIONS	QTY
1	2210	GUIDE & SEALS REPAIR KIT	1
2	2225	MECHANISM GEAR & COVER KIT	1
3	2188	ADJUSTER GEAR	1
4	2070	BEARING REPAIR KIT (AXIAL)	1
5	2227	VISUAL INDICATOR	1
6	2140	BEARING CAPS	1
7	2200	ACTUATOR SEAL	1
8	2209	ADJUSTER SEAL & BOOT REPAIR KIT	1

VLV SET NEW MODEL (ELSA 195/225 RADIAL-AXIAL LEFT-RIGHT)

CHEEFT NUMBER	CHS2036

1

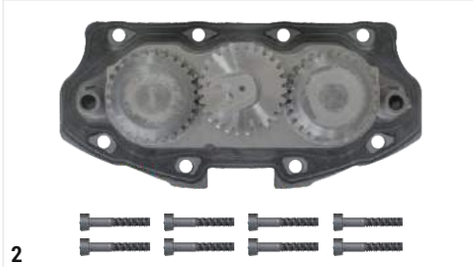
2

4

3

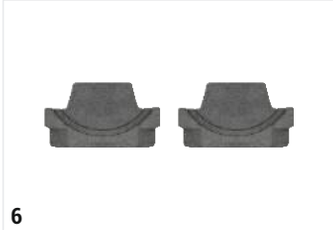
6

8

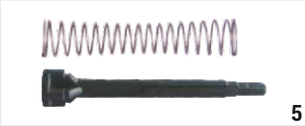
5

7

NR	CHEEFT NR	DESCRIPTIONS	QTY
1	2247	GUIDE & SEALS REPAIR KIT	1
2	2225	MECHANISM GEAR & COVER KIT	1
3	2188	ADJUSTER GEAR	1
4	2070	BEARING REPAIR KIT (AXIAL)	1
5	2227	VISUAL INDICATOR	1
6	2140	BEARING CAPS	1
7	2200	ACTUATOR SEAL	1
8	2209	ADJUSTER SEAL & BOOT REPAIR KIT	1

ORIGINAL PART NUMBERS,MARKS AND MODELS MENTIONED ARE ONLY FOR DESCRIPTION PURPOSES.

SETS

DX 175 TYPE (LEFT)

CHEEFT NUMBER CHS2034

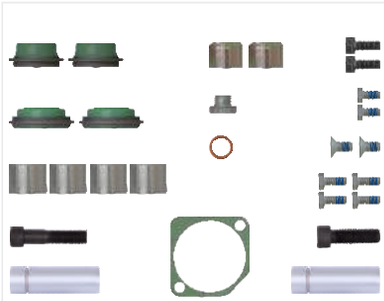
1

10

8

4

11

7

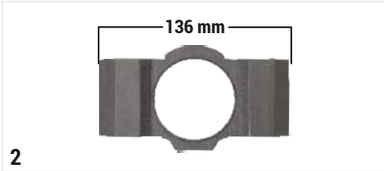

2

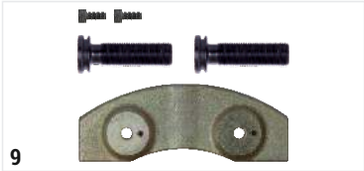
9

5

3

6

NR	CHEEFT NR	DESCRIPTIONS	QTY
1	2300	GUIDES & SEALS REPAIR KIT	1
2	2295	BRIDGE ASSEMBLY	1
3	2294	CENTERING GEAR KIT	1
4	2296	PAD RETAINER	1
5	2307	ECCENTRIC SHAFT KIT	1
6	2305	SHAFT ROLLER BEARING	1
7	2793	COVER	1
8	2290	ADJUSTMENT SLEEVE (LEFT)	1
9	2292	PUSH PLATE REPAIR KIT (LEFT)	1
10	2297	ADJUSTING MECHANISM REPAIR KIT (LEFT)	1

NR	CHEEFT NR	DESCRIPTIONS	QTY
11	2794	SHAFT GASKET	1

DX 175 TYPE (RIGHT)

CHEEFT NUMBER CHS2035

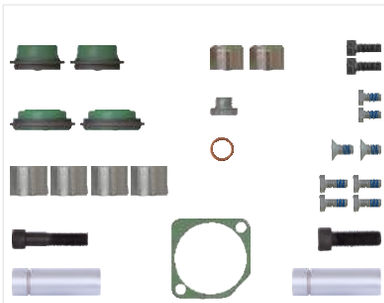
1

10

8

4

11

7

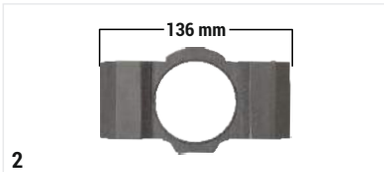

2

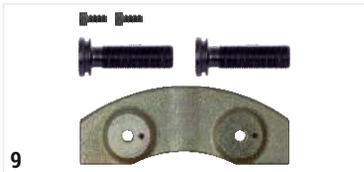
9

5

3

6

NR	CHEEFT NR	DESCRIPTIONS	QTY
1	2300	GUIDES & SEALS REPAIR KIT	1
2	2295	BRIDGE ASSEMBLY	1
3	2294	CENTERING GEAR KIT	1
4	2296	PAD RETAINER	1
5	2307	ECCENTRIC SHAFT KIT	1
6	2305	SHAFT ROLLER BEARING	1
7	2793	COVER	1
8	2291	ADJUSTMENT SLEEVE (RIGHT)	1
9	2293	PUSH PLATE REPAIR KIT (RIGHT)	1
10	2298	ADJUSTING MECHANISM REPAIR KIT (RIGHT)	1

NR	CHEEFT NR	DESCRIPTIONS	QTY
11	2794	SHAFT GASKET	1

ORIGINAL PART NUMBERS,MARKS AND MODELS MENTIONED ARE ONLY FOR DESCRIPTION PURPOSES.

SETS

DX 195 REPAIR SET (RIGHT)

CHEEFT NUMBER: CHS2015

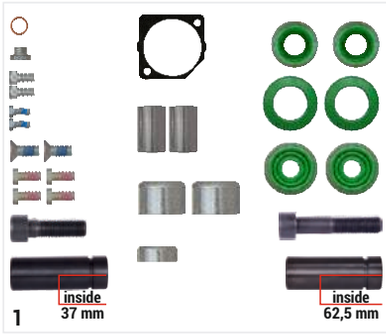

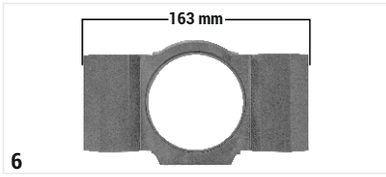

NR	CHEEFT NR	DESCRIPTIONS	QTY
1	2048	OVERHAUL REPAIR KIT	1
2	2049	SHAFT ASSEMBLY	1
3	2050	ROLLER BEARING	1
4	2053	PUSH PLATE REPAIR KIT (RIGHT)	1
5	2062	SHAFT LEVER	1
6	2194	BRIDGE ASSEMBLY 163 mm	1
7	2724	SHAFT DUST COVER	1
8	2725	COVER PLATE SEAL	1
9	2234	ADJUSTMENT SLEEVE (RIGHT)	1
10	2699	SHAFT BEARING	1

NR	CHEEFT NR	DESCRIPTIONS	QTY
11	2238	CENTERING GEAR KIT	1
12	2240	ADJUSTING MECHANISM REPAIR KIT (RIGHT)	1
13	2715	WASHER	1

DX 195 REPAIR SET (LEFT)

CHEEFT NUMBER: CHS2016

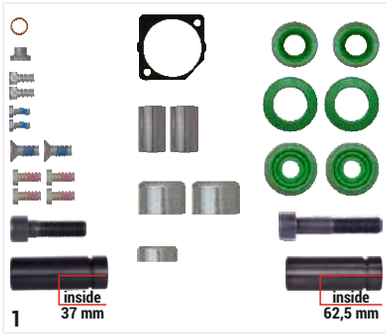

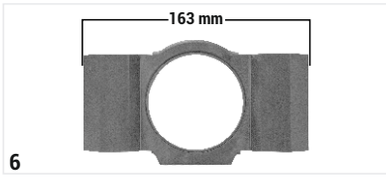

NR	CHEEFT NR	DESCRIPTIONS	QTY
1	2048	OVERHAUL REPAIR KIT	1
2	2049	SHAFT ASSEMBLY	1
3	2050	ROLLER BEARING	1
4	2054	PUSH PLATE REPAIR KIT (LEFT)	1
5	2062	SHAFT LEVER	1
6	2194	BRIDGE ASSEMBLY 163 mm	1
7	2724	SHAFT DUST COVER	1
8	2725	COVER PLATE SEAL	1
9	2233	ADJUSTMENT SLEEVE (LEFT)	1
10	2699	SHAFT BEARING	1

NR	CHEEFT NR	DESCRIPTIONS	QTY
11	2238	CENTERING GEAR KIT	1
12	2241	ADJUSTING MECHANISM REPAIR KIT (LEFT)	1
13	2715	WASHER	1

ORIGINAL PART NUMBERS,MARKS AND MODELS MENTIONED ARE ONLY FOR DESCRIPTION PURPOSES.

SETS

DX 225 REPAIR SET (RIGHT)

CHEEFT NUMBER: CHS2021

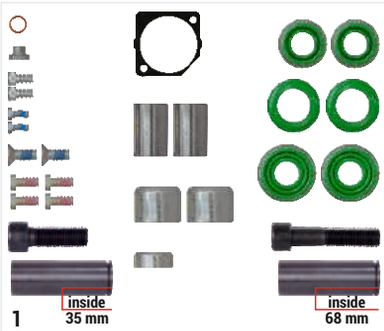

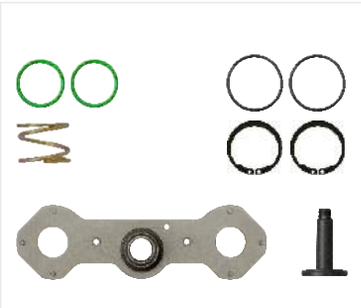

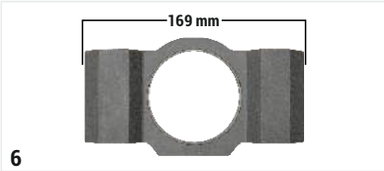

NR	CHEEFT NR	DESCRIPTIONS	QTY
1	2060	OVERHAUL REPAIR KIT	1
2	2049	SHAFT ASSEMBLY	1
3	2050	ROLLER BEARING	1
4	2146	PUSH PLATE REPAIR KIT (RIGHT)	1
5	2062	SHAFT LEVER	1
6	2149	BRIDGE ASSEMBLY	1
7	2724	SHAFT DUST COVER	1
8	2725	COVER PLATE SEAL	1
9	2145	ADJUSTMENT SLEEVE (RIGHT)	1
10	2699	SHAFT BEARING	1

NR	CHEEFT NR	DESCRIPTIONS	QTY
11	2238	CENTERING GEAR KIT	1
12	2166	ADJUSTING MECHANISM REPAIR KIT (RIGHT)	1
13	2715	WASHER	1

DX 225 REPAIR SET (LEFT)

CHEEFT NUMBER: CHS2022

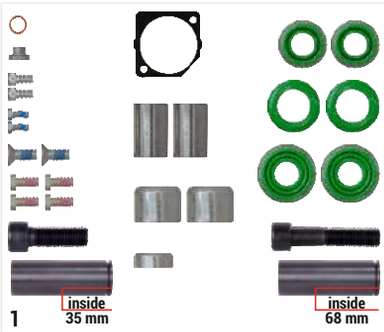

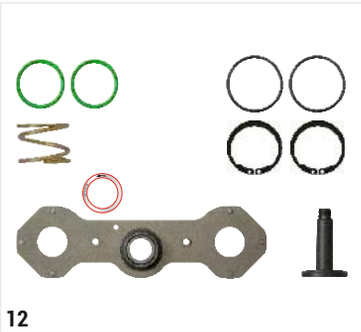

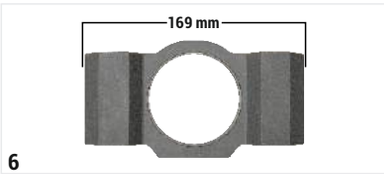

NR	CHEEFT NR	DESCRIPTIONS	QTY
1	2060	OVERHAUL REPAIR KIT	1
2	2049	SHAFT ASSEMBLY	1
3	2050	ROLLER BEARING	1
4	2147	PUSH PLATE REPAIR KIT (LEFT)	1
5	2062	SHAFT LEVER	1
6	2149	BRIDGE ASSEMBLY	1
7	2724	SHAFT DUST COVER	1
8	2725	COVER PLATE SEAL	1
9	2144	ADJUSTMENT SLEEVE (LEFT)	1
10	2699	SHAFT BEARING	1

NR	CHEEFT NR	DESCRIPTIONS	QTY
11	2238	CENTERING GEAR KIT	1
12	2167	ADJUSTING MECHANISM REPAIR KIT (LEFT)	1
13	2715	WASHER	1

ORIGINAL PART NUMBERS,MARKS AND MODELS MENTIONED ARE ONLY FOR DESCRIPTION PURPOSES.

COHEEFT®
AIR DISC BRAKE CALIPER REPAIR KITS

WBC

MAXX 22T TYPE
(SCHMITZ SCB430W1)

Always the Best...

EAC CE UDEM JAS-ANZ ISO 9001 2015

MAXX 22T TYPE (SCHMITZ SCB430W1)

CHEEFT NUMBER	3100

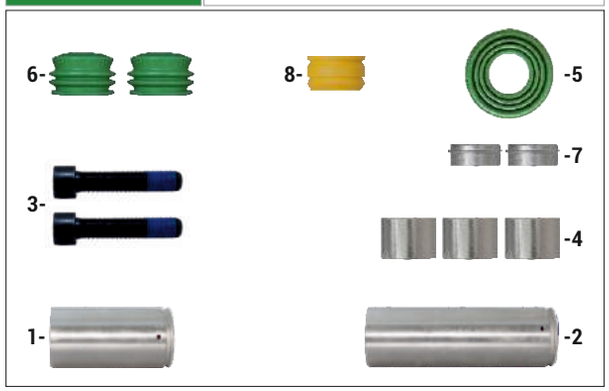

Caliper Guides & Seals Repair Kit

OEM NUMBER	640 222 928 2

NR	CHEEFT NR	DESCRIPTIONS	DIMENSION	QTY
1	3528	GUIDE PIN	Ø37,70 x 76 mm	1
2	3529	GUIDE PIN	Ø38 x 63/118 mm	1
3	3512	BOLT	M16 x 1,5 x 80 mm	2
4	3522	TEFLON BUSH	Ø42 x Ø38 x 30 mm	3
5	3531	BOLT DUST EXCLUDER		1
6	3530	GUIDE PIN GAITER		2
7	3542	STEEL CAP	Ø42,5 x 17 mm	2
8	3551	PLUG		1

CHEEFT NUMBER	3105

Caliper Adjusting Mechanism

OEM NUMBER	

NR	CHEEFT NR	DESCRIPTIONS	DIMENSION	QTY
1	3595	ADJUSTER SLEEVE		1
2	3596	CALIBRATION BOLT		1
3	3589	SPRING PLUG	Ø33,75 x 30,4 mm	1
4	3591	RETAINER	Ø38,75 x Ø34 x 13,8 mm	1
5	3592	SPRING	Ø42,6 x 25 mm	1

CHEEFT NUMBER	3106

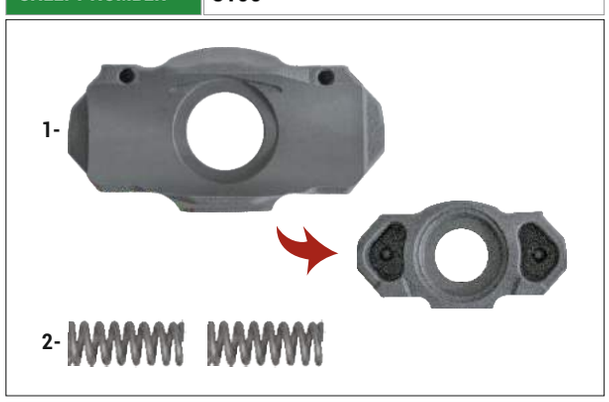

Caliper Adjusting Mechanism Support

OEM NUMBER	

NR	CHEEFT NR	DESCRIPTIONS	DIMENSION	QTY
1	3597	MECHANISM SUPPORT		1
2	3603	SPRING		2

ORIGINAL PART NUMBERS,MARKS AND MODELS MENTIONED ARE ONLY FOR DESCRIPTION PURPOSES.

MAXX 22T TYPE (SCHMITZ SCB430W1)

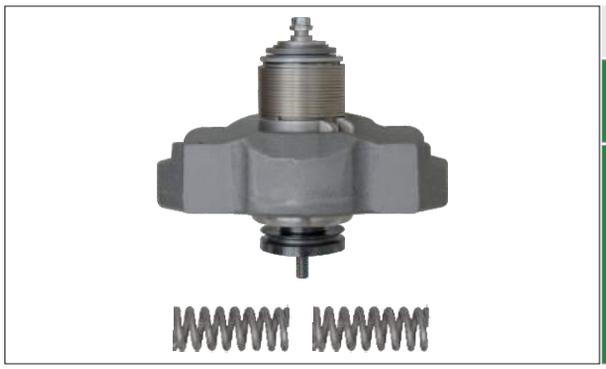

Caliper Adjusting Mechanism Assembly	
CHEEFT NUMBER	3101
OEM NUMBER	

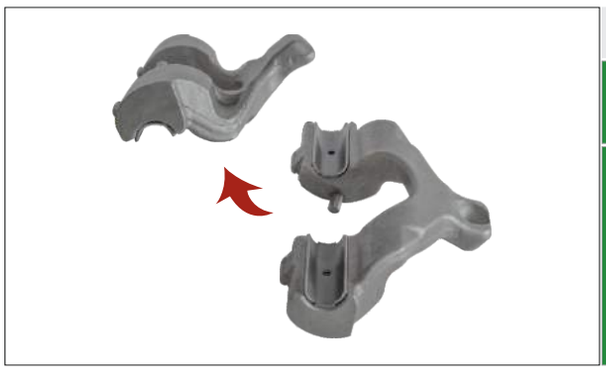

Caliper Lever (With Pin)	
CHEEFT NUMBER	3102
OEM NUMBER	

Caliper Push Plate Slotted (Left)	
CHEEFT NUMBER	3161
OEM NUMBER	

Caliper Push Plate Slotted (Right)	
CHEEFT NUMBER	3162
OEM NUMBER	

Caliper Roller Bearing	
CHEEFT NUMBER	3134
OEM NUMBER	

ORIGINAL PART NUMBERS,MARKS AND MODELS MENTIONED ARE ONLY FOR DESCRIPTION PURPOSES.

MAXX 22T TYPE (SCHMITZ SCB430W1)

CHEEFT NUMBER	3104

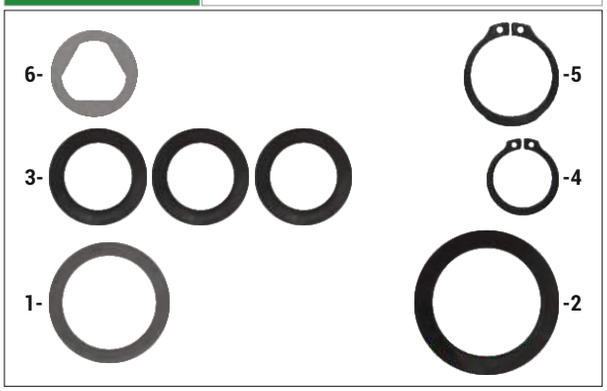

Caliper Washer & Circlip Repair Kit

OEM NUMBER	

NR	CHEEFT NR	DESCRIPTIONS	DIMENSION	QTY
1	3610	WASHER	Ø46,75 x Ø34,5 mm	1
2	3611	WASHER	Ø52,7 x Ø41 mm	1
3	3612	WASHER	Ø35,3 x Ø24,3 mm	3
4	3613	CIRCLIP		1
5	3614	CIRCLIP		1
6	3598	LOCKER		1

CHEEFT NUMBER	3103

Caliper Cover

OEM NUMBER	

NR	CHEEFT NR	DESCRIPTIONS	DIMENSION	QTY
1	3594	COVER (WITH GASKET)		1
2	1573	BOLT	M8 x 16 mm	6

ORIGINAL PART NUMBERS,MARKS AND MODELS MENTIONED ARE ONLY FOR DESCRIPTION PURPOSES.

MAXX 22T TYPE (SCHMITZ SCB430W1)

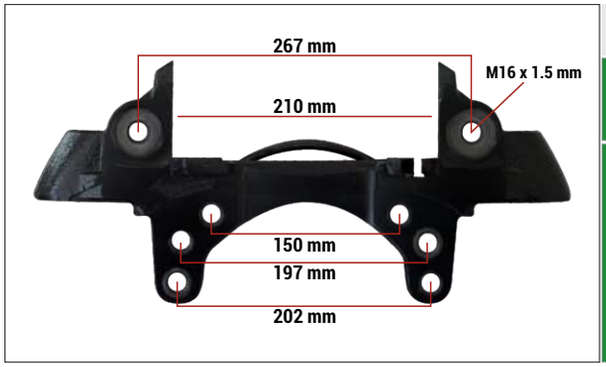

WBC Caliper Carrier for Schmitz Trailer (Right)	
CHEEFT NUMBER	3277
OEM NUMBER	6402227406 D1-6J20

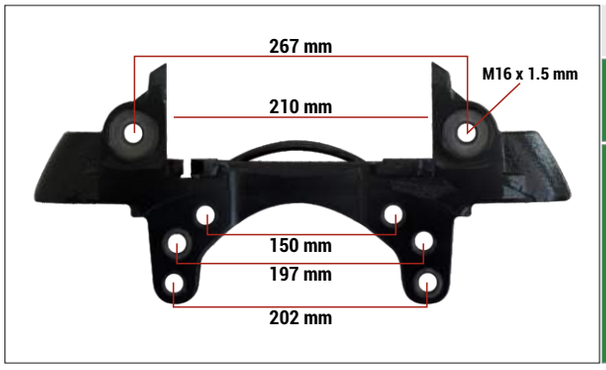

WBC Caliper Carrier for Schmitz Trailer (Left)	
CHEEFT NUMBER	3278
OEM NUMBER	6402227406 D3-6K25

ORIGINAL PART NUMBERS,MARKS AND MODELS MENTIONED ARE ONLY FOR DESCRIPTION PURPOSES.

MAXX 22T TYPE (SCHMITZ SCB430W1)

MAXX 22T SET (RIGHT)

CHEEFT NUMBER	CHS3009

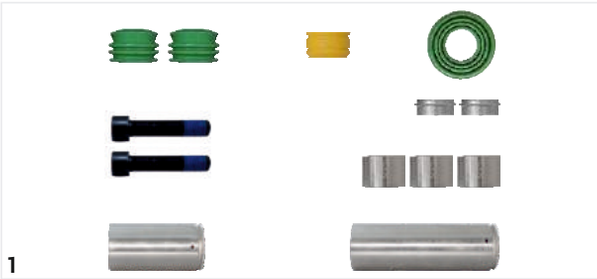

NR	CHEEFT NR	DESCRIPTIONS	QTY
1	3100	GUIDES & SEALS REPAIR KIT	1
2	3103	COVER	1
3	3101	ADJUSTING MECHANISM ASSEMBLY	1
4	3102	LEVER (WITH PIN)	1
5	3162	PUSH PLATE SLOTTED (RIGHT)	1
6	3134	ROLLER BEARING	1
7	3615	ROLLER	2
8	3552	SEAL	1

MAXX 22T SET (LEFT)

CHEEFT NUMBER	CHS3010

NR	CHEEFT NR	DESCRIPTIONS	QTY
1	3100	GUIDES & SEALS REPAIR KIT	1
2	3103	COVER	1
3	3101	ADJUSTING MECHANISM ASSEMBLY	1
4	3102	LEVER (WITH PIN)	1
5	3161	PUSH PLATE SLOTTED (LEFT)	1
6	3134	ROLLER BEARING	1
7	3615	ROLLER	2
8	3552	SEAL	1

ORIGINAL PART NUMBERS,MARKS AND MODELS MENTIONED ARE ONLY FOR DESCRIPTION PURPOSES.

COHEEFT®

AIR DISC BRAKE CALIPER REPAIR KITS

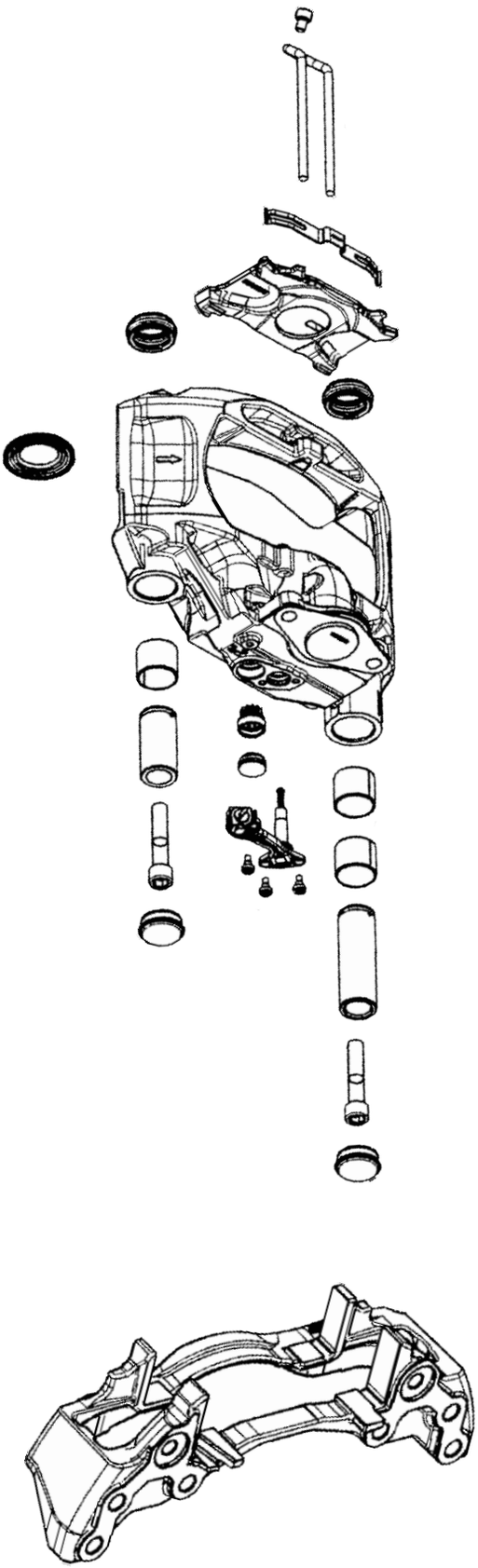

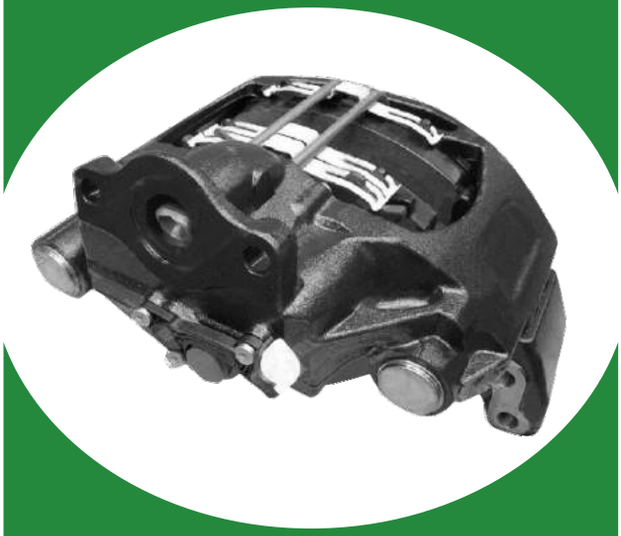

WBC

WBC

MAXX 22 TYPE

Always the Best...

EAC CE UDEM JAS-ANZ ISO 9001 2015

MAXX 22 TYPE

WBC

CHEEFT NUMBER	3140

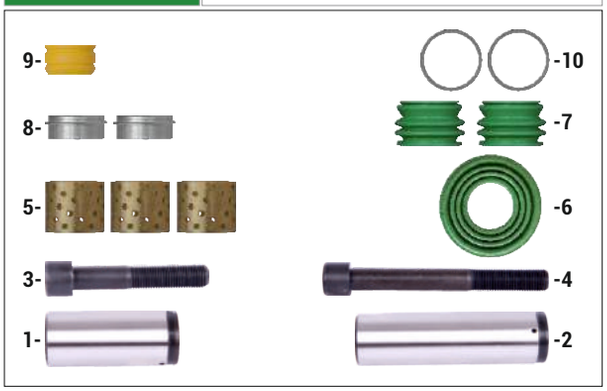

Caliper Guides & Seals Repair Kit

OEM NUMBER	MN 81.50822.6038 WBC 640 322 926 2

NR	CHEEFT NR	DESCRIPTIONS	DIMENSION	QTY
1	3503	GUIDE PIN	Ø37,70 x 76 mm	1
2	3504	GUIDE PIN	Ø38 x 118 mm	1
3	1513	BOLT	M16 x 1,5 x 80 mm	1
4	3514	BOLT	M16 x 1,5 x 120 mm	1
5	3525	BRONZE BUSH	Ø42,3 x Ø38 x 35 mm	3
6	3531	BOLT DUST EXCLUDER		1
7	3533	GUIDE PIN GAITER		2
8	3542	STEEL CAP	Ø42,5 x 17 mm	2
9	3551	PLUG		1
10	3544	RING	Ø44,5 x 1,25 mm	2

CHEEFT NUMBER	3141

Caliper Adjusting Mechanism Assembly MN TGX

OEM NUMBER	

NR	CHEEFT NR	DESCRIPTIONS	DIMENSION	QTY
1	3130	ADJUSTING MECHANISM		1
2	3132	ADJUSTING MECHANISM SUPPORT MAN TGX		1
3	3133	WASHER & CIRCLIP REPAIR KIT		1

CHEEFT NUMBER	3132

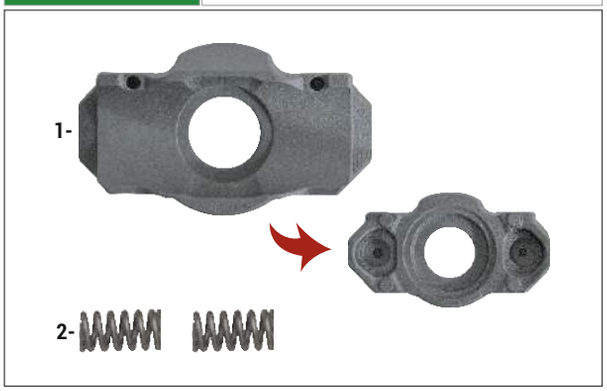

Caliper Adjusting Mechanism Support MN TGX

OEM NUMBER	

NR	CHEEFT NR	DESCRIPTIONS	DIMENSION	QTY
1	3584	MECHANISM SUPPORT		1
2	3602	SPRING		2

ORIGINAL PART NUMBERS,MARKS AND MODELS MENTIONED ARE ONLY FOR DESCRIPTION PURPOSES.

MAXX 22 TYPE

CHEEFT NUMBER	3130

Caliper Adjusting Mechanism

OEM NUMBER	

NR	CHEEFT NR	DESCRIPTIONS	DIMENSION	QTY
1	3587	ADJUSTER SLEEVE		1
2	3588	CALIBRATION BOLT		1
3	3589	SPRING PLUG	Ø33,75 x 30,4 mm	1
4	3592	SPRING	Ø42,6 x 25 mm	1
5	3590	ADJUSTER GEAR		1
6	3591	RETAINER	Ø38,75 x Ø34 x 13,8 mm	1

CHEEFT NUMBER	3142

Caliper Adjusting Mechanism Assembly MN TGS

OEM NUMBER	

NR	CHEEFT NR	DESCRIPTIONS	DIMENSION	QTY
1	3130	ADJUSTING MECHANISM		1
2	3127	ADJUSTING MECHANISM SUPPORT MAN TGS		1
3	3133	WASHER & CIRCLIP REPAIR KIT		1

CHEEFT NUMBER	3127

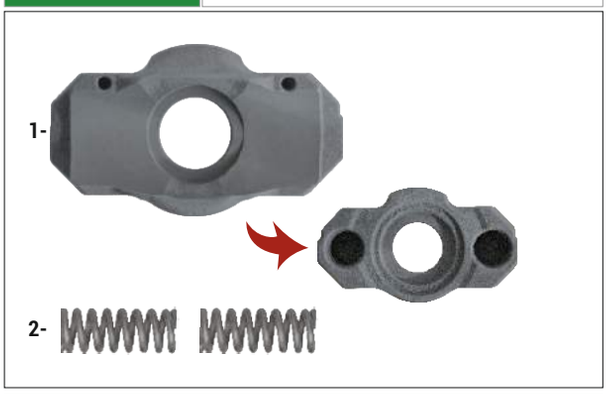

Caliper Adjusting Mechanism Support MN TGS

OEM NUMBER	322388

NR	CHEEFT NR	DESCRIPTIONS	DIMENSION	QTY
1	3600	MECHANISM SUPPORT		1
2	3603	SPRING		2

ORIGINAL PART NUMBERS,MARKS AND MODELS MENTIONED ARE ONLY FOR DESCRIPTION PURPOSES.

MAXX 22 TYPE

WBC

CHEEFT NUMBER	3137

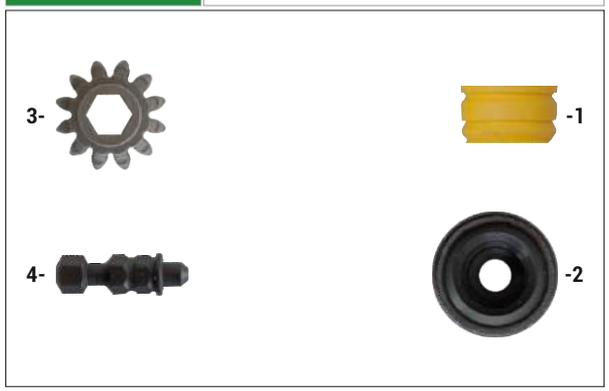

Caliper Plug Repair Kit

OEM NUMBER	MN 81.50822.6039 - WBC 640 322 927 2

NR	CHEEFT NR	DESCRIPTIONS	DIMENSION	QTY
1	3551	PLUG		1
2	3617	SEAL		1
3	3618	GEAR		1
4	3619	ADJUSTER PIN		1

CHEEFT NUMBER	3138

Caliper Cover

OEM NUMBER	640 322 650 4

NR	CHEEFT NR	DESCRIPTIONS	DIMENSION	QTY
1	3581	COVER (WITH GASKET)		1
2	1573	BOLT	M8 x 16 mm	6

CHEEFT NUMBER	3135

Caliper Bearing Repair Kit

OEM NUMBER	

NR	CHEEFT NR	DESCRIPTIONS	DIMENSION	QTY
1	3134	CALIPER ROLLER BEARING		1
2	3580	LEVER BUSH		2
3	3615	ROLLER		2

ORIGINAL PART NUMBERS,MARKS AND MODELS MENTIONED ARE ONLY FOR DESCRIPTION PURPOSES.

MAXX 22 TYPE

CHEEFT NUMBER	3136

Caliper Seal Repair Kit

OEM NUMBER	

NR	CHEEFT NR	DESCRIPTIONS	DIMENSION	QTY
1	3583	ACTUATOR SEAL		1
2	3616	STEEL CAP	Ø52,8 x Ø51,7 x 14,8 mm	1

CHEEFT NUMBER	3133

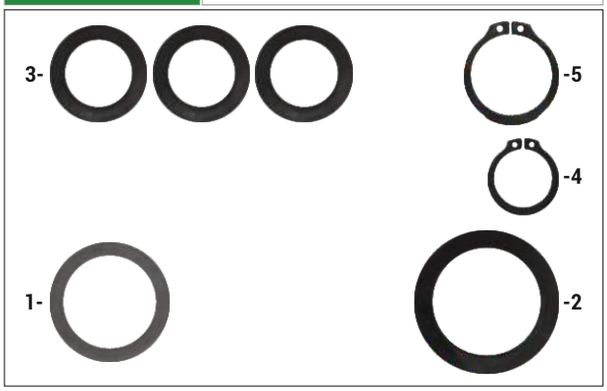

Caliper Washer & Circlip Repair Kit

OEM NUMBER	

NR	CHEEFT NR	DESCRIPTIONS	DIMENSION	QTY
1	3610	WASHER	Ø46,75 x Ø34,5 mm	1
2	3611	WASHER	Ø52,7 x Ø41 mm	1
3	3612	WASHER	Ø35,3 x Ø24,3 mm	3
4	3613	CIRCLIP		1
5	3614	CIRCLIP		1

CHEEFT NUMBER	3139

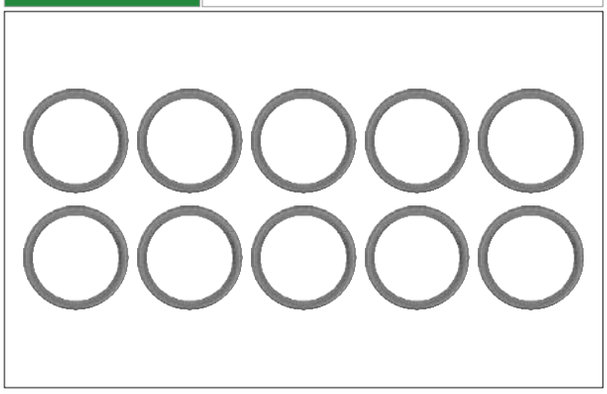

Caliper Cover Seal Repair Kit

OEM NUMBER	897 290 261 2

NR	CHEEFT NR	DESCRIPTIONS	DIMENSION	QTY
1	3582	SEAL		10

ORIGINAL PART NUMBERS,MARKS AND MODELS MENTIONED ARE ONLY FOR DESCRIPTION PURPOSES.

MAXX 22 TYPE

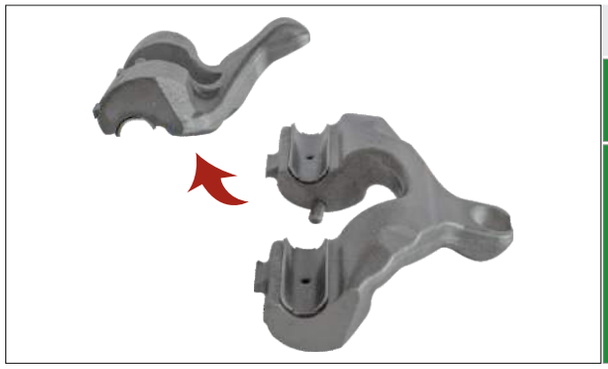

Caliper Lever (With Pin)

CHEEFT NUMBER	3131
OEM NUMBER	

Caliper Roller Bearing

CHEEFT NUMBER	3134
OEM NUMBER	

Caliper Push Plate Slotted (Right)

CHEEFT NUMBER	3128
OEM NUMBER	

Caliper Push Plate Slotted (Left)

CHEEFT NUMBER	3129
OEM NUMBER	

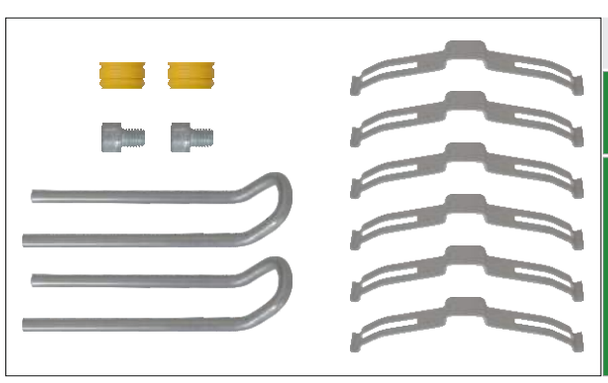

Caliper Pad Retainer Repair Kit

CHEEFT NUMBER	3256
OEM NUMBER	

ORIGINAL PART NUMBERS,MARKS AND MODELS MENTIONED ARE ONLY FOR DESCRIPTION PURPOSES.

MAXX 22 TYPE

Sensor Cover	
CHEEFT NUMBER	3267
OEM NUMBER	640 322 928 2 - 441 039 001 0 4811

MB Arcs - Actrs Type Sensor Cover (New Model)	
CHEEFT NUMBER	3190
OEM NUMBER	

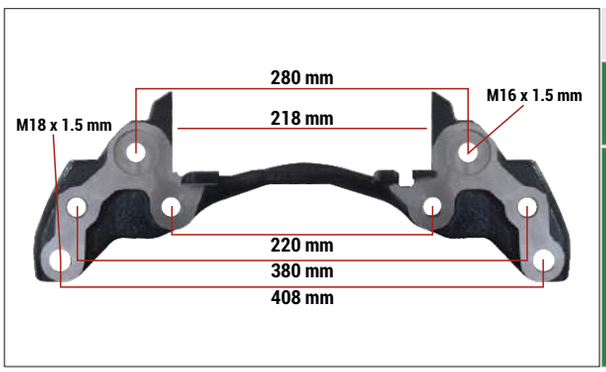

WBC Maxx 22 Caliper Carrier 22,5 Inch (Right)	
CHEEFT NUMBER	3263
OEM NUMBER	Right WBC MAXX 22

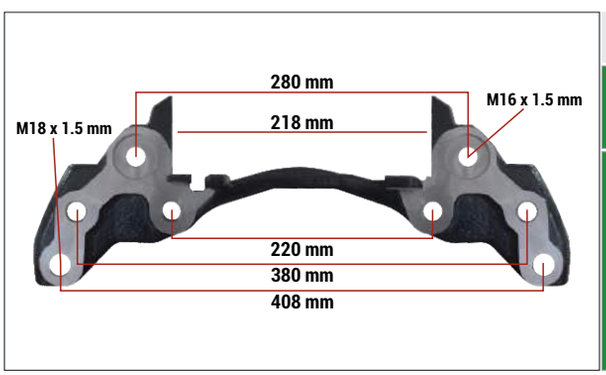

WBC Maxx 22 Caliper Carrier 22,5 Inch (Left)	
CHEEFT NUMBER	3264
OEM NUMBER	MN 81.50822.6040 WBC 640 322 928 2 - 441 039 001 0 4811

ORIGINAL PART NUMBERS,MARKS AND MODELS MENTIONED ARE ONLY FOR DESCRIPTION PURPOSES.

MAXX 22 TYPE

MN TGX SET (RIGHT)

CHEEFT NUMBER	CHS3005

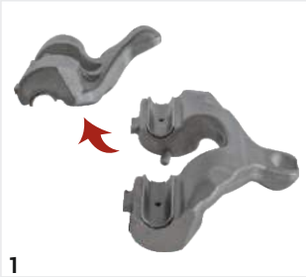

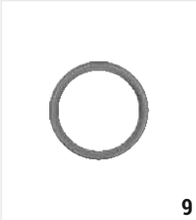

NR	CHEEFT NR	DESCRIPTIONS	QTY
1	3131	LEVER (WITH PIN)	1
2	3136	SEAL REPAR KIT	1
3	3137	PLUG REPAR KIT	1
4	3138	COVER	1
5	3140	GUIDES & SEALS REPAIR KIT	1
6	3141	ADJUSTING MECHANISM ASSEMBLY MN TGX	1
7	3134	ROLLER BEARING	1
8	3615	ROLLER	2
9	3582	SEAL	1
10	3128	PUSH PLATE SLOTTED (RIGHT)	1

MN TGX SET (LEFT)

CHEEFT NUMBER	CHS3008

NR	CHEEFT NR	DESCRIPTIONS	QTY
1	3131	LEVER (WITH PIN)	1
2	3136	SEAL REPAR KIT	1
3	3137	PLUG REPAR KIT	1
4	3138	COVER	1
5	3140	GUIDES & SEALS REPAIR KIT	1
6	3141	ADJUSTING MECHANISM ASSEMBLY MN TGX	1
7	3134	ROLLER BEARING	1
8	3615	ROLLER	2
9	3582	SEAL	1
10	3129	PUSH PLATE SLOTTED (LEFT)	1

ORIGINAL PART NUMBERS,MARKS AND MODELS MENTIONED ARE ONLY FOR DESCRIPTION PURPOSES.

MAXX 22 TYPE

MN TGS SET (RIGHT)

CHEEFT NUMBER: CHS3011

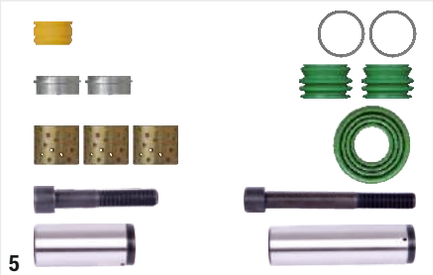
5

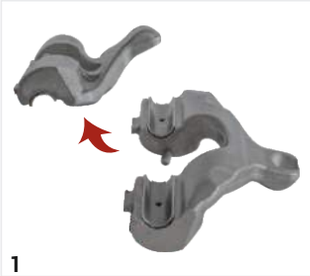
1

7

3

2

4

10

6

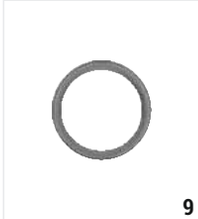
9

8

NR	CHEEFT NR	DESCRIPTIONS	QTY
1	3131	LEVER (WITH PIN)	1
2	3136	SEAL REPAR KIT	1
3	3137	PLUG REPAR KIT	1
4	3138	COVER	1
5	3140	GUIDES & SEALS REPAIR KIT	1
6	3142	ADJUSTING MECHANISM ASSEMBLY MN TGS	1
7	3134	ROLLER BEARING	1
8	3615	ROLLER	2
9	3582	SEAL	1
10	3128	PUSH PLATE SLOTTED (RIGHT)	1

MN TGS SET (LEFT)

CHEEFT NUMBER: CHS3012

5

1

7

3

2

4

10

6

9

8

NR	CHEEFT NR	DESCRIPTIONS	QTY
1	3131	LEVER (WITH PIN)	1
2	3136	SEAL REPAR KIT	1
3	3137	PLUG REPAR KIT	1
4	3138	COVER	1
5	3140	GUIDES & SEALS REPAIR KIT	1
6	3142	ADJUSTING MECHANISM ASSEMBLY MN TGS	1
7	3134	ROLLER BEARING	1
8	3615	ROLLER	2
9	3582	SEAL	1
10	3129	PUSH PLATE SLOTTED (LEFT)	1

ORIGINAL PART NUMBERS,MARKS AND MODELS MENTIONED ARE ONLY FOR DESCRIPTION PURPOSES.

COHEEFT®
AIR DISC BRAKE CALIPER REPAIR KITS

WBC

PAN 17 TYPE

Always the Best...

EAC CE UDEM JAS-ANZ ISO 9001 2015

COHEEFT®

AIR DISC BRAKE CALIPER REPAIR KITS

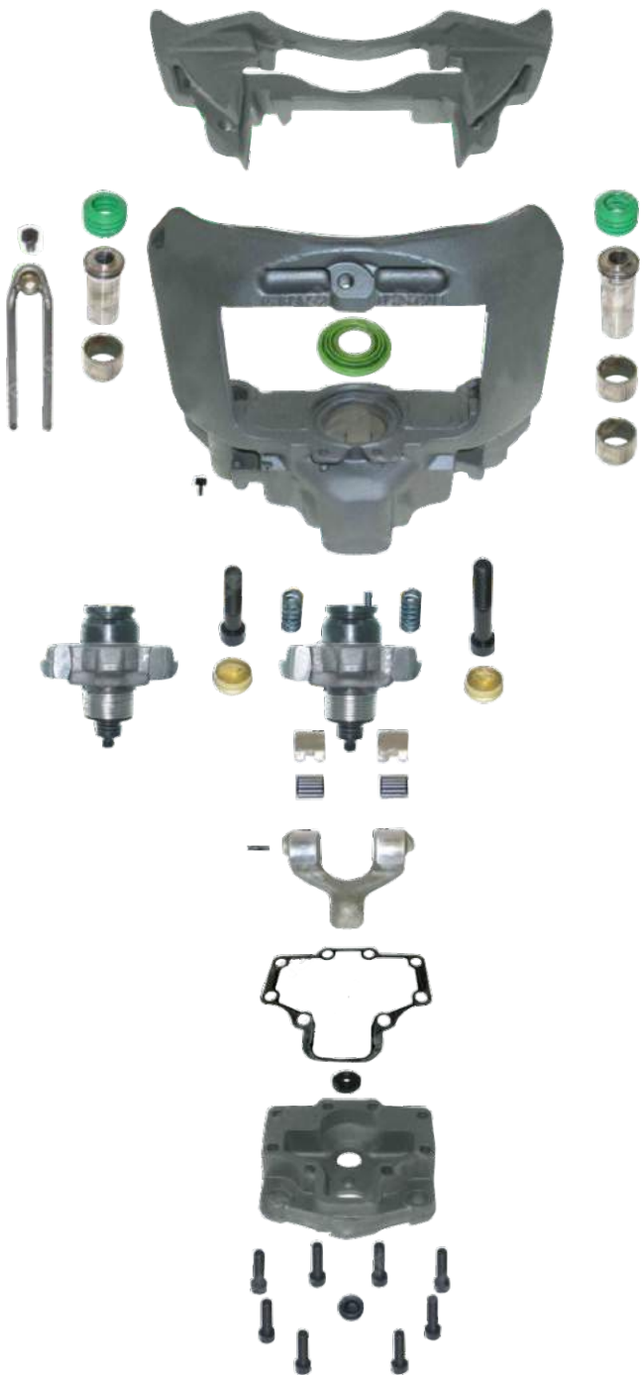

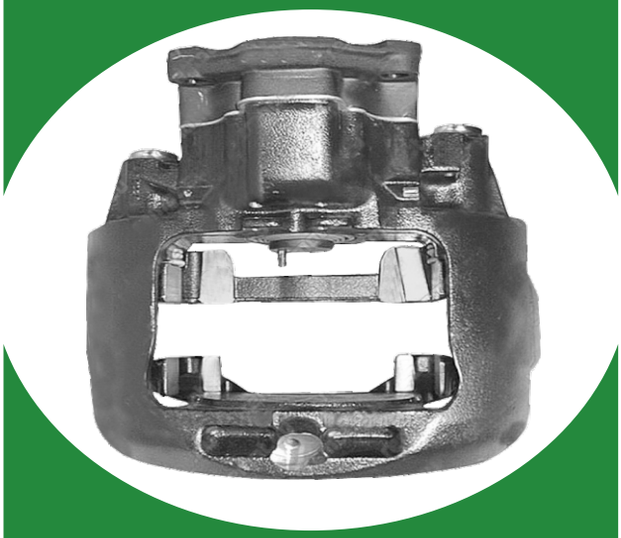

WBC

PAN 17 TYPE

Always the Best...

EAC CE UDEM JAS-ANZ ISO 9001 2015

PAN 17 TYPE

WBC

CHEEFT NUMBER	3143

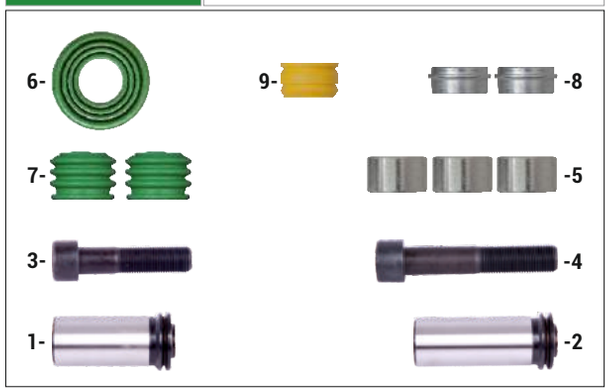

Caliper Guides & Seals Repair Kit (12.153 MN)

OEM NUMBER	WBC 12 999 699 - 12 999 702 DF 1436853 - IVECO 42536957 OTKR 13C3508276AA

NR	CHEEFT NR	DESCRIPTIONS	DIMENSION	QTY
1	3501	GUIDE PIN	Ø30 x 77,30 mm	1
2	3502	GUIDE PIN	Ø30 x 91 mm	1
3	1511	BOLT	M16 x 1,5 x 70 mm	1
4	3513	BOLT	M16 x 1,5 x 90 mm	1
5	1529	TEFLON BUSH	Ø34 x Ø30 x 20 mm	3
6	3531	BOLT DUST EXCLUDER		1
7	3532	GUIDE PIN GAITER		2
8	3541	STEEL CAP	Ø34 x 16 mm	2
9	3551	PLUG		1

CHEEFT NUMBER	3163

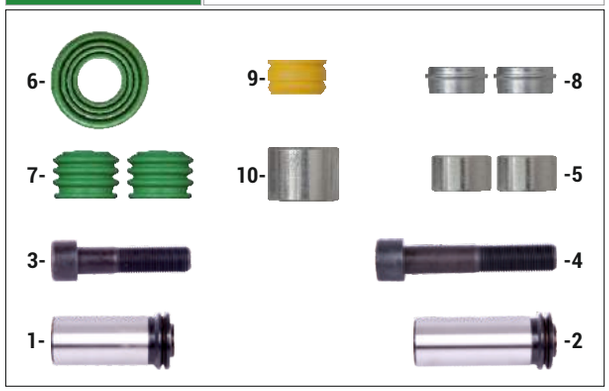

Caliper Guides & Seals Repair Kit (OTKR Sultan Bus)

OEM NUMBER	

NR	CHEEFT NR	DESCRIPTIONS	DIMENSION	QTY
1	3501	GUIDE PIN	Ø30 x 77,30 mm	1
2	3502	GUIDE PIN	Ø30 x 91 mm	1
3	1511	BOLT	M16 x 1,5 x 70 mm	1
4	3513	BOLT	M16 x 1,5 x 90 mm	1
5	1529	TEFLON BUSH	Ø34 x Ø30 x 20 mm	2
6	3531	BOLT DUST EXCLUDER		1
7	3532	GUIDE PIN GAITER		2
8	3541	STEEL CAP	Ø34 x 16 mm	2
9	3551	PLUG		1
10	3526	BUSH	Ø34 x Ø30 x 25 mm	1

ORIGINAL PART NUMBERS,MARKS AND MODELS MENTIONED ARE ONLY FOR DESCRIPTION PURPOSES.

PAN 17 TYPE

CHEEFT NUMBER	3144

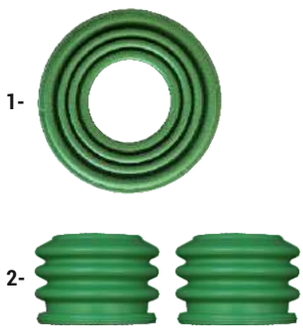

Caliper Seals & Boots Repair Kit

OEM NUMBER	

NR	CHEEFT NR	DESCRIPTIONS	DIMENSION	QTY
1	3531	BOLT DUST EXCLUDER		1
2	3532	GUIDE PIN GAITER		2

CHEEFT NUMBER	3169

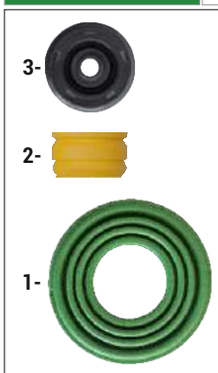

Caliper Seals Repair Kit

OEM NUMBER	

NR	CHEEFT NR	DESCRIPTIONS	DIMENSION	QTY
1	3531	BOLT DUST EXCLUDER		1
2	3551	PLUG		1
3	3552	SEAL		1

CHEEFT NUMBER	3254

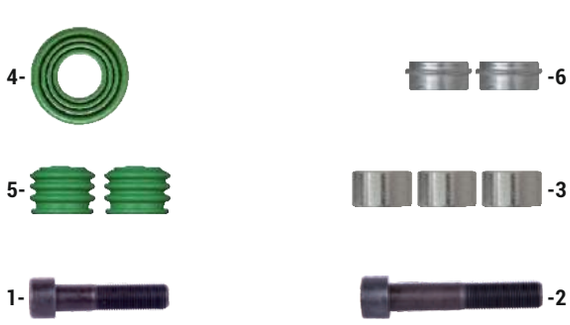

Caliper Repair Kit

OEM NUMBER	WBC 12 999 704 - DF 1519363 RNLT 5001 852 880

NR	CHEEFT NR	DESCRIPTIONS	DIMENSION	QTY
1	1511	BOLT	M16 x 1,5 x 70 mm	1
2	3513	BOLT	M16 x 1,5 x 90 mm	1
3	1529	TEFLON BUSH	Ø34 x Ø30 x 20 mm	3
4	3531	BOLT DUST EXCLUDER		1
5	3532	GUIDE PIN GAITER		2
6	3541	STEEL CAP	Ø34 x 16 mm	2

ORIGINAL PART NUMBERS,MARKS AND MODELS MENTIONED ARE ONLY FOR DESCRIPTION PURPOSES.

PAN 17 TYPE

WBC

CHEEFT NUMBER	3150

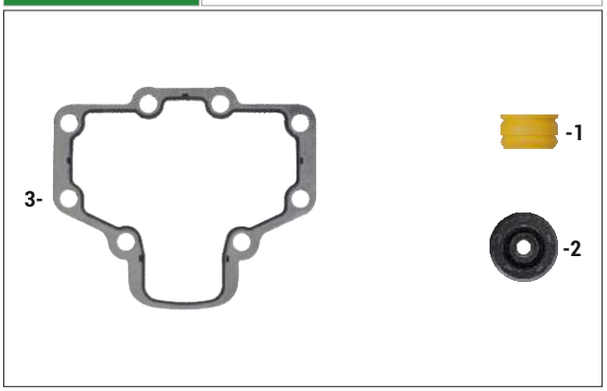

Caliper Gasket & Seals Repair Kit

OEM NUMBER	

NR	CHEEFT NR	DESCRIPTIONS	DIMENSION	QTY
1	3551	PLUG		1
2	3552	SEAL		1
3	3553	COVER GASKET		1

CHEEFT NUMBER	3170

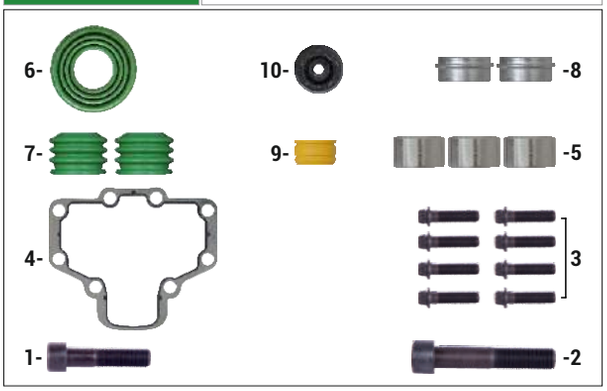

Caliper Bolts, Seals & Gasket Repair Kit

OEM NUMBER	WBC 12 999 580 - MN 81.50822.6003 DF 1517407

NR	CHEEFT NR	DESCRIPTIONS	DIMENSION	QTY
1	1511	BOLT	M16 x 1,5 x 70 mm	1
2	3513	BOLT	M16 x 1,5 x 90 mm	1
3	3515	COVER BOLT	M10 x 1 x 40 mm	8
4	3553	COVER GASKET		1
5	1529	TEFLON BUSH	Ø34 x Ø30 x 20 mm	3
6	3531	BOLT DUST EXCLUDER		1
7	3532	GUIDE PIN GAITER		2
8	3541	STEEL CAP	Ø34 x 16 mm	2
9	3551	PLUG		1
10	3552	SEAL		1

CHEEFT NUMBER	3252

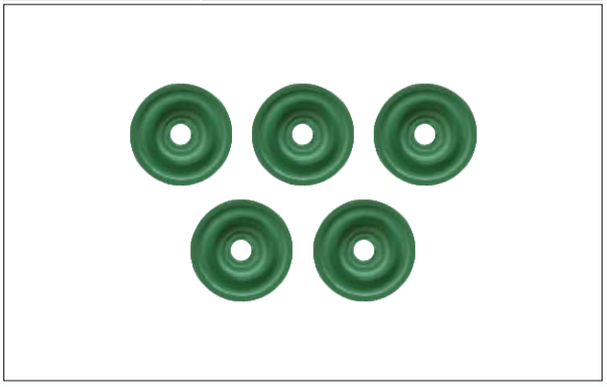

Caliper Seal Kit

OEM NUMBER	

NR	CHEEFT NR	DESCRIPTIONS	DIMENSION	QTY
1	3550	SEAL		5

ORIGINAL PART NUMBERS,MARKS AND MODELS MENTIONED ARE ONLY FOR DESCRIPTION PURPOSES.

PAN 17 TYPE

CHEEFT NUMBER	3166

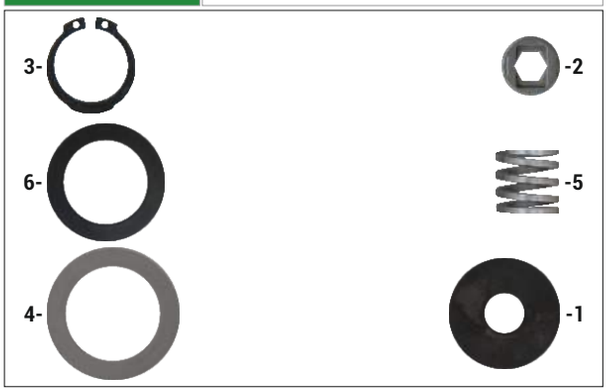

Caliper Washers & Circlips Repair Kit

OEM NUMBER	

NR	CHEEFT NR	DESCRIPTIONS	DIMENSION	QTY
1	3554	WASHER	Ø41,4 x Ø14,25 mm	1
2	3555	SPRING WASHER		1
3	3556	CIRCLIP		1
4	3557	WASHER	Ø49,4 x Ø35,5 mm	1
5	3566	SPRING	Ø22,30 x 22,15 mm	1
6	3558	WASHER	Ø45 x Ø32 mm	1

CHEEFT NUMBER	3167

Caliper Adjusting Mechanism Support

OEM NUMBER	

NR	CHEEFT NR	DESCRIPTIONS	DIMENSION	QTY
1	3567	SPRING	Ø20,5 x 41 mm	2
2	3571	MECHANISM SUPPORT		1

CHEEFT NUMBER	3172

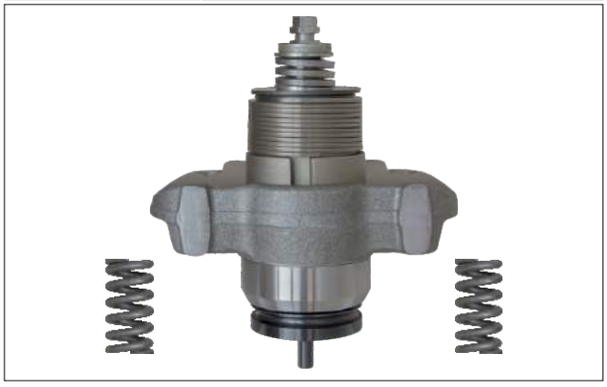

Adjusting Mechanism Assembly (12.153 MN OTKR Sultan)

OEM NUMBER	

NR	CHEEFT NR	DESCRIPTIONS	DIMENSION	QTY
1	3145	ADJUSTING MECHANISM		1
2	3166	WASHERS & CIRCLIPS REPAIR KIT		1
3	3167	ADJUSTING MECHANISM SUPPORT		1

ORIGINAL PART NUMBERS,MARKS AND MODELS MENTIONED ARE ONLY FOR DESCRIPTION PURPOSES.

PAN 17 TYPE

CHEEFT NUMBER	3145

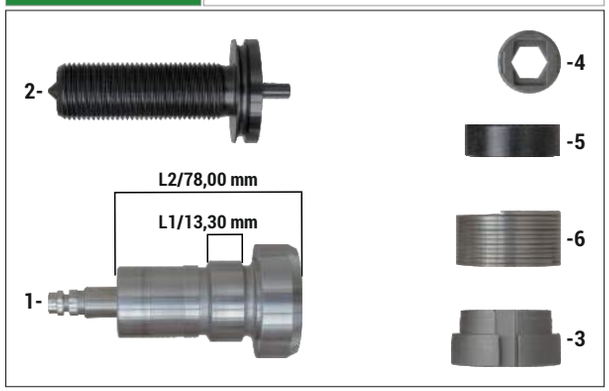

Caliper Adjusting Mechanism

OEM NUMBER	

NR	CHEEFT NR	DESCRIPTIONS	DIMENSION	QTY
1	3561	ADJUSTER SLEEVE	L1 = 13,30 mm L2 = 78,00 mm	1
2	3146	CALIBRATION BOLT (SHORT PIN)		1
3	3563	SPRING PLUG		1
4	3555	SPRING WASHER		1
5	3564	SPRING RETAINER		1
6	3565	SPRING	Ø42,5 x 22 mm	1

CHEEFT NUMBER	3268

Caliper Bushes Kit

OEM NUMBER	

NR	CHEEFT NR	DESCRIPTIONS	DIMENSION	QTY
1	3526	BUSH	Ø34 x Ø30 x 25 mm	10

CHEEFT NUMBER	3213

Steel Cap Kit

OEM NUMBER	

NR	CHEEFT NR	DESCRIPTIONS	DIMENSION	QTY
1	3575	STEEL CAP	Ø34,5 x 38,5 mm	5

ORIGINAL PART NUMBERS,MARKS AND MODELS MENTIONED ARE ONLY FOR DESCRIPTION PURPOSES.

PAN 17 TYPE

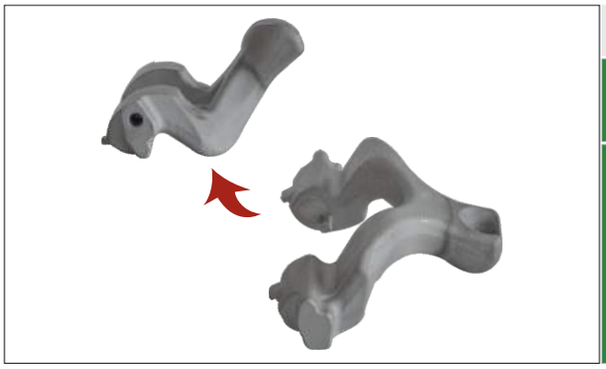

Caliper Lever (With Pin)	
CHEEFT NUMBER	3149
OEM NUMBER	

Caliper Push Plate Slotted (Left)	
CHEEFT NUMBER	3151
OEM NUMBER	

Caliper Push Plate Slotted (Right)	
CHEEFT NUMBER	3152
OEM NUMBER	

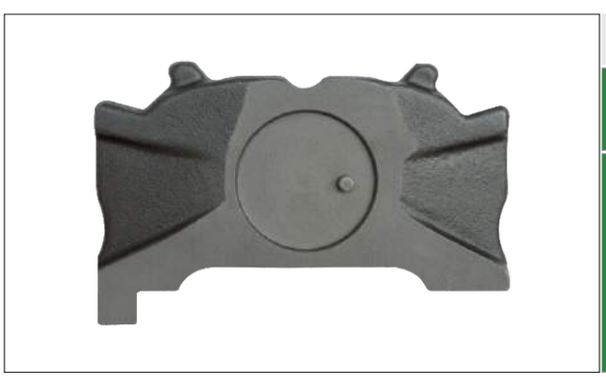

Caliper Push Plate With Pin (Left)	
CHEEFT NUMBER	3153
OEM NUMBER	

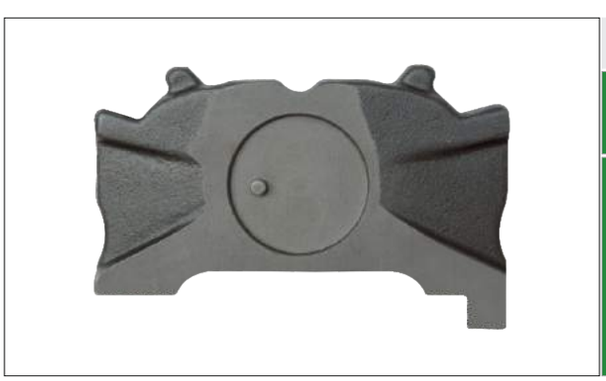

Caliper Push Plate With Pin (Right)	
CHEEFT NUMBER	3154
OEM NUMBER	

ORIGINAL PART NUMBERS,MARKS AND MODELS MENTIONED ARE ONLY FOR DESCRIPTION PURPOSES.

WBC

PAN 17 TYPE

Caliper Calibration Bolt (With Short Pin)

CHEEFT NUMBER	3146
OEM NUMBER	

Caliper Calibration Bolt (Slotted)

CHEEFT NUMBER	3147
OEM NUMBER	

Caliper Roller Bearings

CHEEFT NUMBER	3148
OEM NUMBER	

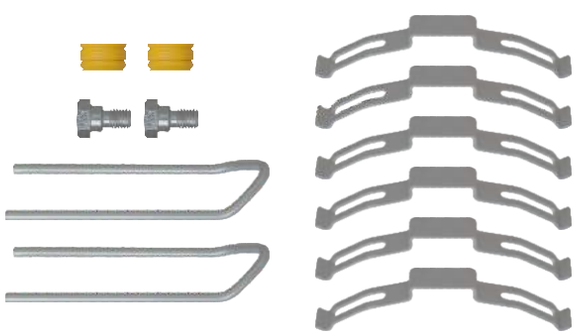

Caliper Pad Retainer Repair Kit

CHEEFT NUMBER	3178
OEM NUMBER	

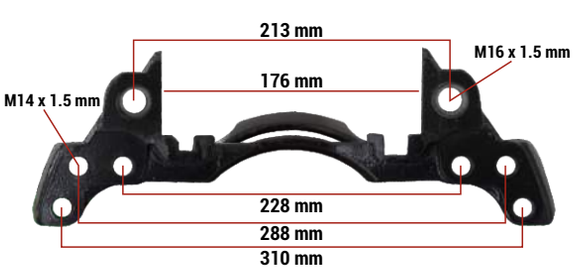

WBC Pan 17 Caliper Carrier 17,5 Inch (Right)

CHEEFT NUMBER	3259
OEM NUMBER	MN 81.50804.6355 - 81.50804.6087 81.50804.6071 - 81.50804.9071 81.50804.9087 - 81.50804.6089 - 1505372 81.50804.6070 - 81.50804.9070 81.50804.6354 - 81.50804.9088 - 1505373 IVECO 40175050

ORIGINAL PART NUMBERS,MARKS AND MODELS MENTIONED ARE ONLY FOR DESCRIPTION PURPOSES.

PAN 17 TYPE

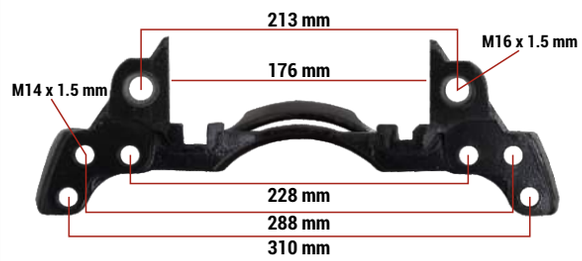

WBC Pan 17 Caliper Carrier 17,5 Inch (Left)	
CHEEFT NUMBER	3260
OEM NUMBER	MN 81.50804.6355 - 81.50804.6087 81.50804.6071 - 81.50804.9071 81.50804.9087 - 81.50804.6089 - 1505372 81.50804.6070 - 81.50804.9070 81.50804.6354 -81.50804.9088 - 1505373 IVECO 40175050

ORIGINAL PART NUMBERS,MARKS AND MODELS MENTIONED ARE ONLY FOR DESCRIPTION PURPOSES.

PAN 17 TYPE

12-153 MN SET (RIGHT)

CHEEFT NUMBER	CHS3001

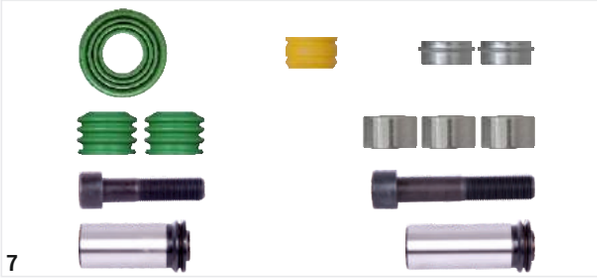

NR	CHEEFT NR	DESCRIPTIONS	QTY
1	3152	PUSH PLATE SLOTTED (RIGHT)	1
2	3553	COVER GASKET	1
3	3552	SEAL	1
4	3515	COVER BOLT	8
5	3172	ADJUSTING MECHANISM ASSEMBLY	1
6	3148	ROLLER BEARINGS	1
7	3143	GUIDES & SEALS REPAIR KIT	1
8	3149	LEVER (WITH PIN)	1

12-153 MN SET (LEFT)

CHEEFT NUMBER	CHS3002

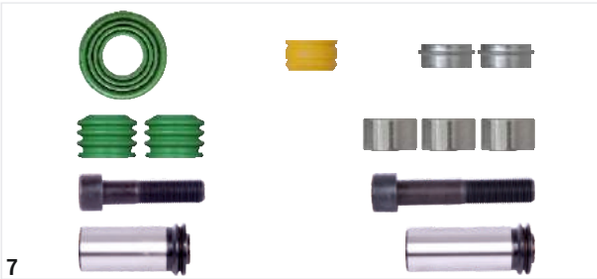

NR	CHEEFT NR	DESCRIPTIONS	QTY
1	3151	PUSH PLATE SLOTTED (LEFT)	1
2	3553	COVER GASKET	1
3	3552	SEAL	1
4	3515	COVER BOLT	8
5	3172	ADJUSTING MECHANISM ASSEMBLY	1
6	3148	ROLLER BEARINGS	1
7	3143	GUIDES & SEALS REPAIR KIT	1
8	3149	LEVER (WITH PIN)	1

ORIGINAL PART NUMBERS,MARKS AND MODELS MENTIONED ARE ONLY FOR DESCRIPTION PURPOSES.

C-HEEFT®

AIR DISC BRAKE CALIPER REPAIR KITS

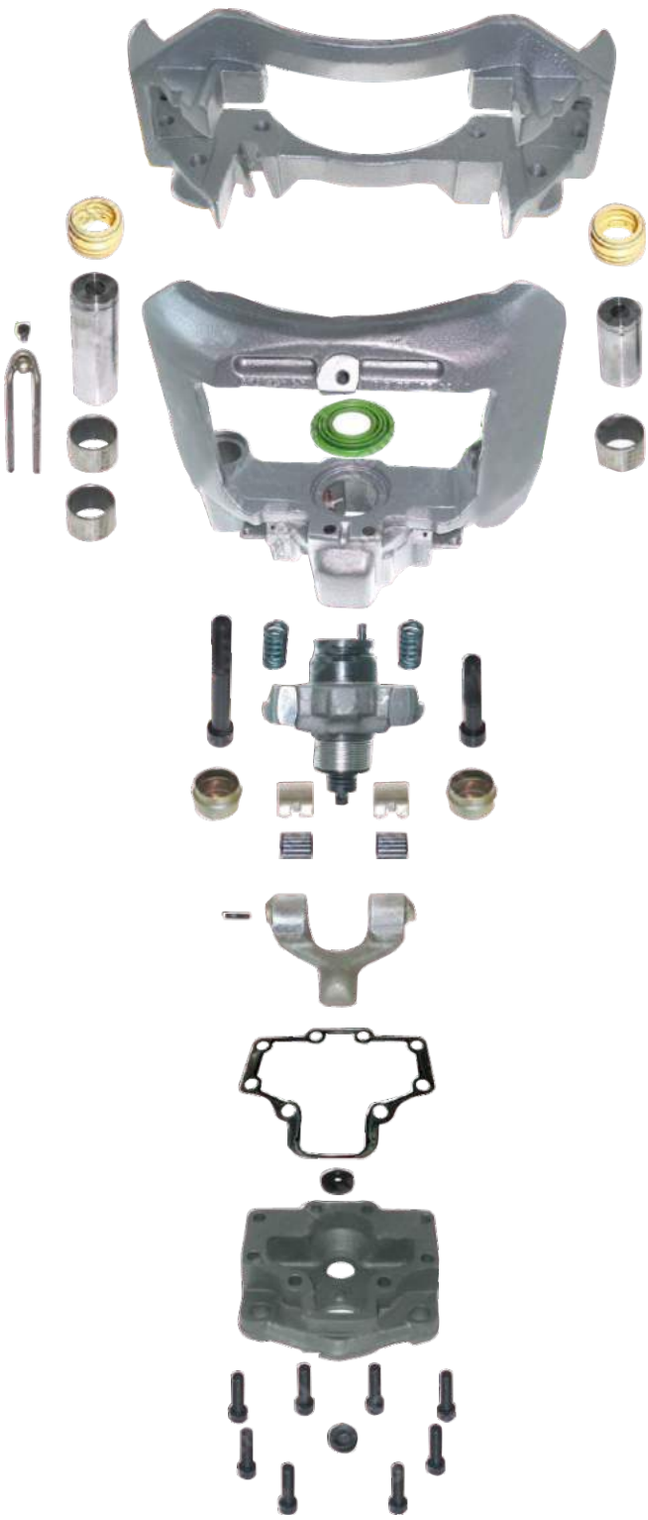

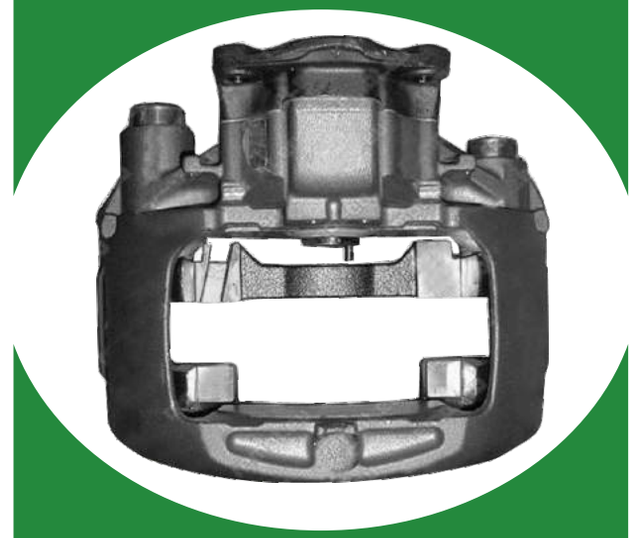

WBC

WBC

PAN 19-1/22-1 TYPE

Always the Best...

EAC CE UDEM JAS-ANZ ISO 9001 2015

PAN 19-1/22-1 TYPE

CHEEFT NUMBER	3155

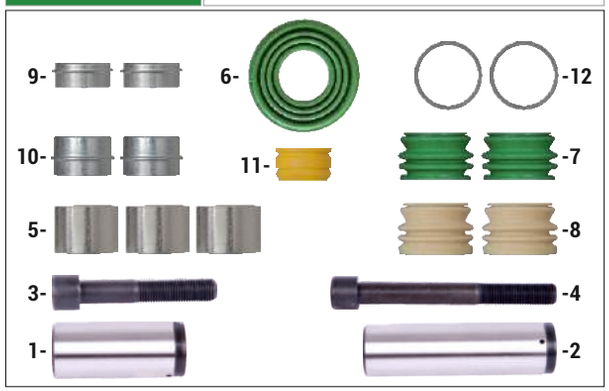

Caliper Guides & Seals Repair Kit

OEM NUMBER	WBC 12 999 738 - DF 1505890 SF 3 434 3827 01

NR	CHEEFT NR	DESCRIPTIONS	DIMENSION	QTY
1	3503	GUIDE PIN	Ø37,70 x 76 mm	1
2	3504	GUIDE PIN	Ø38 x 118 mm	1
3	1513	BOLT	M16 x 1,5 x 80 mm	1
4	3514	BOLT	M16 x 1,5 x 120 mm	1
5	3522	TEFLON BUSH	Ø42 x Ø38 x 30 mm	3
6	3531	BOLT DUST EXCLUDER		1
7	3533	GUIDE PIN GAITER		2
8	3534	GUIDE PIN GAITER		2
9	3542	STEEL CAP	Ø42,5 x 17 mm	2
10	3543	STEEL CAP	Ø42,5 x 29 mm	2
11	3551	PLUG		1
12	3544	RING	Ø44,5 x 1,25 mm	2

CHEEFT NUMBER	3156

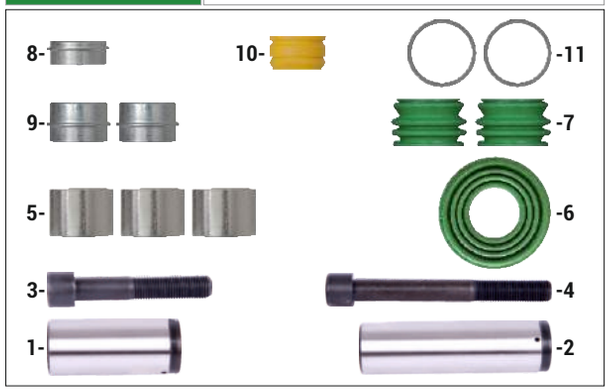

Caliper Guides & Seals Repair Kit

OEM NUMBER	WBC 12 999 776 - DF 1628065 SF 3 434 3828 00 - VLV 85108166 RNLT 5001 866 626 - KGL 6500700

NR	CHEEFT NR	DESCRIPTIONS	DIMENSION	QTY
1	3503	GUIDE PIN	Ø37,70 x 76 mm	1
2	3504	GUIDE PIN	Ø38 x 118 mm	1
3	1513	BOLT	M16 x 1,5 x 80 mm	1
4	3514	BOLT	M16 x 1,5 x 120 mm	1
5	3522	TEFLON BUSH	Ø42 x Ø38 x 30 mm	3
6	3531	BOLT DUST EXCLUDER		1
7	3533	GUIDE PIN GAITER		2
8	3542	STEEL CAP	Ø42,5 x 17 mm	1
9	3543	STEEL CAP	Ø42,5 x 29 mm	2
10	3551	PLUG		1
11	3544	RING	Ø44,5 x 1,25 mm	2

CHEEFT NUMBER	3185

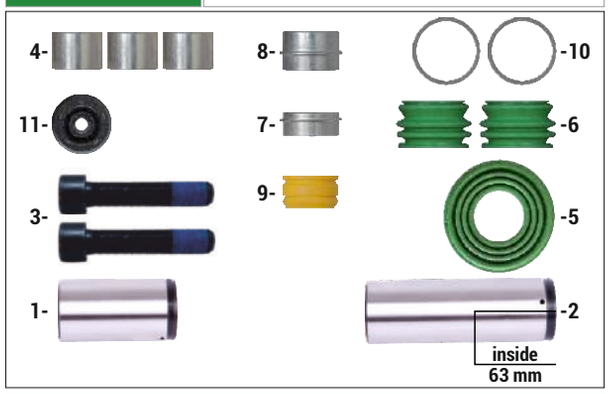

Caliper Guides & Seals Repair Kit (New Model)

OEM NUMBER	640 225 921 2 - OTHER 230302377

NR	CHEEFT NR	DESCRIPTIONS	DIMENSION	QTY
1	3503	GUIDE PIN	Ø37,70 x 76 mm	1
2	3511	GUIDE PIN	Ø38 x 63/118 mm	1
3	3512	BOLT	M16 x 1,5 x 80 mm	2
4	3527	BUSH	Ø42 x Ø38 x 30 mm	3
5	3531	BOLT DUST EXCLUDER		1
6	3533	GUIDE PIN GAITER		2
7	3542	STEEL CAP	Ø42,5 x 17 mm	1
8	3543	STEEL CAP	Ø42,5 x 29 mm	1
9	3551	PLUG		1
10	3544	RING		2
11	3552	SEAL		1

ORIGINAL PART NUMBERS,MARKS AND MODELS MENTIONED ARE ONLY FOR DESCRIPTION PURPOSES.

PAN 19-1/22-1 TYPE

CHEEFT NUMBER	3174

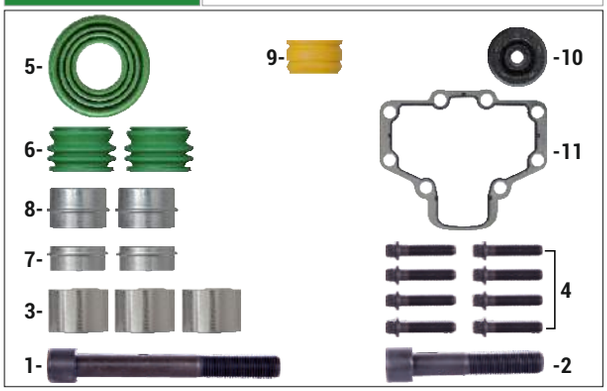

Caliper Bolts, Seals & Gasket Repair Kit

OEM NUMBER	

NR	CHEEFT NR	DESCRIPTIONS	DIMENSION	QTY
1	3514	BOLT	M16 x 1,5 x 120 mm	1
2	1513	BOLT	M16 x 1,5 x 80 mm	1
3	3522	TEFLON BUSH	Ø42 x Ø38 x 30 mm	3
4	3515	COVER BOLT	M10 x 1 x 40 mm	8
5	3531	BOLT DUST EXCLUDER		1
6	3533	GUIDE PIN GAITER		2
7	3542	STEEL CAP	Ø42,5 x 17 mm	2
8	3543	STEEL CAP	Ø42,5 x 29 mm	2
9	3551	PLUG		1
10	3552	SEAL		1
11	3553	COVER GASKET		1

CHEEFT NUMBER	3160

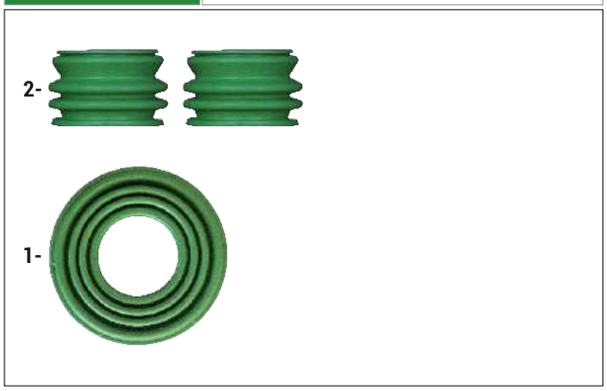

Caliper Seals & Boots Repair Kit

OEM NUMBER	

NR	CHEEFT NR	DESCRIPTIONS	DIMENSION	QTY
1	3531	BOLT DUST EXCLUDER		1
2	3533	GUIDE PIN GAITER		2

CHEEFT NUMBER	3169

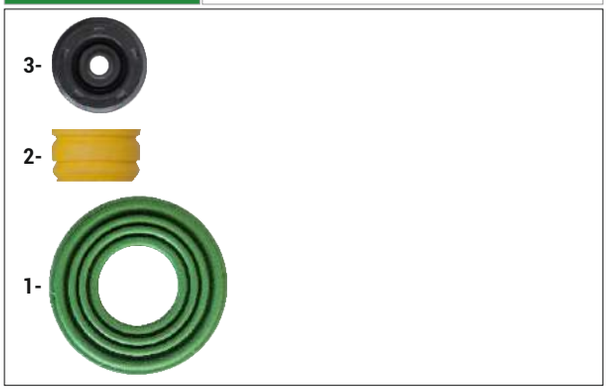

Caliper Seals Repair Kit

OEM NUMBER	

NR	CHEEFT NR	DESCRIPTIONS	DIMENSION	QTY
1	3531	BOLT DUST EXCLUDER		1
2	3551	PLUG		1
3	3552	SEAL		1

ORIGINAL PART NUMBERS,MARKS AND MODELS MENTIONED ARE ONLY FOR DESCRIPTION PURPOSES.

PAN 19-1/22-1 TYPE

CHEEFT NUMBER	3173

Caliper Adjusting Mechanism Assembly

OEM NUMBER	

NR	CHEEFT NR	DESCRIPTIONS	DIMENSION	QTY
1	3157	ADJUSTING MECHANISM		1
2	3166	WASHERS & CIRCLIPS REPAIR KIT		1
3	3168	ADJUSTING MECHANISM SUPPORT		1

CHEEFT NUMBER	3157

Caliper Adjusting Mechanism

OEM NUMBER	

NR	CHEEFT NR	DESCRIPTIONS	DIMENSION	QTY
1	3562	ADJUSTER SLEEVE	L1 = 18,80 mm L2 = 83,50 mm	1
2	3165	CALIBRATION BOLT (LONG PIN)		1
3	3563	SPRING PLUG		1
4	3555	SPRING WASHER		1
5	3564	SPRING RETAINER		1
6	3565	SPRING	Ø42,5 x 22 mm	1

CHEEFT NUMBER	3168

Caliper Adjusting Mechanism Support

OEM NUMBER	

NR	CHEEFT NR	DESCRIPTIONS	DIMENSION	QTY
1	3567	SPRING	Ø20,5 x 41 mm	2
2	3572	MECHANISM SUPPORT		1

ORIGINAL PART NUMBERS,MARKS AND MODELS MENTIONED ARE ONLY FOR DESCRIPTION PURPOSES.

PAN 19-1/22-1 TYPE

CHEEFT NUMBER	3166

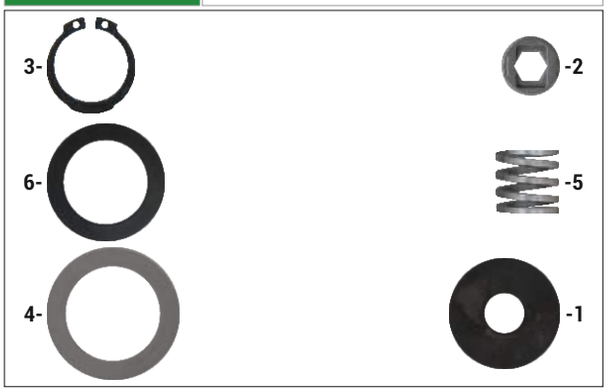

Caliper Washers & Circlips Repair Kit

OEM NUMBER	

NR	CHEEFT NR	DESCRIPTIONS	DIMENSION	QTY
1	3554	WASHER	Ø41,4 x Ø14,25 mm	1
2	3555	SPRING WASHER		1
3	3556	CIRCLIP		1
4	3557	WASHER	Ø49,4 x Ø35,5 mm	1
5	3566	SPRING	Ø22,30 x 22,15 mm	1
6	3558	WASHER	Ø45 x Ø32 mm	1

CHEEFT NUMBER	3150

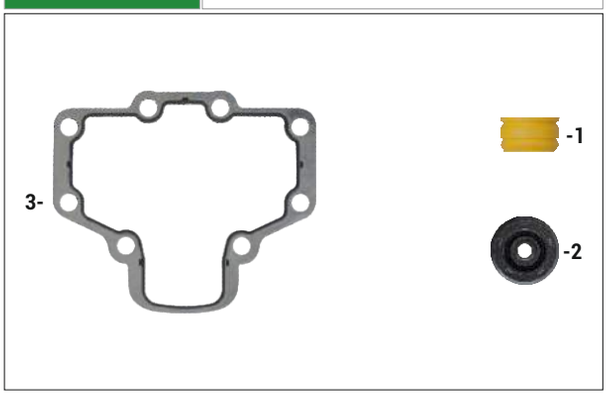

Caliper Gasket & Seals Repair Kit

OEM NUMBER	

NR	CHEEFT NR	DESCRIPTIONS	DIMENSION	QTY
1	3551	PLUG		1
2	3552	SEAL		1
3	3553	COVER GASKET		1

CHEEFT NUMBER	3171

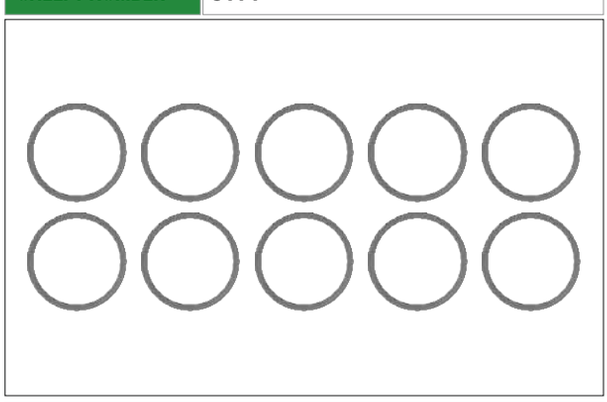

Caliper Ring Kit

OEM NUMBER	

NR	CHEEFT NR	DESCRIPTIONS	DIMENSION	QTY
1	3544	RING	Ø44,5 x 1,25 mm	10

ORIGINAL PART NUMBERS,MARKS AND MODELS MENTIONED ARE ONLY FOR DESCRIPTION PURPOSES.

PAN 19-1/22-1 TYPE

CHEEFT NUMBER	3164

Caliper Steel Cap Kit

OEM NUMBER	

NR	CHEEFT NR	DESCRIPTIONS	DIMENSION	QTY
1	3599	STEEL CAP	Ø42,20/47,50 x 40 x 33 mm	6

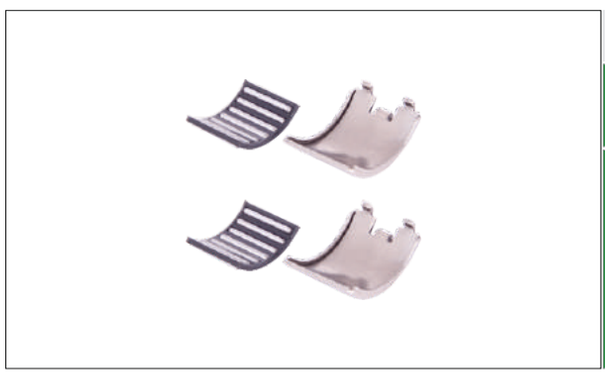

Caliper Roller Bearings

CHEEFT NUMBER	3148
OEM NUMBER	

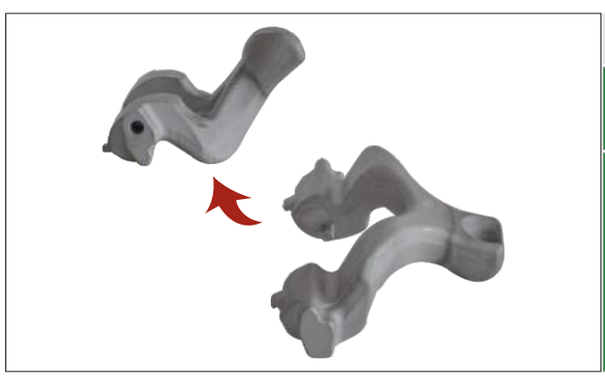

Caliper Lever (With Pin)

CHEEFT NUMBER	3149
OEM NUMBER	

ORIGINAL PART NUMBERS,MARKS AND MODELS MENTIONED ARE ONLY FOR DESCRIPTION PURPOSES.

PAN 19-1/22-1 TYPE

Caliper Push Plate Slotted (Left - PAN19)	
CHEEFT NUMBER	3158
OEM NUMBER	

Caliper Push Plate Slotted (Right - PAN19)	
CHEEFT NUMBER	3159
OEM NUMBER	

Caliper Push Plate Slotted (Left)	
CHEEFT NUMBER	3161
OEM NUMBER	

Caliper Push Plate Slotted (Right)	
CHEEFT NUMBER	3162
OEM NUMBER	

Caliper Calibration Bolt (With Long Pin)	
CHEEFT NUMBER	3165
OEM NUMBER	

ORIGINAL PART NUMBERS,MARKS AND MODELS MENTIONED ARE ONLY FOR DESCRIPTION PURPOSES.

PAN 19-1/22-1 TYPE

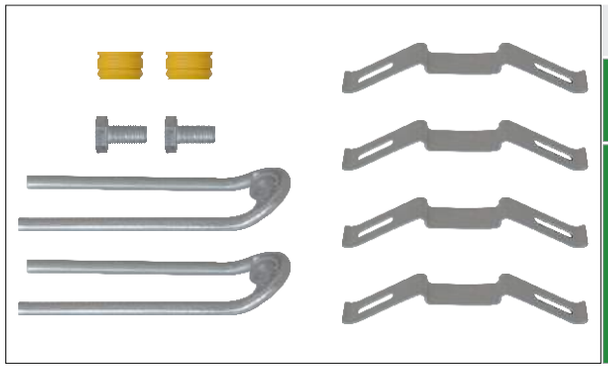

Caliper Pad Retainer Repair Kit

CHEEFT NUMBER	3175
OEM NUMBER	

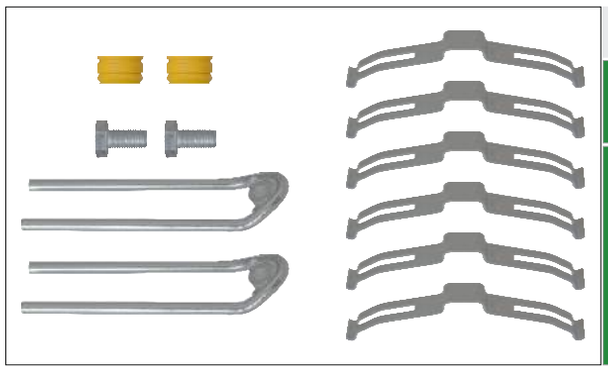

Caliper Pad Retainer Repair Kit

CHEEFT NUMBER	3177
OEM NUMBER	

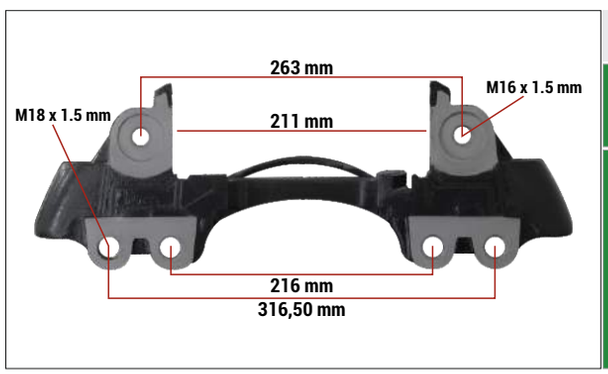

WBC Pan 22 Caliper Carrier 22,5 Inch (Right)

CHEEFT NUMBER	3261
OEM NUMBER	WBC 640 195 069 0 - 640 195 075 0 SF 3 080 0072 21 - 3 080 0074 20 Right SF Trailer Axle - 4 Hole

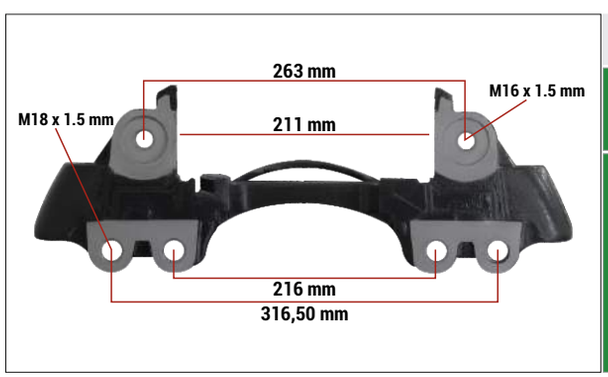

WBC Pan 22 Caliper Carrier 22,5 Inch (Left)

CHEEFT NUMBER	3262
OEM NUMBER	WBC 640 195 068 0 - 640 195 074 0 SF 3 080 0071 21 - 3 080 0073 20 Left SF Trailer Axle - 4 Hole

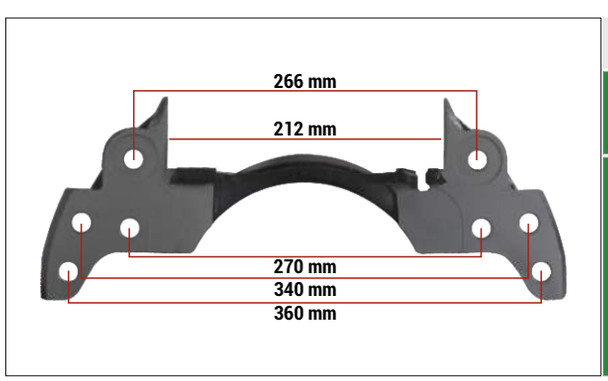

WBC Pan 19 Caliper Carrier (Right)

CHEEFT NUMBER	3265
OEM NUMBER	

ORIGINAL PART NUMBERS,MARKS AND MODELS MENTIONED ARE ONLY FOR DESCRIPTION PURPOSES.

PAN 19-1/22-1 TYPE

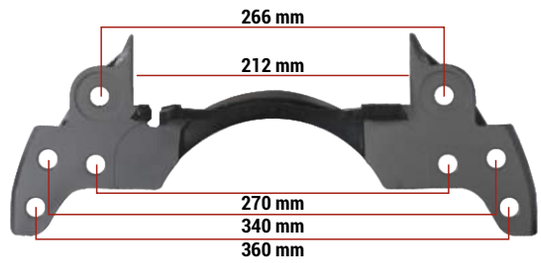

WBC Pan 19 Caliper Carrier (Left)

CHEEFT NUMBER	3266
OEM NUMBER	

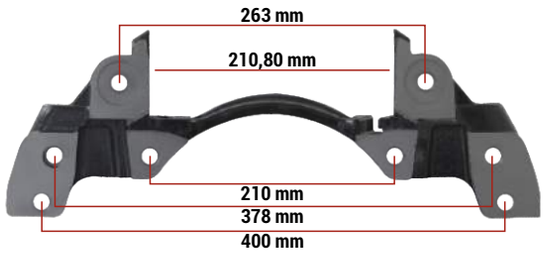

WBC Pan 22 Caliper Carrier 22,5 Inch (Right)

CHEEFT NUMBER	3269
OEM NUMBER	RIGHT WBC PAN 22

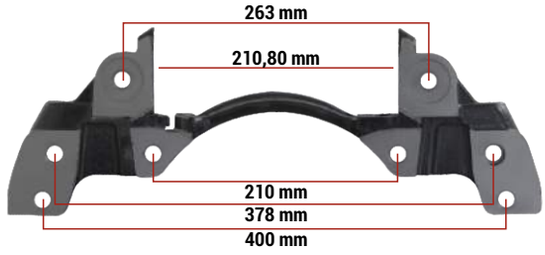

WBC Pan 22 Caliper Carrier 22,5 Inch (Left)

CHEEFT NUMBER	3270
OEM NUMBER	LEFT WBC PAN 22

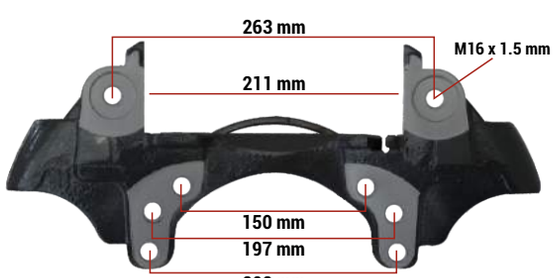

WBC Caliper Carrier VLX AXLE (Right)

CHEEFT NUMBER	3275
OEM NUMBER	WBC 6402250310

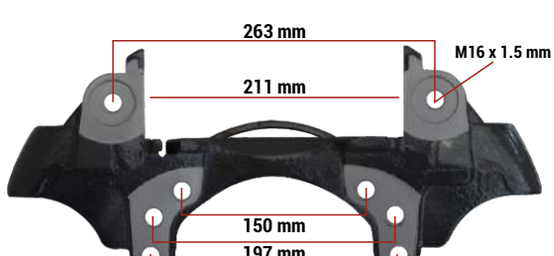

WBC Caliper Carrier VLX AXLE (Left)

CHEEFT NUMBER	3276
OEM NUMBER	WBC 6402250300

ORIGINAL PART NUMBERS,MARKS AND MODELS MENTIONED ARE ONLY FOR DESCRIPTION PURPOSES.

PAN 19-1/22-1 TYPE

CHEEFT NUMBER	1158

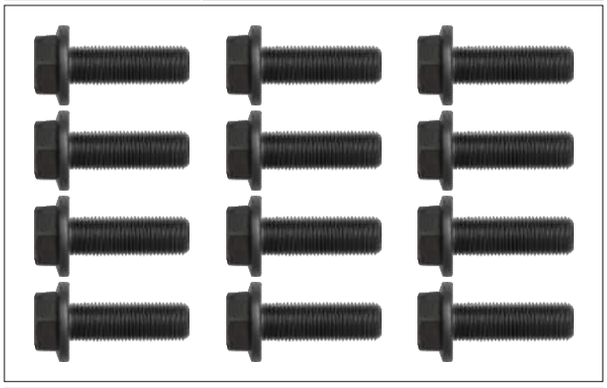

Caliper Connecting Bolt Kit

OEM NUMBER	

NR	CHEEFT NR	DESCRIPTIONS	DIMENSION	QTY
1	1665	BOLT	M16 x 1,5 x 50 mm	12

ORIGINAL PART NUMBERS,MARKS AND MODELS MENTIONED ARE ONLY FOR DESCRIPTION PURPOSES.

PAN 19-1/22-1 TYPE

SF AXLE SET (RIGHT)

CHEEFT NUMBER	CHS3003

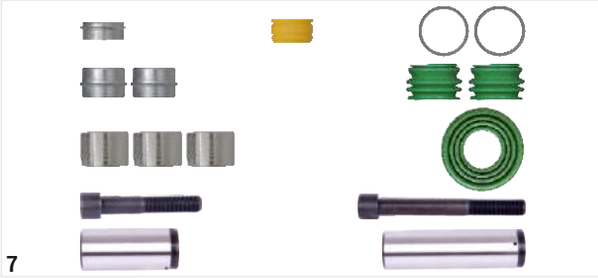

NR	CHEEFT NR	DESCRIPTIONS	QTY
1	3159	PUSH PLATE (RIGHT PAN 19)	1
2	3553	COVER GASKET	1
3	3552	SEAL	1
4	3515	COVER BOLT	8
5	3173	ADJUSTING MECHANISM ASSEMBLY (SF AXLE)	1
6	3148	ROLLER BEARINGS	1
7	3156	GUIDES & SEALS REPAIR KIT	1
8	3149	LEVER (WITH PIN)	1

SF AXLE SET (LEFT)

CHEEFT NUMBER	CHS3004

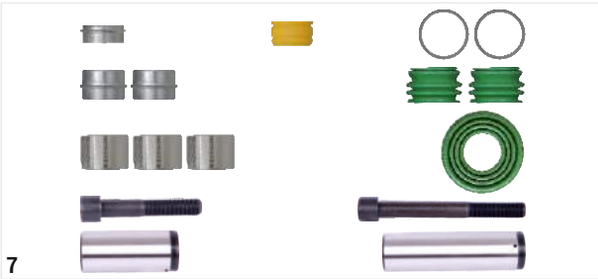

NR	CHEEFT NR	DESCRIPTIONS	QTY
1	3158	PUSH PLATE (LEFT PAN 19)	1
2	3553	COVER GASKET	1
3	3552	SEAL	1
4	3515	COVER BOLT	8
5	3173	ADJUSTING MECHANISM ASSEMBLY (SF AXLE)	1
6	3148	ROLLER BEARINGS	1
7	3156	GUIDES & SEALS REPAIR KIT	1
8	3149	LEVER (WITH PIN)	1

ORIGINAL PART NUMBERS,MARKS AND MODELS MENTIONED ARE ONLY FOR DESCRIPTION PURPOSES.

WBC

COHEEFT®
AIR DISC BRAKE CALIPER REPAIR KITS

WBC

PAN 19-2/22-2 TYPE

Always the Best...

COHEEFT®

AIR DISC BRAKE CALIPER REPAIR KITS

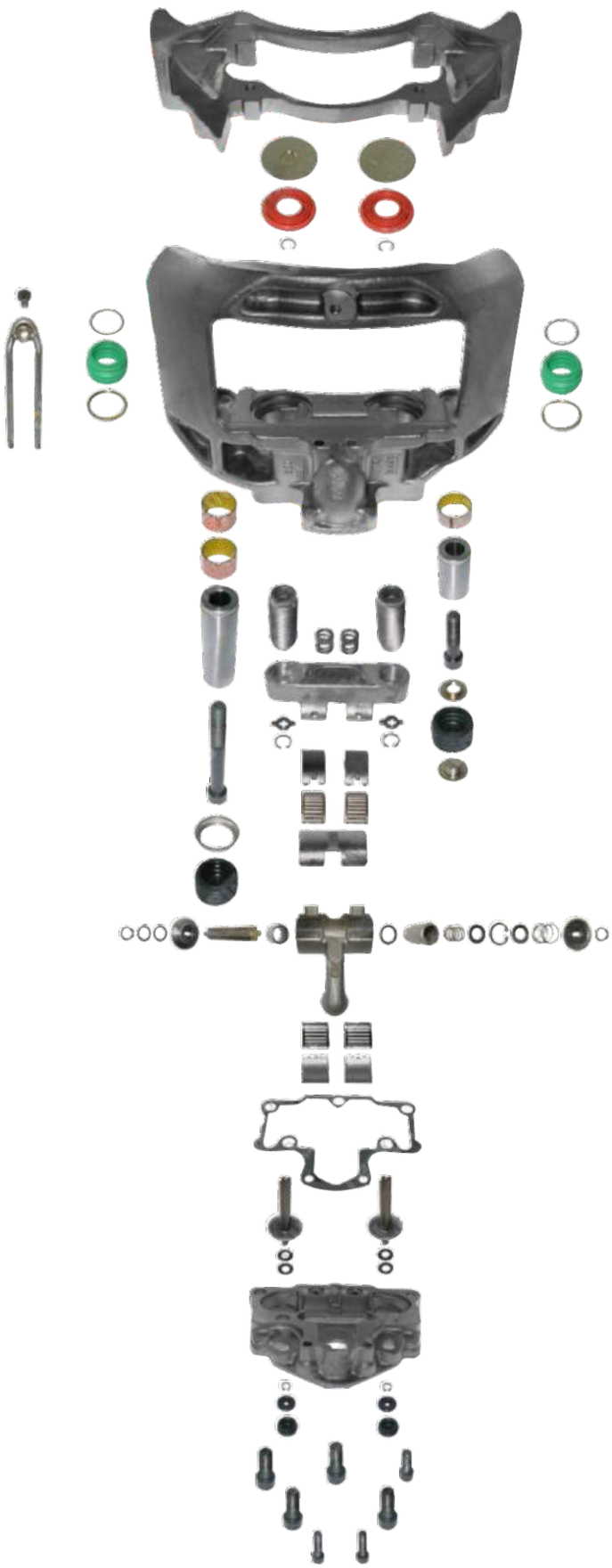

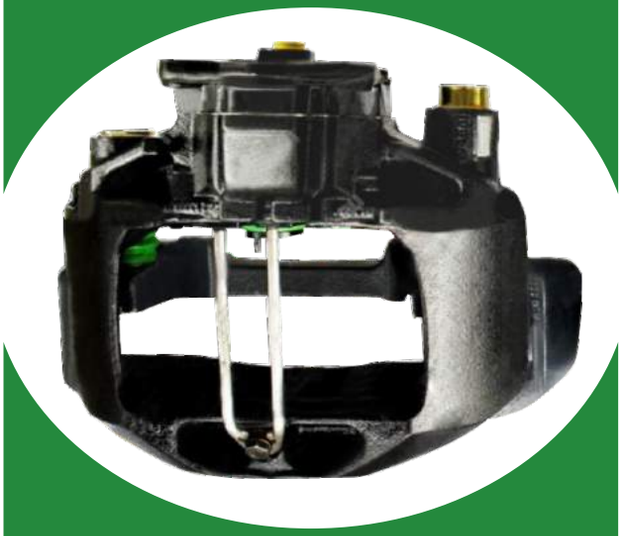

WBC

WBC

PAN 19-2/22-2 TYPE

Always the Best...

EAC CE UDEM JAS-ANZ ISO 9001 2015

PAN 19-2/22-2 TYPE

CHEEFT NUMBER	3201

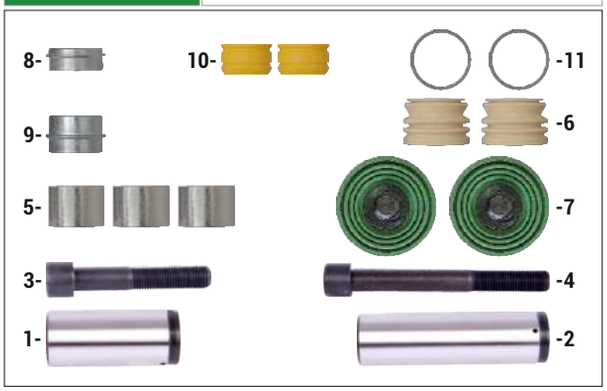

Caliper Guides, Seals & Tappet Repair Kit

OEM NUMBER	WBC 12 999 746 - DF 1440505 RNLT 5001 858 722

NR	CHEEFT NR	DESCRIPTIONS	DIMENSION	QTY
1	3503	GUIDE PIN	Ø37,70 x 76 mm	1
2	3504	GUIDE PIN	Ø38 x 118 mm	1
3	1513	BOLT	M16 x 1,5 x 80 mm	1
4	3514	BOLT	M16 x 1,5 x 120 mm	1
5	3522	TEFLON BUSH	Ø42 x Ø38 x 30 mm	3
6	3534	GUIDE PIN GAITER		2
7	3536	TAPPET & BOOT ASSEMBLY	Ø69,50 mm	2
8	3542	STEEL CAP	Ø42,5 x 17 mm	1
9	3543	STEEL CAP	Ø42,5 x 29 mm	1
10	3551	PLUG		2
11	3544	RING	Ø44,5 x 1,25 mm	2

CHEEFT NUMBER	3253

Caliper Repair Kit

OEM NUMBER	WBC 12 999 677 - DF 865965 RNLT 5021 170 487

NR	CHEEFT NR	DESCRIPTIONS	DIMENSION	QTY
1	3536	TAPPET & BOOT ASSEMBLY	Ø69,50 mm	2
2	3551	PLUG		2
3	1513	BOLT	M16 x 1,5 x 80 mm	1
4	3524	BOLT	M16 x 1,5 x 130 mm	1
5	3534	GUIDE PIN GAITER		2
6	3542	STEEL CAP	Ø42,5 x 17 mm	1
7	3544	RING	Ø44,5 x 1,25 mm	2
8	3573	DUST EXCLUDER RETAINER	Ø51,5 x 11,5 mm	1
9	3574	OUTER BOOT		1

CHEEFT NUMBER	3203

Caliper Tappet & Boot Assembly Repair Kit

OEM NUMBER	

NR	CHEEFT NR	DESCRIPTIONS	DIMENSION	QTY
1	3536	TAPPET & BOOT ASSEMBLY	Ø69,50 mm	2

ORIGINAL PART NUMBERS,MARKS AND MODELS MENTIONED ARE ONLY FOR DESCRIPTION PURPOSES.

PAN 19-2/22-2 TYPE

CHEEFT NUMBER	3202

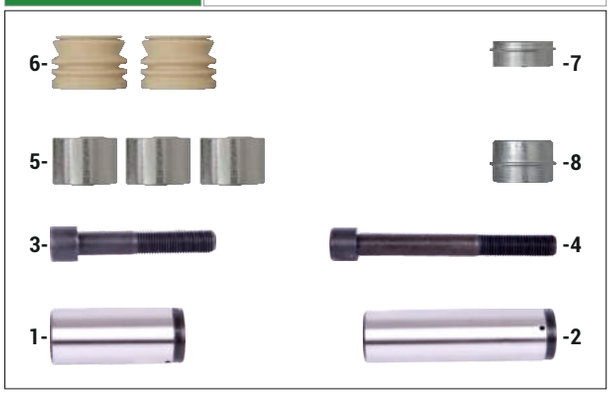

Caliper Guides & Seals Repair Kit

OEM NUMBER	

NR	CHEEFT NR	DESCRIPTIONS	DIMENSION	QTY
1	3503	GUIDE PIN	Ø37,70 x 76 mm	1
2	3504	GUIDE PIN	Ø38 x 118 mm	1
3	1513	BOLT	M16 x 1,5 x 80 mm	1
4	3514	BOLT	M16 x 1,5 x 120 mm	1
5	3522	TEFLON BUSH	Ø42 x Ø38 x 30 mm	3
6	3534	GUIDE PIN GAITER		2
7	3542	STEEL CAP	Ø42,5 x 17 mm	1
8	3543	STEEL CAP	Ø42,5 x 29 mm	1

CHEEFT NUMBER	3179

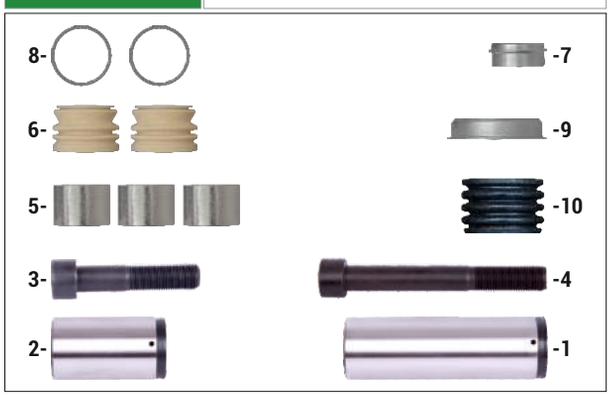

Caliper Guides & Seals Repair Kit

OEM NUMBER	WBC 12 999 678 - DF 865966 RNLT 5021 170 488

NR	CHEEFT NR	DESCRIPTIONS	DIMENSION	QTY
1	3506	GUIDE PIN	Ø38 x 128 mm	1
2	3507	GUIDE PIN	Ø38 x 70 mm	1
3	1513	BOLT	M16 x 1,5 x 80 mm	1
4	3524	BOLT	M16 x 1,5 x 130 mm	1
5	3522	TEFLON BUSH	Ø42 x Ø38 x 30 mm	3
6	3534	GUIDE PIN GAITER		2
7	3542	STEEL CAP	Ø42,5 x 17 mm	1
8	3544	RING	Ø44,5 x 1,25 mm	2
9	3573	DUST EXCLUDER RETAINER	Ø51,5 x 11,5 mm	1
10	3574	OUTER BOOT		1

CHEEFT NUMBER	3204

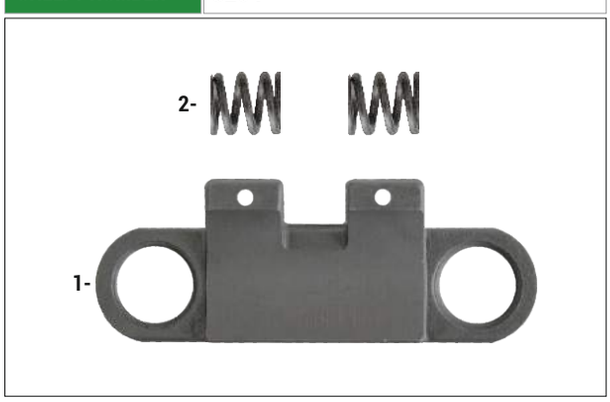

Caliper Bridge Assembly

OEM NUMBER	

NR	CHEEFT NR	DESCRIPTIONS	DIMENSION	QTY
1	3620	BRIDGE ASSEMBLY		1
2	3576	SPRING		2

ORIGINAL PART NUMBERS,MARKS AND MODELS MENTIONED ARE ONLY FOR DESCRIPTION PURPOSES.

PAN 19-2/22-2 TYPE

CHEEFT NUMBER	3183

Caliper Mechanism Repair Kit

OEM NUMBER	

NR	CHEEFT NR	DESCRIPTIONS	DIMENSION	QTY
1	3552	SEAL		2
2	3577	SPRING		2
3	3578	MECHANISM PIN		2
4	3579	WASHER		4
5	3585	ADJUSTER GEAR (LEFT)		1
6	3586	ADJUSTER GEAR (RIGHT)		1
7	3609	CIRCLIP		2

CHEEFT NUMBER	3211

Caliper Calibration Bolt (Left)

OEM NUMBER	

NR	CHEEFT NR	DESCRIPTIONS	DIMENSION	QTY
1	3205	CALIBRATION BOLT (LEFT)		1
2	3539	CALIBRATION BOLT LOCKING PLATE		1
3	3549	CIRCLIP		1

Caliper Calibration Bolt (Left)

CHEEFT NUMBER	3205
OEM NUMBER	

ORIGINAL PART NUMBERS,MARKS AND MODELS MENTIONED ARE ONLY FOR DESCRIPTION PURPOSES.

PAN 19-2/22-2 TYPE

CHEEFT NUMBER	3180

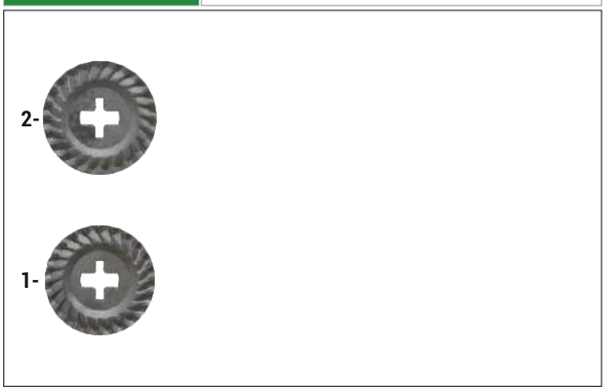

Caliper Adjuster Mechanism Gear

OEM NUMBER	

NR	CHEEFT NR	DESCRIPTIONS	DIMENSION	QTY
1	3585	ADJUSTER GEAR (LEFT)		1
2	3586	ADJUSTER GEAR (RIGHT)		1

CHEEFT NUMBER	3212

Caliper Calibration Bolt (Right)

OEM NUMBER	

NR	CHEEFT NR	DESCRIPTIONS	DIMENSION	QTY
1	3206	CALIBRATION BOLT (RIGHT)		1
2	3539	CALIBRATION BOLT LOCKING PLATE		1
3	3549	CIRCLIP		1

Caliper Calibration Bolt (Right)

CHEEFT NUMBER	3206
OEM NUMBER	

ORIGINAL PART NUMBERS,MARKS AND MODELS MENTIONED ARE ONLY FOR DESCRIPTION PURPOSES.

PAN 19-2/22-2 TYPE

CHEEFT NUMBER	3184

Caliper Mechanism Pin Repair Kit

OEM NUMBER	

NR	CHEEFT NR	DESCRIPTIONS	DIMENSION	QTY
1	3578	MECHANISM PIN		2
2	3579	WASHER		4
3	3609	CIRCLIP		2

CHEEFT NUMBER	3171

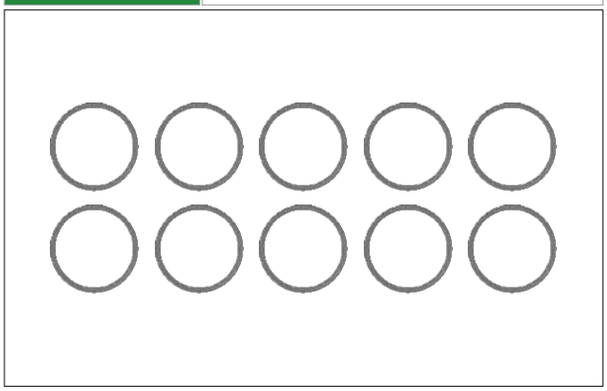

Caliper Ring Kit

OEM NUMBER	

NR	CHEEFT NR	DESCRIPTIONS	DIMENSION	QTY
1	3544	RING	Ø44,5 x 1,25 mm	10

CHEEFT NUMBER	3208

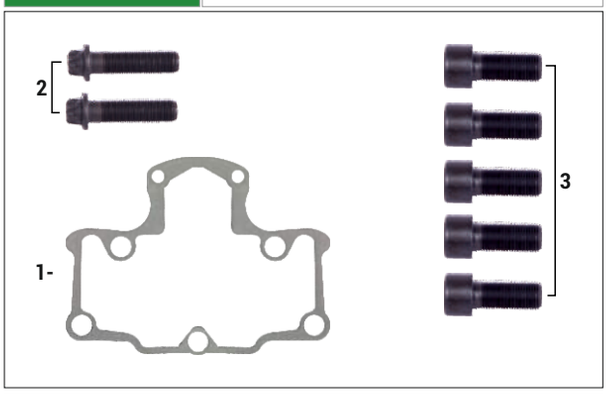

Caliper Gasket & Bolts Repair Kit

OEM NUMBER	

NR	CHEEFT NR	DESCRIPTIONS	DIMENSION	QTY
1	3207	COVER GASKET		1
2	3515	COVER BOLT	M10 x 1 x 40 mm	2
3	2552	BOLT	M16 x 1,5 x 40 mm	5

ORIGINAL PART NUMBERS,MARKS AND MODELS MENTIONED ARE ONLY FOR DESCRIPTION PURPOSES.

PAN 19-2/22-2 TYPE

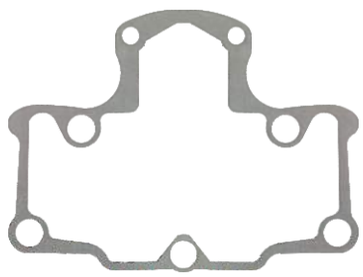

Caliper Cover Gasket	
CHEEFT NUMBER	3207
OEM NUMBER	

Caliper Outer Roller Bearings	
CHEEFT NUMBER	3209
OEM NUMBER	

Caliper Inner Roller Bearings	
CHEEFT NUMBER	3210
OEM NUMBER	

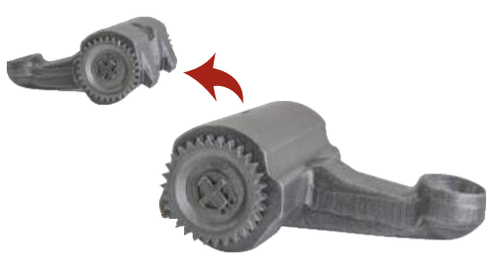

Caliper Adjuster Lever	
CHEEFT NUMBER	3181
OEM NUMBER	

Caliper Mechanism Housing	
CHEEFT NUMBER	3182
OEM NUMBER	

ORIGINAL PART NUMBERS,MARKS AND MODELS MENTIONED ARE ONLY FOR DESCRIPTION PURPOSES.

PAN 19-2/22-2 TYPE

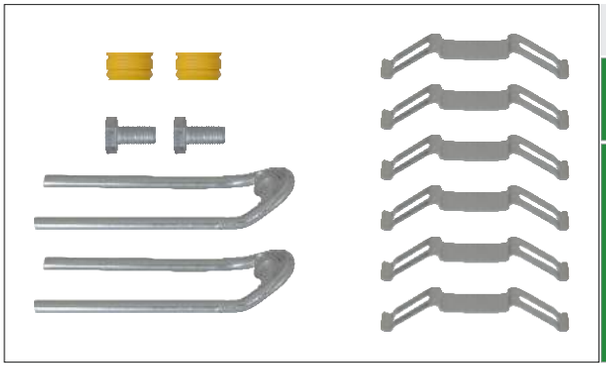

Caliper Pad Retainer Repair Kit	
CHEEFT NUMBER	3176
OEM NUMBER	

ORIGINAL PART NUMBERS,MARKS AND MODELS MENTIONED ARE ONLY FOR DESCRIPTION PURPOSES.

PAN 19-2/22-2 TYPE

WBC 19-2 RNLT MIDLUM SET

CHEEFT NUMBER	CHS3006

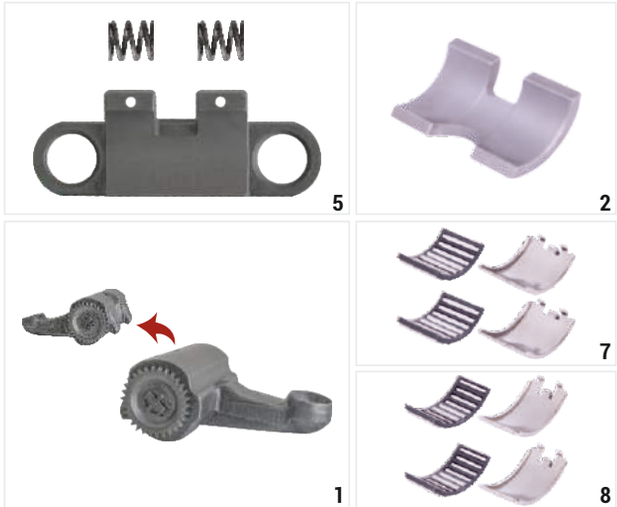

NR	CHEEFT NR	DESCRIPTIONS	QTY
1	3181	ADJUSTER LEVER	1
2	3182	MECHANISM HOUSING	1
3	3183	MECHANISM REPAIR KIT	1
4	3201	GUIDES SEALS & TAPPET REPAIR KIT	1
5	3204	BRIDGE ASSEMBLY	1
6	3208	GASKET & BOLTS REPAIR KIT	1
7	3209	OUTER ROLLER BEARING	1
8	3210	INNER ROLLER BEARING	1
9	3211	CALIBRATION BOLT (LEFT)	1
10	3212	CALIBRATION BOLT (RIGHT)	1

WBC PAN 22-2 SET

CHEEFT NUMBER	CHS3007

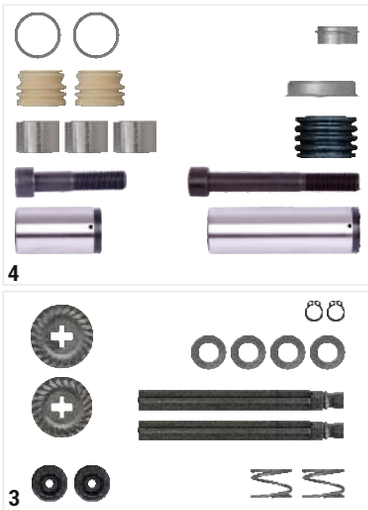

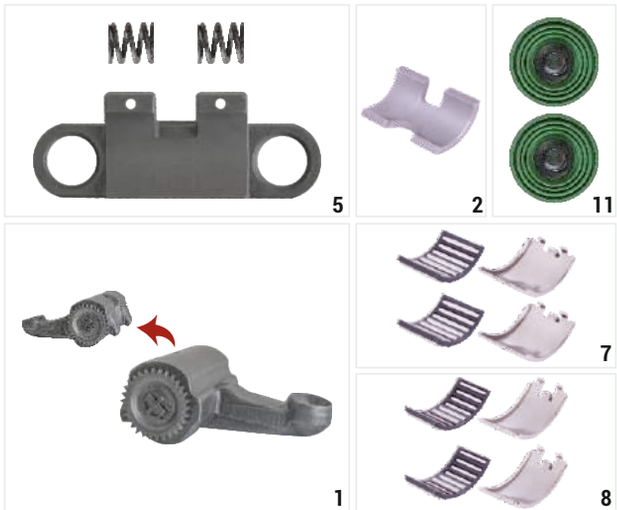

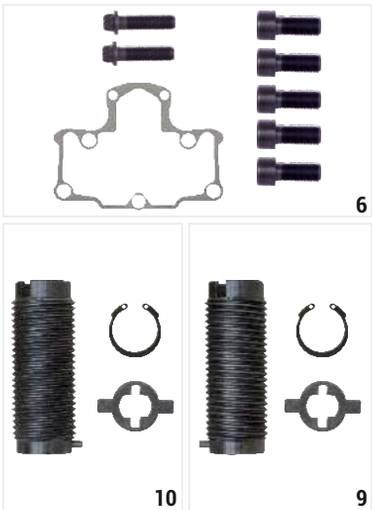

NR	CHEEFT NR	DESCRIPTIONS	QTY
1	3181	ADJUSTER LEVER	1
2	3182	MECHANISM HOUSING	1
3	3183	MECHANISM REPAIR KIT	1
4	3179	GUIDES & SEALS REPAIR KIT	1
5	3204	BRIDGE ASSEMBLY	1
6	3208	GASKET & BOLTS REPAIR KIT	1
7	3209	OUTER ROLLER BEARING	1
8	3210	INNER ROLLER BEARING	1
9	3211	CALIBRATION BOLT (LEFT)	1
10	3212	CALIBRATION BOLT (RIGHT)	1

NR	CHEEFT NR	DESCRIPTIONS	QTY
11	3203	TAPPET & BOOT ASSEMBLY REPAIR KIT	1

ORIGINAL PART NUMBERS,MARKS AND MODELS MENTIONED ARE ONLY FOR DESCRIPTION PURPOSES.

WBC

COHEEFT®
AIR DISC BRAKE CALIPER REPAIR KITS

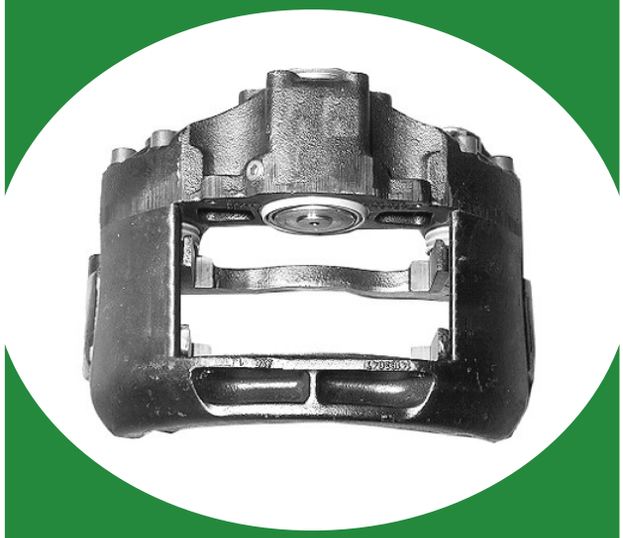

WBC

1000 V-G TYPE

Always the Best...

COHEEFT®

AIR DISC BRAKE CALIPER REPAIR KITS

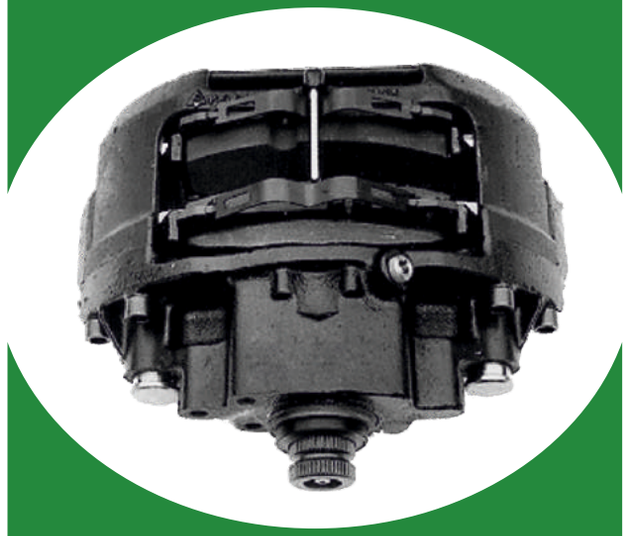

WBC

1000 V-G TYPE

Always the Best...

EAC CE UDEM JAS-ANZ ISO 9001 2015

1000 V-G TYPE

WBC

CHEEFT NUMBER	3251

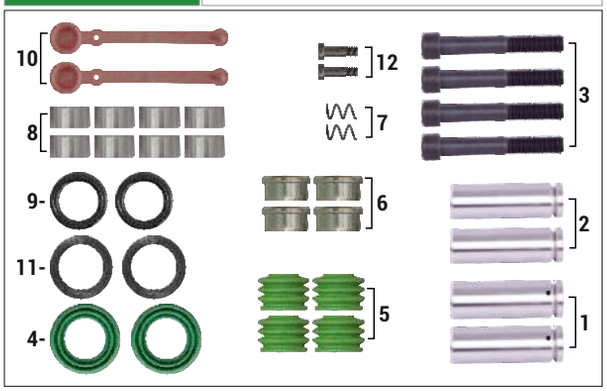

Caliper Guides & Seals Repair Kit

OEM NUMBER	WBC 12 999 729 - MN 81.50800.6023 N1011015566 - DF 1517354 NPLN 11015566 - 82139200

NR	CHEEFT NR	DESCRIPTIONS	DIMENSION	QTY
1	3505	GUIDE PIN (WITH HOLE)	Ø25 x 81mm	2
2	3510	GUIDE PIN (WITHOUT HOLE)	Ø25 x 81 mm	2
3	3516	BOLT	M12 x 1,5 x 90 mm	4
4	3537	BOLT DUST EXCLUDER		2
5	3538	GUIDE PIN GAITER		4
6	3560	STEEL CAP	Ø28 x 16 mm	4
7	3568	SPRING		2
8	3523	TEFLON BUSH	Ø28 x Ø25 x 15 mm	8
9	3593	O-RING		2
10	3570	TAPPET WITH GASKET		2
11	3540	COVER SEAL		2
12	3569	BOLT	M6 x 1,5 x 20 mm	2

CHEEFT NUMBER	3250

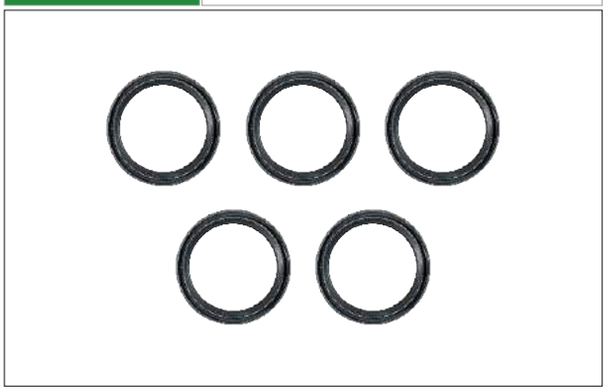

Caliper Seal Kit

OEM NUMBER	

NR	CHEEFT NR	DESCRIPTIONS	DIMENSION	QTY
1	3651	SEAL		5

ORIGINAL PART NUMBERS,MARKS AND MODELS MENTIONED ARE ONLY FOR DESCRIPTION PURPOSES.

COHEEFT®

AIR DISC BRAKE CALIPER REPAIR KITS

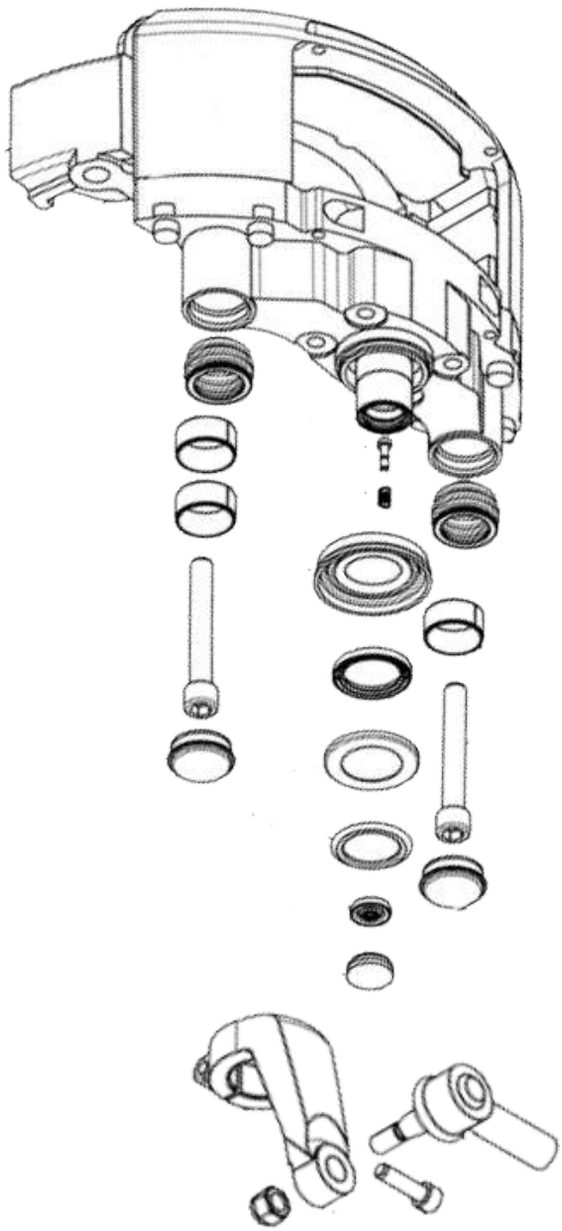

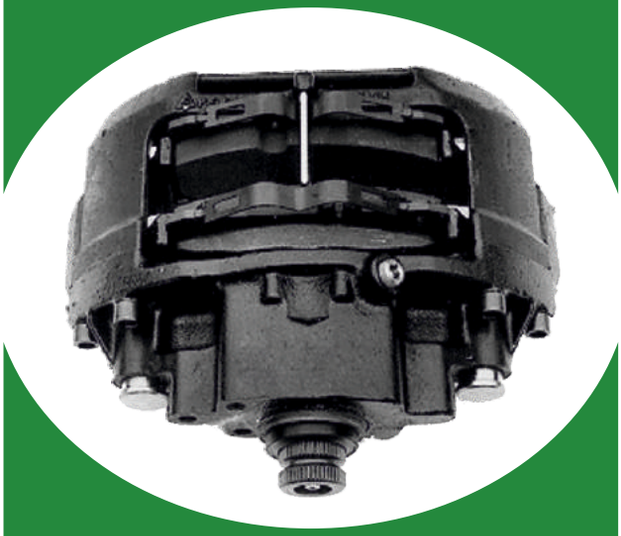

WBC

WBC

1300 V-G TYPE

Always the Best...

EAC CE UDEM JAS-ANZ ISO 9001 2015

1300 V-G TYPE

CHEEFT NUMBER	3258

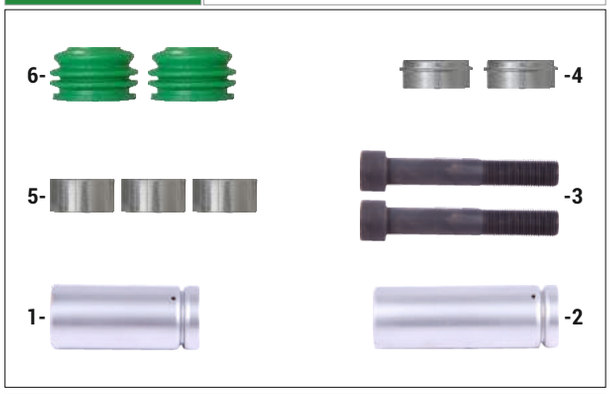

Caliper Guides & Seals Repair Kit

OEM NUMBER	MB 0004200982

NR	CHEEFT NR	DESCRIPTIONS	DIMENSION	QTY
1	3508	GUIDE PIN	Ø35 x 85 mm	1
2	3509	GUIDE PIN	Ø35 x 110 mm	1
3	3622	BOLT	M16 x 1,5 x 110 mm	2
4	3542	STEEL CAP	Ø42,5 x 17 mm	2
5	3621	TEFLON BUSH	Ø39 x Ø35 x 19,5 mm	3
6	3623	GUIDE PIN GAITER		2

CHEEFT NUMBER	3255

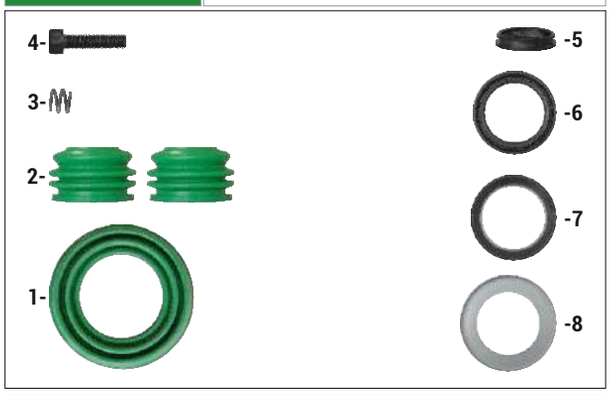

Caliper Boot & Seal Repair Kit

OEM NUMBER	MB 0004210880

NR	CHEEFT NR	DESCRIPTIONS	DIMENSION	QTY
1	3537	BOLT DUST EXCLUDER		1
2	3623	GUIDE PIN GAITER		2
3	3660	SPRING		1
4	3659	BOLT	M6 x 1 x 25 mm	1
5	3626	RUBBER CAP		1
6	3625	COVER PLATE SEAL	Ø55 x 40 mm	1
7	3627	SEAL	Ø57 x 40 mm	1
8	3628	RETAINER RING	Ø65,70 x Ø42,20 mm	1

CHEEFT NUMBER	3257

Caliper Push Plate Repair Kit

OEM NUMBER	

NR	CHEEFT NR	DESCRIPTIONS	DIMENSION	QTY
1	3624	PUSH PLATE		1
2	3659	BOLT	M6 x 1 x 25 mm	1
3	3660	SPRING		1

ORIGINAL PART NUMBERS,MARKS AND MODELS MENTIONED ARE ONLY FOR DESCRIPTION PURPOSES.

1300 V-G TYPE

CHEEFT NUMBER	3243

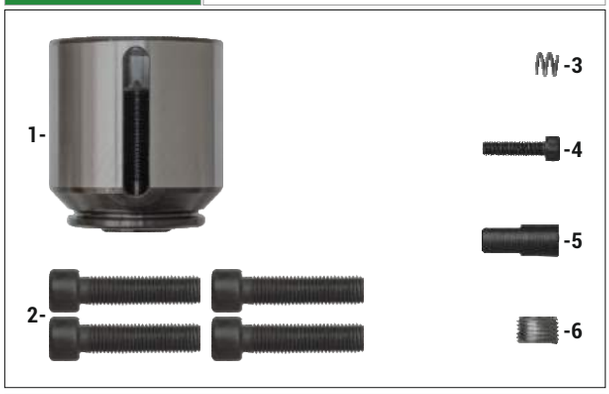

Caliper Piston Kit (Right)

OEM NUMBER	

NR	CHEEFT NR	DESCRIPTIONS	DIMENSION	QTY
1	3647	PISTON (RIGHT)		1
2	3655	BOLT	M12 x 1,50 x 50 mm	4
3	3660	SPRING		1
4	3659	BOLT	M6 x 1 x 25 mm	1
5	3657	ANTI ROTATION PIN		1
6	3656	PLUG		1

CHEEFT NUMBER	3244

Caliper Piston Kit (Left)

OEM NUMBER	

NR	CHEEFT NR	DESCRIPTIONS	DIMENSION	QTY
1	3648	PISTON (LEFT)		1
2	3655	BOLT	M12 x 1,50 x 50 mm	4
3	3660	SPRING		1
4	3659	BOLT	M6 x 1 x 25 mm	1
5	3657	ANTI ROTATION PIN		1
6	3656	PLUG		1

CHEEFT NUMBER	3245

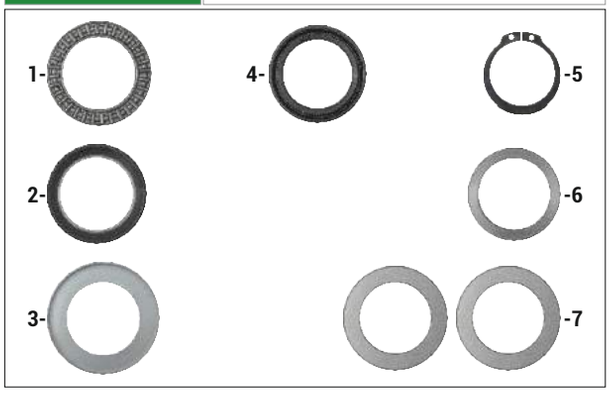

Caliper Washers & Circlips Repair Kit

OEM NUMBER	

NR	CHEEFT NR	DESCRIPTIONS	DIMENSION	QTY
1	3658	SHAFT ROLLER BEARING		1
2	3627	SEAL	Ø57 x 40 mm	1
3	3628	RETAINER RING	Ø65,70 x Ø42,20 mm	1
4	3625	COVER PLATE SEAL	Ø55 x 40 mm	1
5	3654	CIRCLIP		1
6	3653	WASHER	Ø53 x Ø40,30 mm	1
7	3652	WASHER	Ø59,50 x Ø40 mm	2

ORIGINAL PART NUMBERS,MARKS AND MODELS MENTIONED ARE ONLY FOR DESCRIPTION PURPOSES.

1300 V-G TYPE

Caliper Shaft (Right)	
CHEEFT NUMBER	3241
OEM NUMBER	

Caliper Shaft (Left)	
CHEEFT NUMBER	3242
OEM NUMBER	

Caliper Shaft Lever	
CHEEFT NUMBER	3246
OEM NUMBER	

ORIGINAL PART NUMBERS,MARKS AND MODELS MENTIONED ARE ONLY FOR DESCRIPTION PURPOSES.

COHEEFT®
AIR DISC BRAKE CALIPER REPAIR KITS

WBC

CARRIERS

Always the Best...

EAC CE UDEM JAS-ANZ ISO 9001 2015

CARRIERS

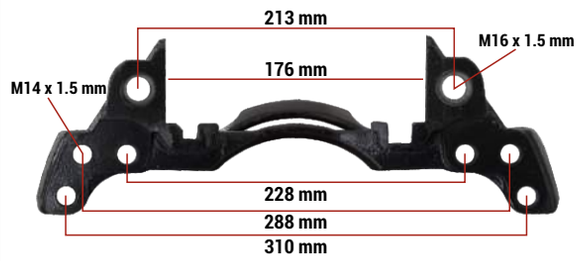

WBC Pan 17 Caliper Carrier 17,5 Inch (Right)

CHEEFT NUMBER	3259
OEM NUMBER	MN 81.50804.6355 - 81.50804.6087 81.50804.6071 - 81.50804.9071 81.50804.9087 - 81.50804.6089 - 1505372 81.50804.6070 - 81.50804.9070 81.50804.6354 - 81.50804.9088 - 1505373 IVECO 40175050

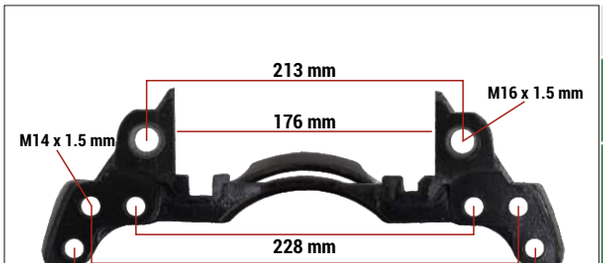

WBC Pan 17 Caliper Carrier 17,5 Inch (Left)

CHEEFT NUMBER	3260
OEM NUMBER	MN 81.50804.6355 - 81.50804.6087 81.50804.6071 - 81.50804.9071 81.50804.9087 - 81.50804.6089 - 1505372 81.50804.6070 - 81.50804.9070 81.50804.6354 -81.50804.9088 - 1505373 IVECO 40175050

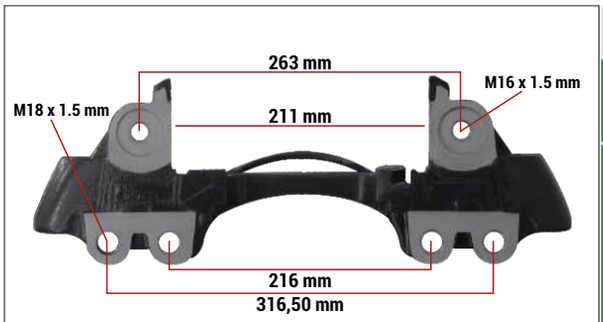

WBC Pan 22 Caliper Carrier 22,5 Inch (Right)

CHEEFT NUMBER	3261
OEM NUMBER	WBC 640 195 069 0 - 640 195 075 0 SF 3 080 0072 21 - 3 080 0074 20 Right SF Trailer Axle - 4 Hole

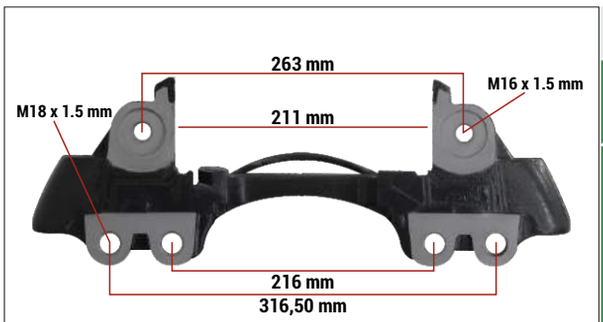

WBC Pan 22 Caliper Carrier 22,5 Inch (Left)

CHEEFT NUMBER	3262
OEM NUMBER	WBC 640 195 068 0 - 640 195 074 0 SF 3 080 0071 21 - 3 080 0073 20 Left SF Trailer Axle - 4 Hole

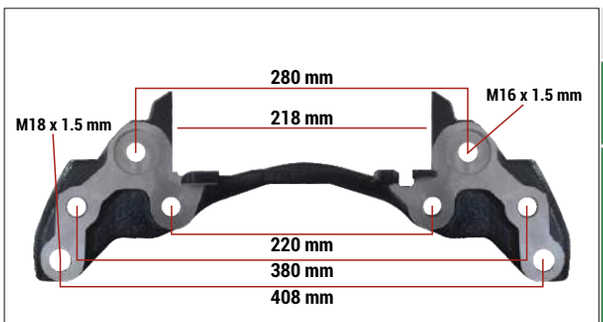

WBC Maxx 22 Caliper Carrier 22,5 Inch (Right)

CHEEFT NUMBER	3263
OEM NUMBER	Right WBC MAXX 22

ORIGINAL PART NUMBERS,MARKS AND MODELS MENTIONED ARE ONLY FOR DESCRIPTION PURPOSES.

CARRIERS

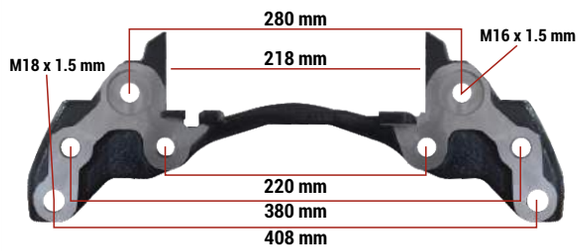

WBC Maxx 22 Caliper Carrier 22,5 Inch (Left)

CHEEFT NUMBER	3264
OEM NUMBER	MN 81.50822.6040 WBC 640 322 928 2 - 441 039 001 0 4811

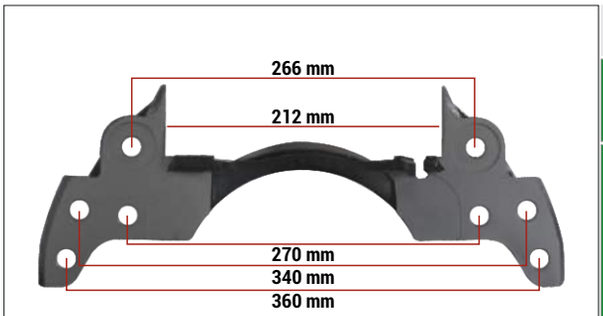

WBC Pan 19 Caliper Carrier (Right)

CHEEFT NUMBER	3265
OEM NUMBER	

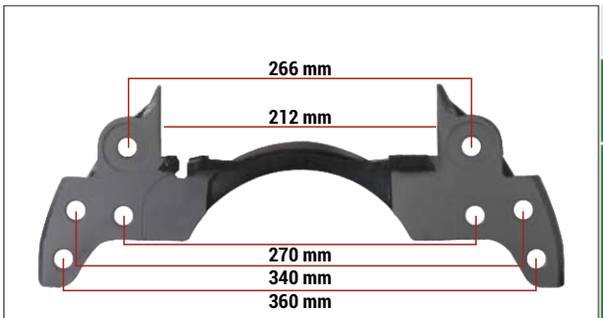

WBC Pan 19 Caliper Carrier (Left)

CHEEFT NUMBER	3266
OEM NUMBER	

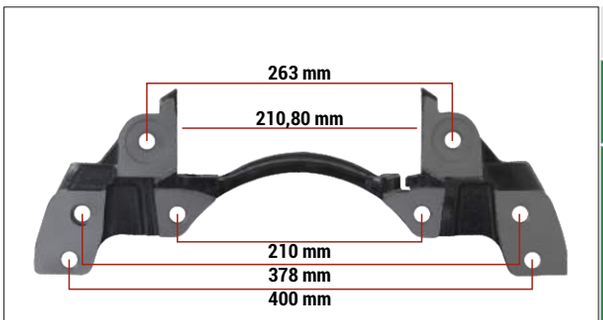

WBC Pan 22 Caliper Carrier 22,5 Inch (Right)

CHEEFT NUMBER	3269
OEM NUMBER	RIGHT WBC PAN 22

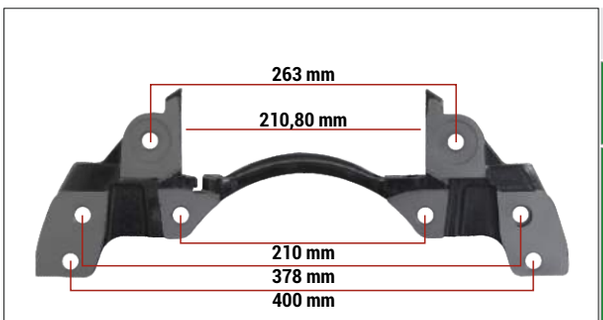

WBC Pan 22 Caliper Carrier 22,5 Inch (Left)

CHEEFT NUMBER	3270
OEM NUMBER	LEFT WBC PAN 22

ORIGINAL PART NUMBERS,MARKS AND MODELS MENTIONED ARE ONLY FOR DESCRIPTION PURPOSES.

CARRIERS

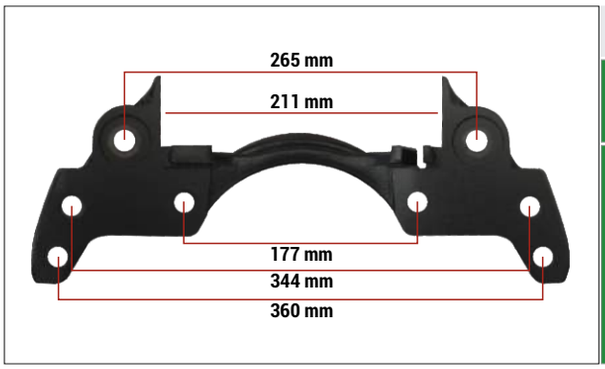

WBC 19,5 Inch Caliper Carrier (Right)

CHEEFT NUMBER	3273
OEM NUMBER	

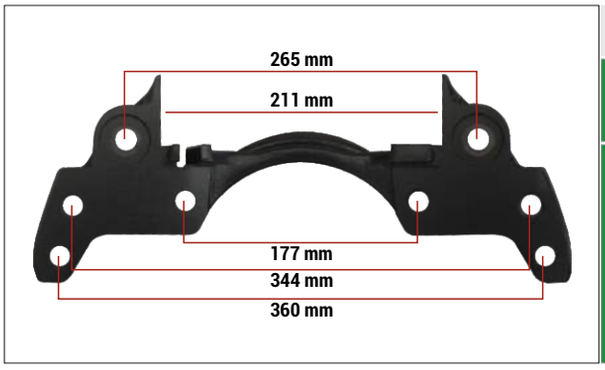

WBC 19,5 Inch Caliper Carrier (Left)

CHEEFT NUMBER	3274
OEM NUMBER	

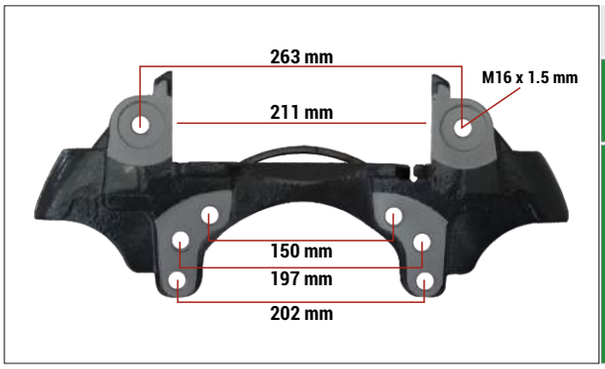

WBC Caliper Carrier VLX AXLE (Right)

CHEEFT NUMBER	3275
OEM NUMBER	WBC 6402250310

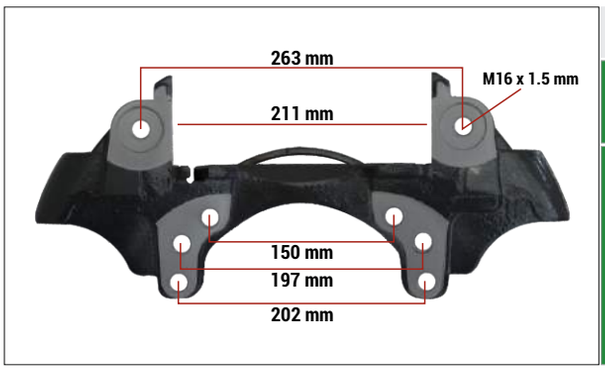

WBC Caliper Carrier VLX AXLE (Left)

CHEEFT NUMBER	3276
OEM NUMBER	WBC 6402250300

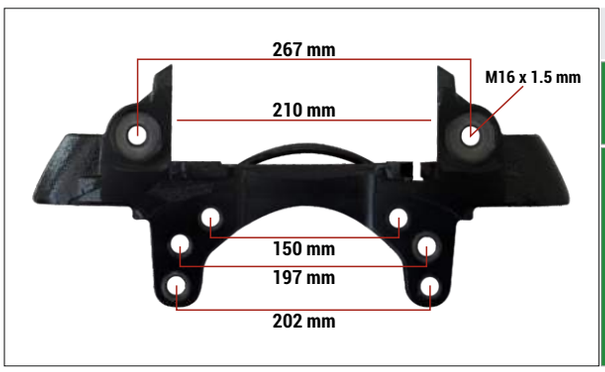

WBC Caliper Carrier for Schmitz Trailer (Right)

CHEEFT NUMBER	3277
OEM NUMBER	6402227406 D1-6J20

ORIGINAL PART NUMBERS,MARKS AND MODELS MENTIONED ARE ONLY FOR DESCRIPTION PURPOSES.

CARRIERS

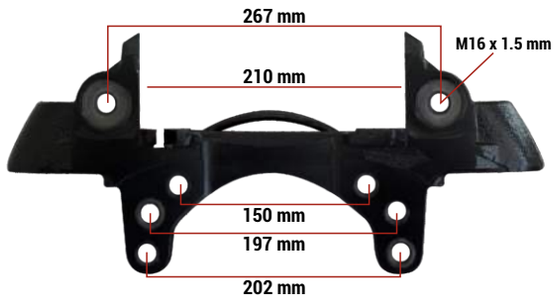

WBC Caliper Carrier for Schmitz Trailer (Left)	
CHEEFT NUMBER	3278
OEM NUMBER	6402227406 D3-6K25

WBC 19,5 Inch Caliper Carrier (Right)	
CHEEFT NUMBER	3279
OEM NUMBER	

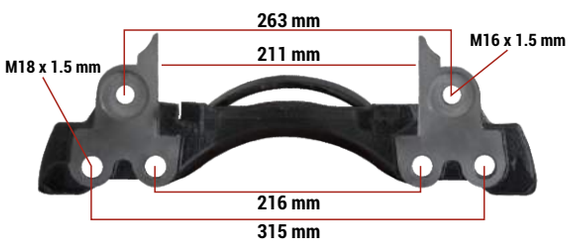

WBC 19,5 Inch Caliper Carrier (Left)	
CHEEFT NUMBER	3280
OEM NUMBER	

ORIGINAL PART NUMBERS,MARKS AND MODELS MENTIONED ARE ONLY FOR DESCRIPTION PURPOSES.

COHEEFT®
AIR DISC BRAKE CALIPER REPAIR KITS

WBC

SETS

Always the Best...

EAC CE UDEM JAS-ANZ ISO 9001 2015

COHEEFT®

AIR DISC BRAKE CALIPER REPAIR KITS

WBC

SETS

Always the Best...

EAC CE UDEM JAS-ANZ ISO 9001 2015

SETS

12-153 MN SET (RIGHT)

CHEEFT NUMBER	CHS3001

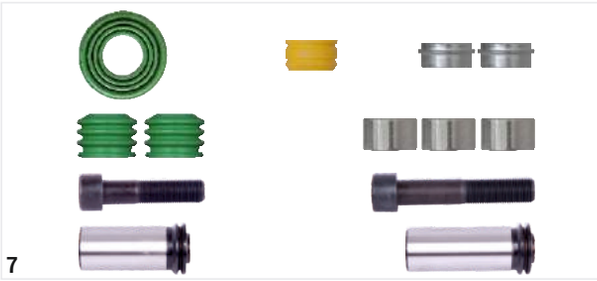

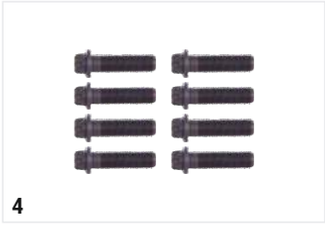

NR	CHEEFT NR	DESCRIPTIONS	QTY
1	3152	PUSH PLATE SLOTTED (RIGHT)	1
2	3553	COVER GASKET	1
3	3552	SEAL	1
4	3515	COVER BOLT	8
5	3172	ADJUSTING MECHANISM ASSEMBLY	1
6	3148	ROLLER BEARINGS	1
7	3143	GUIDES & SEALS REPAIR KIT	1
8	3149	LEVER (WITH PIN)	1

12-153 MN SET (LEFT)

CHEEFT NUMBER	CHS3002

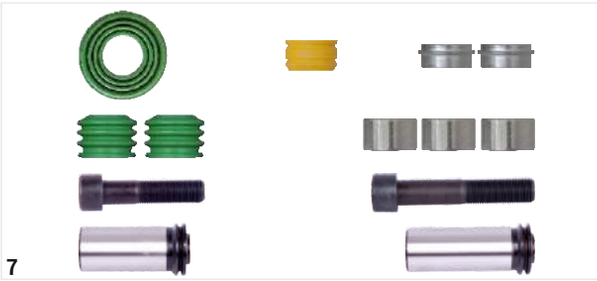

NR	CHEEFT NR	DESCRIPTIONS	QTY
1	3151	PUSH PLATE SLOTTED (LEFT)	1
2	3553	COVER GASKET	1
3	3552	SEAL	1
4	3515	COVER BOLT	8
5	3172	ADJUSTING MECHANISM ASSEMBLY	1
6	3148	ROLLER BEARINGS	1
7	3143	GUIDES & SEALS REPAIR KIT	1
8	3149	LEVER (WITH PIN)	1

ORIGINAL PART NUMBERS,MARKS AND MODELS MENTIONED ARE ONLY FOR DESCRIPTION PURPOSES.

SETS

SF AXLE SET (RIGHT)

CHEEFT NUMBER CHS3003

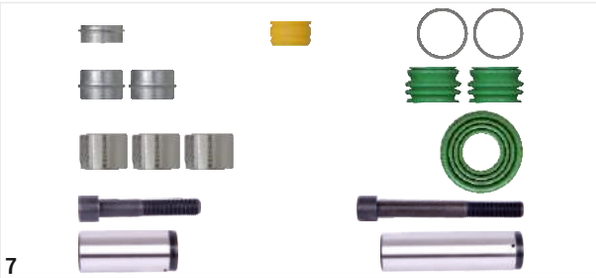

NR	CHEEFT NR	DESCRIPTIONS	QTY
1	3159	PUSH PLATE (RIGHT PAN 19)	1
2	3553	COVER GASKET	1
3	3552	SEAL	1
4	3515	COVER BOLT	8
5	3173	ADJUSTING MECHANISM ASSEMBLY (SF AXLE)	1
6	3148	ROLLER BEARINGS	1
7	3156	GUIDES & SEALS REPAIR KIT	1
8	3149	LEVER (WITH PIN)	1

SF AXLE SET (LEFT)

CHEEFT NUMBER CHS3004

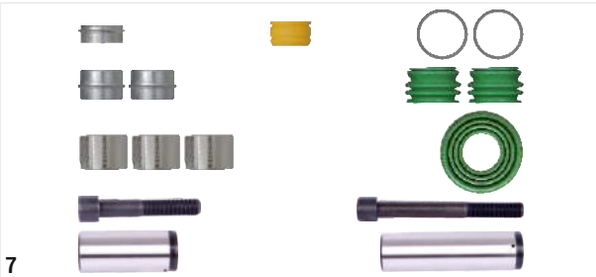

NR	CHEEFT NR	DESCRIPTIONS	QTY
1	3158	PUSH PLATE (LEFT PAN 19)	1
2	3553	COVER GASKET	1
3	3552	SEAL	1
4	3515	COVER BOLT	8
5	3173	ADJUSTING MECHANISM ASSEMBLY (SF AXLE)	1
6	3148	ROLLER BEARINGS	1
7	3156	GUIDES & SEALS REPAIR KIT	1
8	3149	LEVER (WITH PIN)	1

ORIGINAL PART NUMBERS,MARKS AND MODELS MENTIONED ARE ONLY FOR DESCRIPTION PURPOSES.

SETS

WBC 19-2 RNLT MIDLUM SET

CHEEFT NUMBER	CHS3006

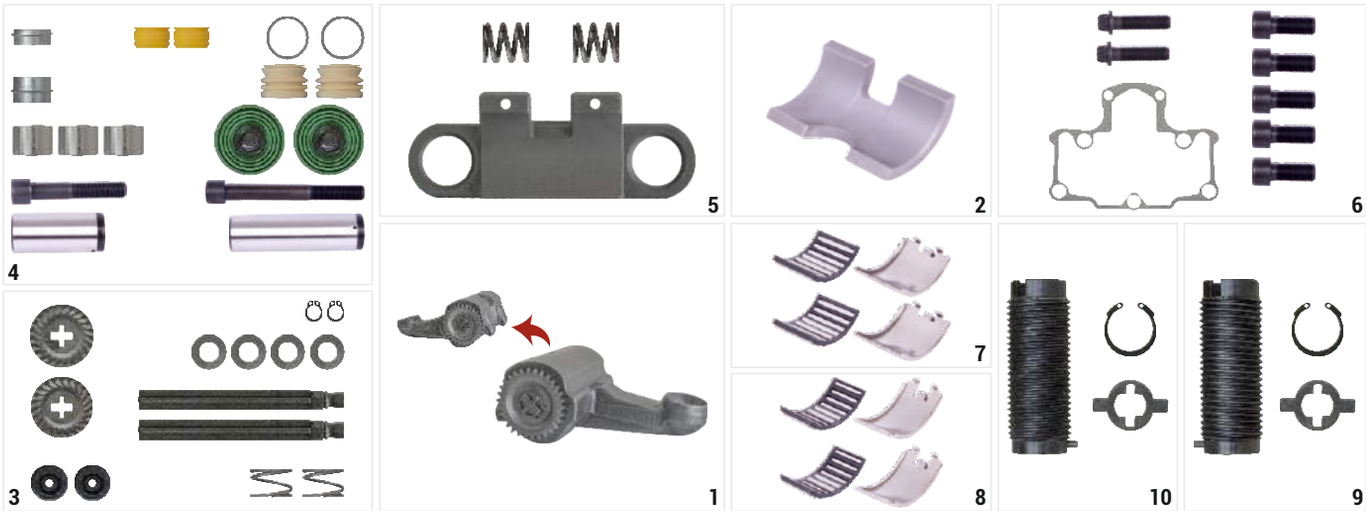

NR	CHEEFT NR	DESCRIPTIONS	QTY
1	3181	ADJUSTER LEVER	1
2	3182	MECHANISM HOUSING	1
3	3183	MECHANISM REPAIR KIT	1
4	3201	GUIDES SEALS & TAPPET REPAIR KIT	1
5	3204	BRIDGE ASSEMBLY	1
6	3208	GASKET & BOLTS REPAIR KIT	1
7	3209	OUTER ROLLER BEARING	1
8	3210	INNER ROLLER BEARING	1
9	3211	CALIBRATION BOLT (LEFT)	1
10	3212	CALIBRATION BOLT (RIGHT)	1

WBC PAN 22-2 SET

CHEEFT NUMBER	CHS3007

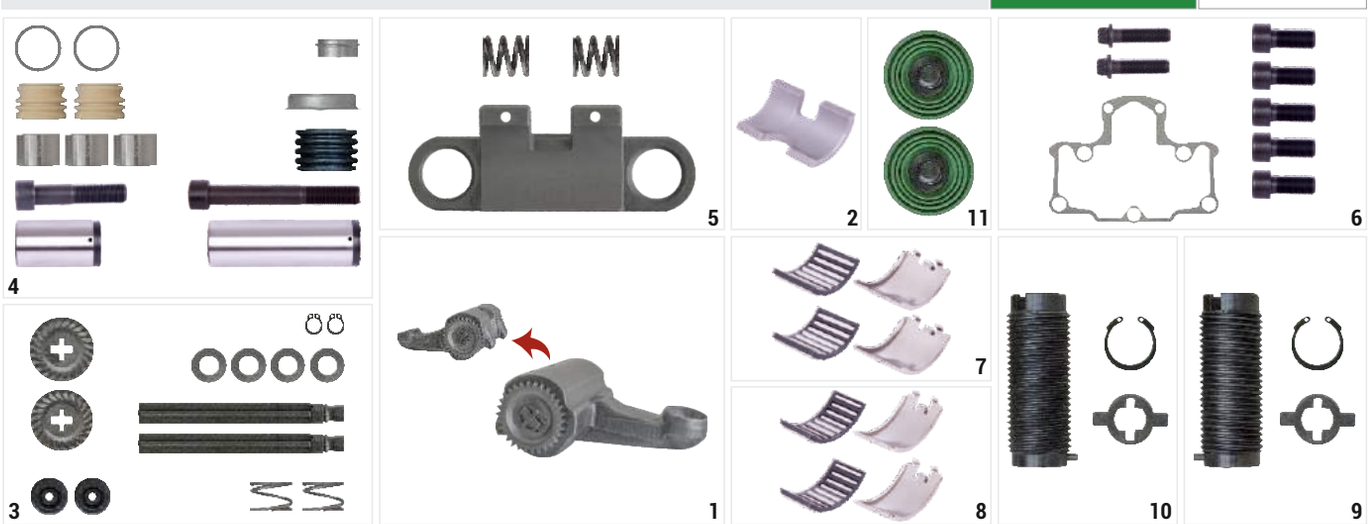

NR	CHEEFT NR	DESCRIPTIONS	QTY
1	3181	ADJUSTER LEVER	1
2	3182	MECHANISM HOUSING	1
3	3183	MECHANISM REPAIR KIT	1
4	3179	GUIDES & SEALS REPAIR KIT	1
5	3204	BRIDGE ASSEMBLY	1
6	3208	GASKET & BOLTS REPAIR KIT	1
7	3209	OUTER ROLLER BEARING	1
8	3210	INNER ROLLER BEARING	1
9	3211	CALIBRATION BOLT (LEFT)	1
10	3212	CALIBRATION BOLT (RIGHT)	1

NR	CHEEFT NR	DESCRIPTIONS	QTY
11	3203	TAPPET & BOOT ASSEMBLY REPAIR KIT	1

ORIGINAL PART NUMBERS,MARKS AND MODELS MENTIONED ARE ONLY FOR DESCRIPTION PURPOSES.

SETS

MN TGX SET (RIGHT)

CHEEFT NUMBER	CHS3005

NR	CHEEFT NR	DESCRIPTIONS	QTY
1	3131	LEVER (WITH PIN)	1
2	3136	SEAL REPAR KIT	1
3	3137	PLUG REPAR KIT	1
4	3138	COVER	1
5	3140	GUIDES & SEALS REPAIR KIT	1
6	3141	ADJUSTING MECHANISM ASSEMBLY MN TGX	1
7	3134	ROLLER BEARING	1
8	3615	ROLLER	2
9	3582	SEAL	1
10	3128	PUSH PLATE SLOTTED (RIGHT)	1

MN TGX SET (LEFT)

CHEEFT NUMBER	CHS3008

NR	CHEEFT NR	DESCRIPTIONS	QTY
1	3131	LEVER (WITH PIN)	1
2	3136	SEAL REPAR KIT	1
3	3137	PLUG REPAR KIT	1
4	3138	COVER	1
5	3140	GUIDES & SEALS REPAIR KIT	1
6	3141	ADJUSTING MECHANISM ASSEMBLY MN TGX	1
7	3134	ROLLER BEARING	1
8	3615	ROLLER	2
9	3582	SEAL	1
10	3129	PUSH PLATE SLOTTED (LEFT)	1

ORIGINAL PART NUMBERS,MARKS AND MODELS MENTIONED ARE ONLY FOR DESCRIPTION PURPOSES.

SETS

MN TGS SET (RIGHT)

CHEEFT NUMBER	CHS3011

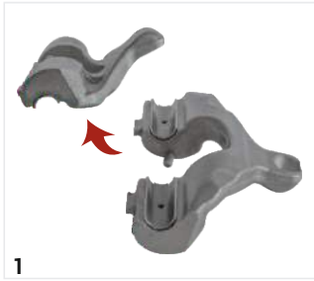

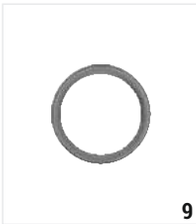

NR	CHEEFT NR	DESCRIPTIONS	QTY
1	3131	LEVER (WITH PIN)	1
2	3136	SEAL REPAR KIT	1
3	3137	PLUG REPAR KIT	1
4	3138	COVER	1
5	3140	GUIDES & SEALS REPAIR KIT	1
6	3142	ADJUSTING MECHANISM ASSEMBLY MN TGS	1
7	3134	ROLLER BEARING	1
8	3615	ROLLER	2
9	3582	SEAL	1
10	3128	PUSH PLATE SLOTTED (RIGHT)	1

MN TGS SET (LEFT)

CHEEFT NUMBER	CHS3012

NR	CHEEFT NR	DESCRIPTIONS	QTY
1	3131	LEVER (WITH PIN)	1
2	3136	SEAL REPAR KIT	1
3	3137	PLUG REPAR KIT	1
4	3138	COVER	1
5	3140	GUIDES & SEALS REPAIR KIT	1
6	3142	ADJUSTING MECHANISM ASSEMBLY MN TGS	1
7	3134	ROLLER BEARING	1
8	3615	ROLLER	2
9	3582	SEAL	1
10	3129	PUSH PLATE SLOTTED (LEFT)	1

ORIGINAL PART NUMBERS,MARKS AND MODELS MENTIONED ARE ONLY FOR DESCRIPTION PURPOSES.

SETS

MAXX 22T SET (RIGHT)

CHEEFT NUMBER: CHS3009

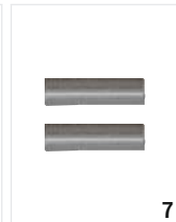

NR	CHEEFT NR	DESCRIPTIONS	QTY
1	3100	GUIDES & SEALS REPAIR KIT	1
2	3103	COVER	1
3	3101	ADJUSTING MECHANISM ASSEMBLY	1
4	3102	LEVER (WITH PIN)	1
5	3162	PUSH PLATE SLOTTED (RIGHT)	1
6	3134	ROLLER BEARING	1
7	3615	ROLLER	2
8	3552	SEAL	1

MAXX 22T SET (LEFT)

CHEEFT NUMBER: CHS3010

NR	CHEEFT NR	DESCRIPTIONS	QTY
1	3100	GUIDES & SEALS REPAIR KIT	1
2	3103	COVER	1
3	3101	ADJUSTING MECHANISM ASSEMBLY	1
4	3102	LEVER (WITH PIN)	1
5	3161	PUSH PLATE SLOTTED (LEFT)	1
6	3134	ROLLER BEARING	1
7	3615	ROLLER	2
8	3552	SEAL	1

ORIGINAL PART NUMBERS,MARKS AND MODELS MENTIONED ARE ONLY FOR DESCRIPTION PURPOSES.

HDX

C-HEEFT®
AIR DISC BRAKE CALIPER REPAIR KITS

MARK II

HDX

MARK II-III(2-3) TYPE

Always the Best...

EAC CE UDEM JAS-ANZ ISO 9001 2015

COHEEFT®

AIR DISC BRAKE CALIPER REPAIR KITS

MARK III

HDX

MARK II-III(2-3) TYPE

Always the Best...

HDX

C-HEEFT®
AIR DISC BRAKE CALIPER REPAIR KITS

HDX

MARK II-III(2-3) TYPE

Always the Best...

EAC CE UDEM JAS-ANZ ISO 9001 2015

MARK II-III (2-3) TYPE

CHEEFT NUMBER	4040

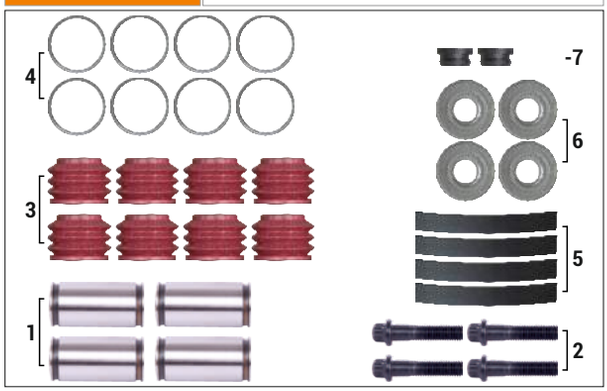

Caliper Guide & Seals Repair Kit

OEM NUMBER	HDX 87406

NR	CHEEFT NR	DESCRIPTIONS	DIMENSION	QTY
1	4504	GUIDE PIN	Ø35 x 69 mm	4
2	4519	BOLT	M14 x 2 x 61 mm	4
3	4532	GUIDE PIN DUST EXCLUDER		8
4	4553	DUST EXCLUDER	Ø39,5 x 4 mm	8
5	4521	TEFLON BUSH		4
6	4544	STEEL CAP	Ø56 x 12 mm	4
7	4551	PLUG		2

CHEEFT NUMBER	4069

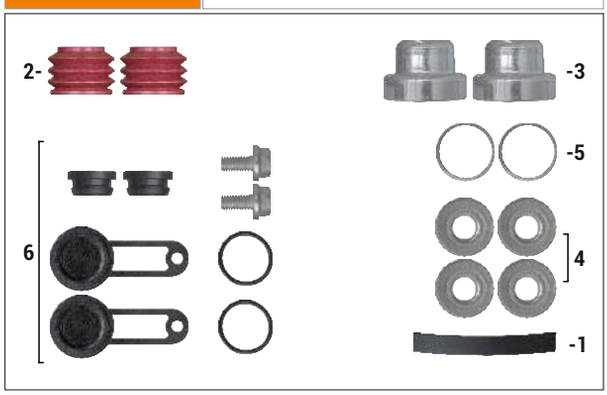

Caliper Boot & Plug Repair Kit

OEM NUMBER	HDX 89723

NR	CHEEFT NR	DESCRIPTIONS	DIMENSION	QTY
1	4521	TEFLON BUSH		1
2	4532	GUIDE PIN DUST EXCLUDER		2
3	4541	STEEL CAP	Ø57,5 x 40,5 mm	2
4	4544	STEEL CAP	Ø56 x 12 mm	4
5	4553	DUST EXCLUDER RETAINER	Ø39,5 x 4 mm	2
6	4071	PLASTIC PLUG REPAIR KIT		1

CHEEFT NUMBER	4070

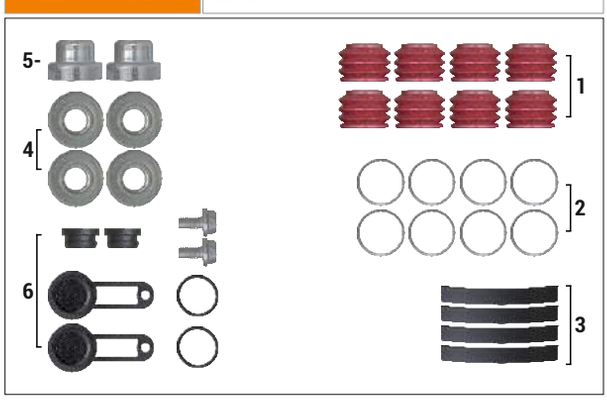

Caliper Boot & Plug Repair Kit

OEM NUMBER	HDX 87680

NR	CHEEFT NR	DESCRIPTIONS	DIMENSION	QTY
1	4532	GUIDE PIN DUST EXCLUDER		8
2	4553	DUST EXCLUDER RETAINER	Ø39,5 x 4 mm	8
3	4521	TEFLON BUSH		4
4	4544	STEEL CAP	Ø56 x 12 mm	4
5	4541	STEEL CAP	Ø57,5 x 40,5 mm	2
6	4071	PLASTIC PLUG REPAIR KIT		1

ORIGINAL PART NUMBERS,MARKS AND MODELS MENTIONED ARE ONLY FOR DESCRIPTION PURPOSES.

MARK II-III (2-3) TYPE

HDX

CHEEFT NUMBER	4072

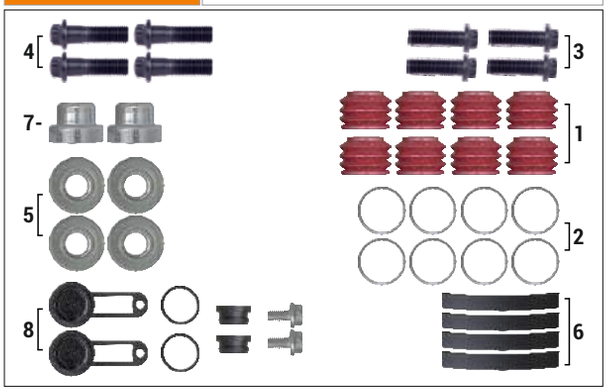

Caliper Repair Kit

OEM NUMBER	HDX 94661 - SF 3 434 3203 00 - 3 434 3854 00 3 434 3854 01 - 3 434 3856 00 - 3 434 3857 00 3 434 3858 00 - RNLT 5021 174 076

NR	CHEEFT NR	DESCRIPTIONS	DIMENSION	QTY
1	4532	GUIDE PIN DUST EXCLUDER		8
2	4553	DUST EXCLUDER RETAINER	Ø39,5 x 4 mm	8
3	4512	BOLT	M14 x 2 x 53 mm	4
4	4519	BOLT	M14 x 2 x 61 mm	4
5	4544	STEEL CAP	Ø56 x 12 mm	4
6	4521	TEFLON BUSH		4
7	4541	STEEL CAP	Ø57,5 x 40,5 mm	2
8	4071	PLASTIC PLUG REPAIR KIT		1

CHEEFT NUMBER	4076

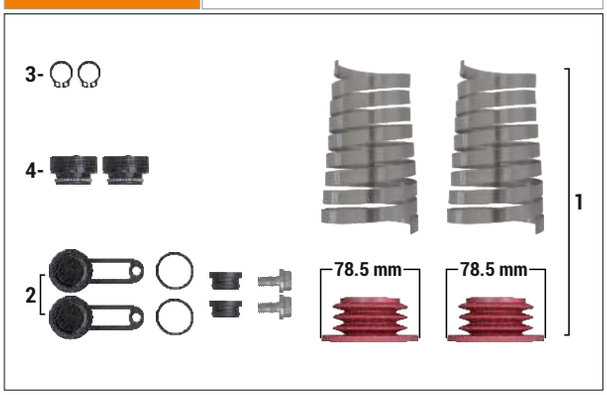

Caliper Repair Kit

OEM NUMBER	HDX 94663

NR	CHEEFT NR	DESCRIPTIONS	DIMENSION	QTY
1	4043	BOOT & SPRING REPAIR KIT		1
2	4071	PLASTIC PLUG REPAIR KIT		1
3	4557	CIRCLIP		2
4	4552	ADJUSTING BOLT SEAL		2

CHEEFT NUMBER	4068

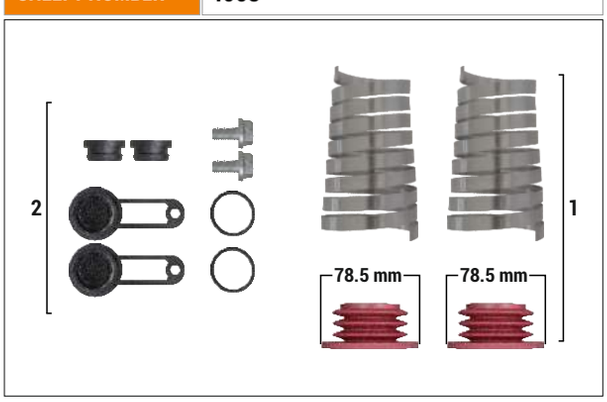

Caliper Boot & Plug Kit

OEM NUMBER	HDX 87405

NR	CHEEFT NR	DESCRIPTIONS	DIMENSION	QTY
1	4043	BOOT & SPRING REPAIR KIT		1
2	4071	PLASTIC PLUG REPAIR KIT		1

ORIGINAL PART NUMBERS,MARKS AND MODELS MENTIONED ARE ONLY FOR DESCRIPTION PURPOSES.

MARK II-III (2-3) TYPE

CHEEFT NUMBER	4043

Caliper Boot & Spring Repair Kit

OEM NUMBER	

NR	CHEEFT NR	DESCRIPTIONS	DIMENSION	QTY
1	4533	TAPPET DUST EXCLUDER	Ø78,5 mm	2
2	4566	PROTECTIVE SPRING	Ø78,5 mm	2

CHEEFT NUMBER	4038

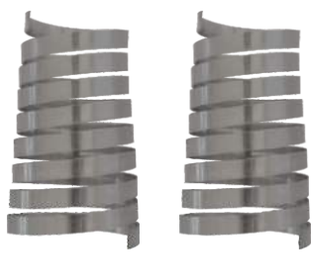

Caliper Protective Spring Kit

OEM NUMBER	

NR	CHEEFT NR	DESCRIPTIONS	DIMENSION	QTY
1	4566	PROTECTIVE SPRING	Ø78,5 mm	2

CHEEFT NUMBER	4071

Plastic Plug Repair Kit

OEM NUMBER	HDX 87408

NR	CHEEFT NR	DESCRIPTIONS	DIMENSION	QTY
1	4575	PLASTIC CAP		2
2	4576	O-RING		2
3	4577	BOLT		2
4	4551	PLUG		2

ORIGINAL PART NUMBERS,MARKS AND MODELS MENTIONED ARE ONLY FOR DESCRIPTION PURPOSES.

MARK II-III (2-3) TYPE

HDX

CHEEFT NUMBER	4039

Caliper Calibration Bolt Kit (Piston)

OEM NUMBER	

NR	CHEEFT NR	DESCRIPTIONS	DIMENSION	QTY
1	4517	CALIBRATION BOLT (RIGHT)		1
2	4518	CALIBRATION BOLT (LEFT)		1

CHEEFT NUMBER	4042

Caliper Cover

OEM NUMBER	

NR	CHEEFT NR	DESCRIPTIONS	DIMENSION	QTY
1	4510	COVER		1
2	4520	BOLT WITH NUT	M8 x 60 mm	4

CHEEFT NUMBER	4045

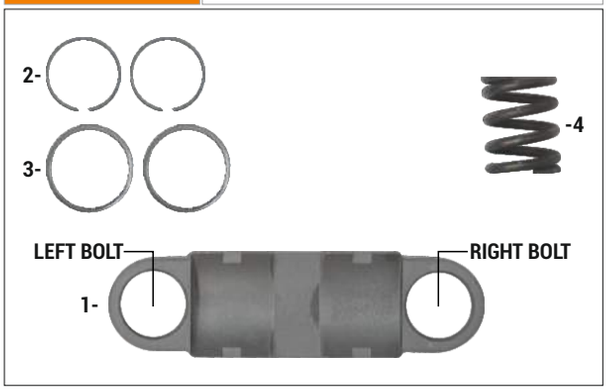

Caliper Bridge Assembly Repair Kit

OEM NUMBER	

NR	CHEEFT NR	DESCRIPTIONS	DIMENSION	QTY
1	4572	BRIDGE ASSEMBLY		1
2	4560	CIRCLIP	Ø35 x 4 mm	2
3	4567	CIRCLIP	Ø39 x 6,5 mm	2
4	4569	SPRING		1

ORIGINAL PART NUMBERS,MARKS AND MODELS MENTIONED ARE ONLY FOR DESCRIPTION PURPOSES.

MARK II-III (2-3) TYPE

CHEEFT NUMBER	4055

Caliper Mechanism, Piston & Cover Set

OEM NUMBER	

NR	CHEEFT NR	DESCRIPTIONS	DIMENSION	QTY
1	4037	MECHANISM CLAMP		1
2	4039	CALIBRATION BOLT KIT (PISTON)		1
3	4041	MECHANISM		1
4	4042	COVER		1
5	4043	BOOT & SPRING REPAIR KIT		1
6	4045	BRIDGE ASSEMBLY REPAIR KIT		1
7	4048	BEARINGS		1
8	4049	BEARINGS		1
9	4050	LEVER		1
10	4052	MECHANISM METAL TOP COVER KIT		1
11	4053	MECHANISM GEAR (LEFT)		1
12	4054	MECHANISM GEAR (RIGHT)		1

CHEEFT NUMBER	4037

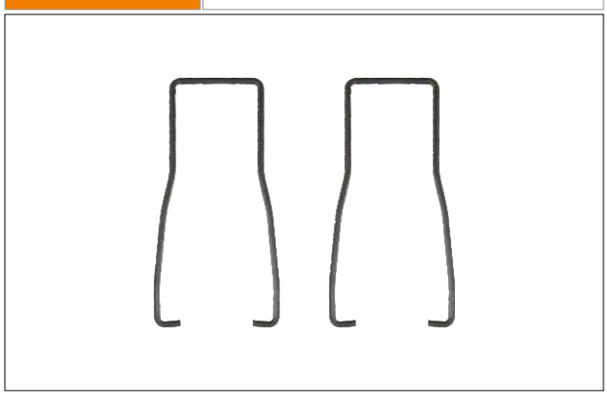

Caliper Mechanism Clamp Kit

OEM NUMBER	

NR	CHEEFT NR	DESCRIPTIONS	DIMENSION	QTY
1	4565	MECHANISM CLAMP		2

CHEEFT NUMBER	4074

Caliper Pad Retainer Kit

OEM NUMBER	HDX 91216

NR	CHEEFT NR	DESCRIPTIONS	DIMENSION	QTY
1	4032	PAD RETAINER REPAIR KIT		1
2	4574	PAD SPRING		2

ORIGINAL PART NUMBERS,MARKS AND MODELS MENTIONED ARE ONLY FOR DESCRIPTION PURPOSES.

MARK II-III (2-3) TYPE

HDX

CHEEFT NUMBER	4075

Caliper Pad Retainer Kit

OEM NUMBER	HDX 94659 - SF 3 434 3851 01 RNLT 5021 174 162 - 5021 174 180

NR	CHEEFT NR	DESCRIPTIONS	DIMENSION	QTY
1	4074	PAD RETAINER REPAIR KIT		2
2	4551	PLUG		2

CHEEFT NUMBER	4051

Caliper Tappet Repair Kit

OEM NUMBER	

NR	CHEEFT NR	DESCRIPTIONS	DIMENSION	QTY
1	4580	TAPPET	Ø73 mm	2
2	4581	CIRCLIP		2

CHEEFT NUMBER	4044

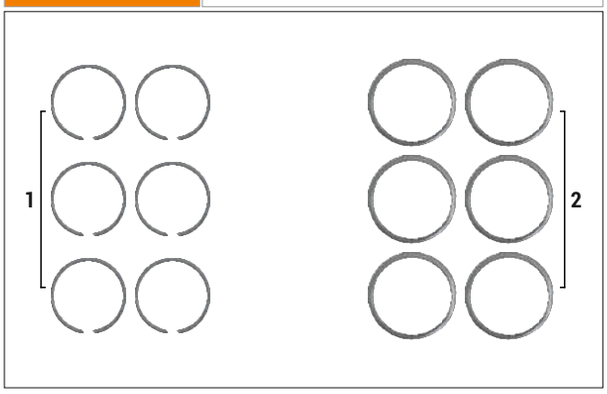

Caliper Circlip Kit

OEM NUMBER	

NR	CHEEFT NR	DESCRIPTIONS	DIMENSION	QTY
1	4560	CIRCLIP	Ø35 x 4 mm	6
2	4567	CIRCLIP	Ø39 x 6,5 mm	6

ORIGINAL PART NUMBERS,MARKS AND MODELS MENTIONED ARE ONLY FOR DESCRIPTION PURPOSES.

MARK II-III (2-3) TYPE

Caliper Mechanism	
CHEEFT NUMBER	4041
OEM NUMBER	

Caliper Lever	
CHEEFT NUMBER	4050
OEM NUMBER	

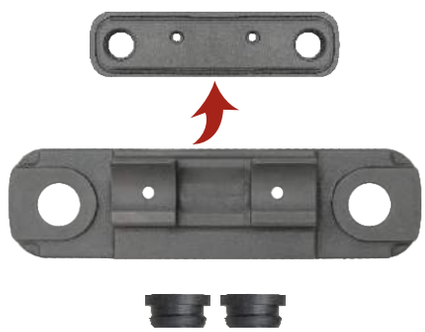

Caliper Mechanism Metal Top Cover Kit	
CHEEFT NUMBER	4052
OEM NUMBER	

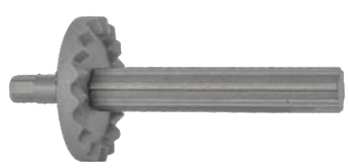

Caliper Mechanism Gear (Left)	
CHEEFT NUMBER	4053
OEM NUMBER	

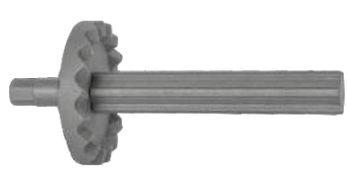

Caliper Mechanism Gear (Right)	
CHEEFT NUMBER	4054
OEM NUMBER	

ORIGINAL PART NUMBERS,MARKS AND MODELS MENTIONED ARE ONLY FOR DESCRIPTION PURPOSES.

MARK II-III (2-3) TYPE

Caliper Pad Retainer Repair Kit	
CHEEFT NUMBER	4032
OEM NUMBER	HDX 90673

Caliper Bearings	
CHEEFT NUMBER	4048
OEM NUMBER	

Caliper Bearings	
CHEEFT NUMBER	4049
OEM NUMBER	

ORIGINAL PART NUMBERS,MARKS AND MODELS MENTIONED ARE ONLY FOR DESCRIPTION PURPOSES.

MARK II-III (2-3) TYPE

PISTON VERSION REPAIR SET	CHEEFT NUMBER	CHS4004

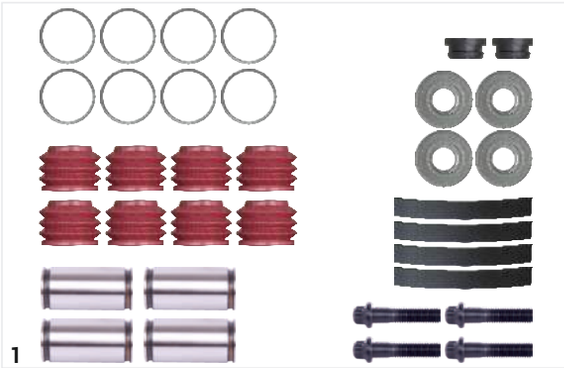
1

2

3

NR	CHEEFT NR	DESCRIPTIONS	QTY
1	4040	GUIDE & SEALS REPAIR KIT	1
2	4032	PAD RETAINER REPAIR KIT	1
3	4055	MECHANISM PISTON & COVER SET	1

ORIGINAL PART NUMBERS,MARKS AND MODELS MENTIONED ARE ONLY FOR DESCRIPTION PURPOSES.

HDX

COHEEFT®
AIR DISC BRAKE CALIPER REPAIR KITS

HDX

MARK IV (4) TYPE

Always the Best...

EAC CE UDEM JAS-ANZ ISO 9001 2015

COHEEFT®

AIR DISC BRAKE CALIPER REPAIR KITS

HDX

MARK IV (4) TYPE

Always the Best...

HDX

EAC CE UDEM JAS-ANZ ISO 9001 2015

MARK IV (4) TYPE

HDX

CHEEFT NUMBER	4022

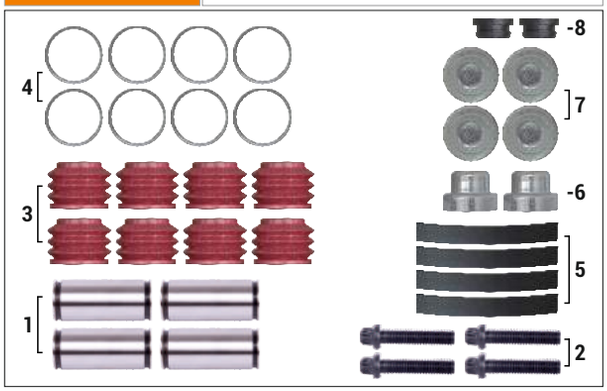

Caliper Guide & Seals Repair Kit

OEM NUMBER	HDX 89541

NR	CHEEFT NR	DESCRIPTIONS	DIMENSION	QTY
1	4502	GUIDE PIN	Ø35 x 70 mm	4
2	4512	BOLT	M14 x 2 x 53 mm	4
3	4532	GUIDE PIN DUST EXCLUDER		8
4	4553	DUST EXCLUDER RETAINER	Ø39,5 x 4 mm	8
5	4521	TEFLON BUSH		4
6	4541	STEEL CAP	Ø57,5 x 40,5 mm	2
7	4543	STEEL CAP	Ø56 x 12,5 mm	4
8	4551	PLUG		2

CHEEFT NUMBER	4023

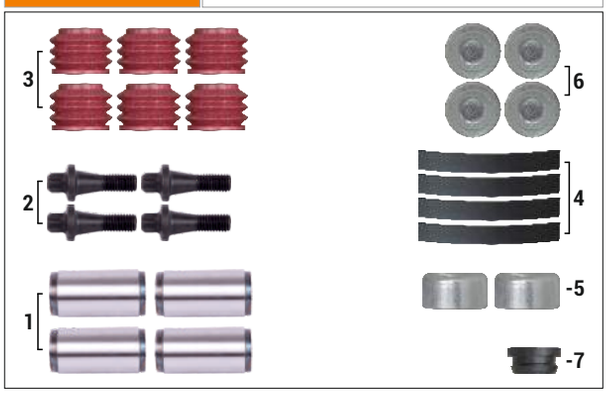

Caliper Guide & Seals Repair Kit

OEM NUMBER	HDX 91012

NR	CHEEFT NR	DESCRIPTIONS	DIMENSION	QTY
1	4501	GUIDE PIN	Ø35 x 64 mm	4
2	4511	BOLT	M14 x 2 x 42 mm	4
3	4532	GUIDE PIN DUST EXCLUDER		6
4	4521	TEFLON BUSH		4
5	4542	STEEL CAP	Ø42 x 22,5 mm	2
6	4543	STEEL CAP	Ø56 x 12,5 mm	4
7	4551	PLUG		1

CHEEFT NUMBER	4066

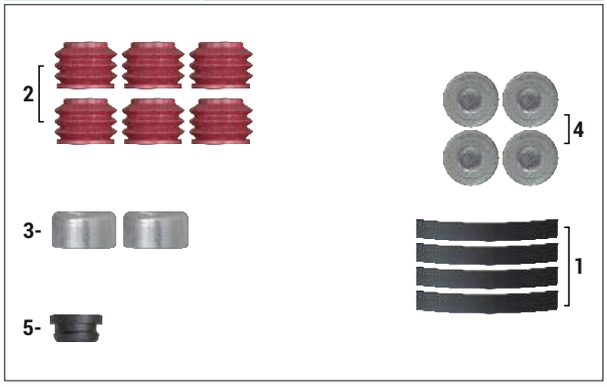

Caliper Boots & Cap Repair Kit

OEM NUMBER	HDX 91013

NR	CHEEFT NR	DESCRIPTIONS	DIMENSION	QTY
1	4521	TEFLON BUSH		4
2	4532	GUIDE PIN DUST EXCLUDER		6
3	4542	STEEL CAP	Ø42 x 22,5 mm	2
4	4543	STEEL CAP	Ø56 x 12,5 mm	4
5	4551	PLUG		1

ORIGINAL PART NUMBERS,MARKS AND MODELS MENTIONED ARE ONLY FOR DESCRIPTION PURPOSES.

MARK IV (4) TYPE

CHEEFT NUMBER	4067

Caliper Boots & Cap Repair Kit

OEM NUMBER	HDX 91014

NR	CHEEFT NR	DESCRIPTIONS	DIMENSION	QTY
1	4532	GUIDE PIN DUST EXCLUDER		2
2	4542	STEEL CAP	Ø42 x 22,5 mm	2
3	4543	STEEL CAP	Ø56 x 12,5 mm	4
4	4521	TEFLON BUSH		1
5	4551	PLUG		1

CHEEFT NUMBER	4069

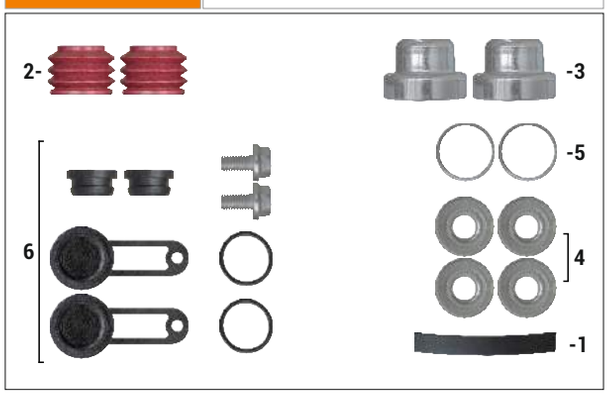

Caliper Boot & Plug Repair Kit

OEM NUMBER	HDX 89723

NR	CHEEFT NR	DESCRIPTIONS	DIMENSION	QTY
1	4521	TEFLON BUSH		1
2	4532	GUIDE PIN DUST EXCLUDER		2
3	4541	STEEL CAP	Ø57,5 x 40,5 mm	2
4	4544	STEEL CAP	Ø56 x 12 mm	4
5	4553	DUST EXCLUDER RETAINER	Ø39,5 x 4 mm	2
6	4071	PLASTIC PLUG REPAIR KIT		1

CHEEFT NUMBER	4070

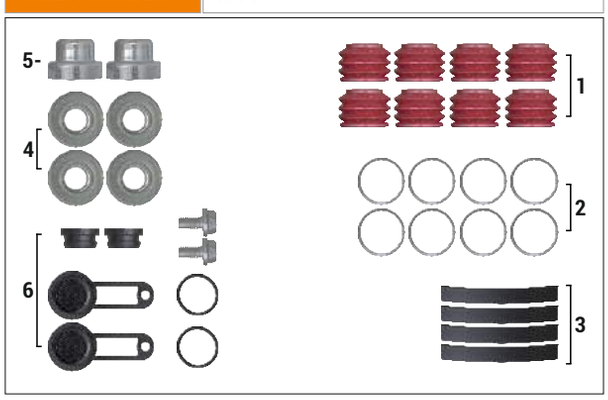

Caliper Boot & Plug Repair Kit

OEM NUMBER	HDX 87680

NR	CHEEFT NR	DESCRIPTIONS	DIMENSION	QTY
1	4532	GUIDE PIN DUST EXCLUDER		8
2	4553	DUST EXCLUDER RETAINER	Ø39,5 x 4 mm	8
3	4521	TEFLON BUSH		4
4	4544	STEEL CAP	Ø56 x 12 mm	4
5	4541	STEEL CAP	Ø57,5 x 40,5 mm	2
6	4071	PLASTIC PLUG REPAIR KIT		1

ORIGINAL PART NUMBERS,MARKS AND MODELS MENTIONED ARE ONLY FOR DESCRIPTION PURPOSES.

MARK IV (4) TYPE

HDX

CHEEFT NUMBER	4072

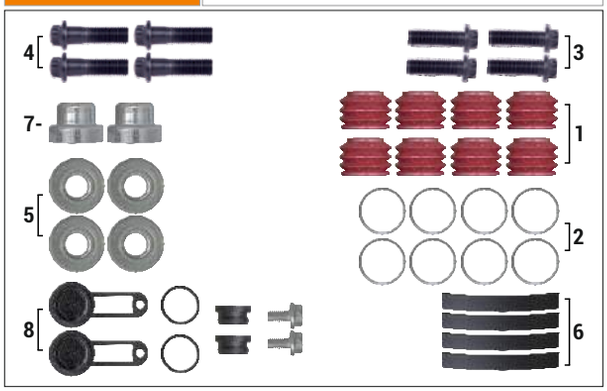

Caliper Repair Kit

OEM NUMBER	HDX 94661 - SF 3 434 3203 00 - 3 434 3854 00 3 434 3854 01 - 3 434 3856 00 - 3 434 3857 00 3 434 3858 00 - RNLT 5021 174 076

NR	CHEEFT NR	DESCRIPTIONS	DIMENSION	QTY
1	4532	GUIDE PIN DUST EXCLUDER		8
2	4553	DUST EXCLUDER RETAINER	Ø39,5 x 4 mm	8
3	4512	BOLT	M14 x 2 x 53 mm	4
4	4519	BOLT	M14 x 2 x 61 mm	4
5	4544	STEEL CAP	Ø56 x 12 mm	4
6	4521	TEFLON BUSH		4
7	4541	STEEL CAP	Ø57,5 x 40,5 mm	2
8	4071	PLASTIC PLUG REPAIR KIT		1

CHEEFT NUMBER	4007

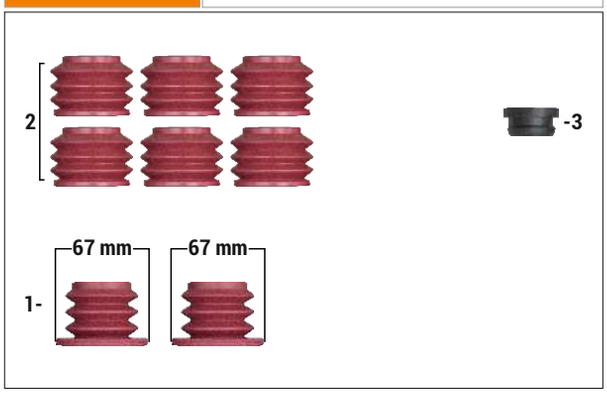

Caliper Boots Repair Kit

OEM NUMBER	

NR	CHEEFT NR	DESCRIPTIONS	DIMENSION	QTY
1	4531	TAPPET DUST EXCLUDER	Ø67 mm	2
2	4532	GUIDE PIN DUST EXCLUDER		6
3	4551	PLUG		1

CHEEFT NUMBER	4015

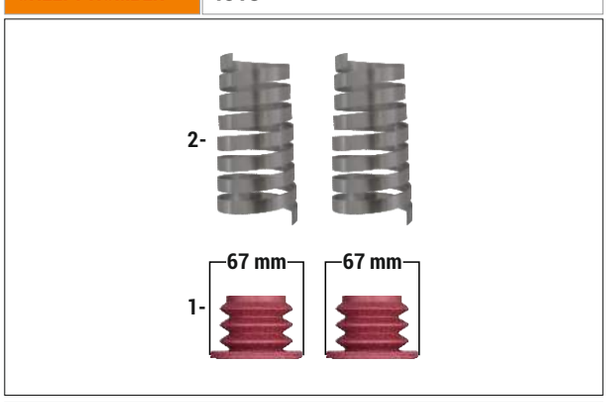

Caliper Boots & Spring Repair Kit

OEM NUMBER	HDX 89794 - 94662

NR	CHEEFT NR	DESCRIPTIONS	DIMENSION	QTY
1	4531	TAPPET DUST EXCLUDER	Ø67 mm	2
2	4561	PROTECTIVE SPRING	Ø67 mm	2

ORIGINAL PART NUMBERS,MARKS AND MODELS MENTIONED ARE ONLY FOR DESCRIPTION PURPOSES.

MARK IV (4) TYPE

CHEEFT NUMBER	4021

Caliper Adjuster Bolts & Seals Repair Kit

OEM NUMBER	HDX 90693 - 89926 - SF 3 434 3855 02 RNLT 5021 174 163

NR	CHEEFT NR	DESCRIPTIONS	DIMENSION	QTY
1	4551	PLUG		2
2	4012	ADJUSTING BOLT		2
3	4552	ADJUSTING BOLT SEAL		2

CHEEFT NUMBER	4071

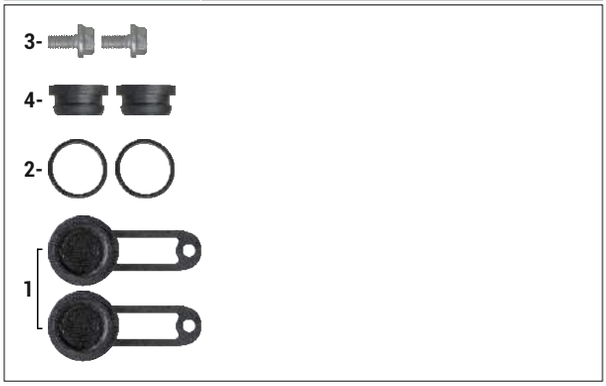

Plastic Plug Repair Kit

OEM NUMBER	HDX 87408

NR	CHEEFT NR	DESCRIPTIONS	DIMENSION	QTY
1	4575	PLASTIC CAP		2
2	4576	O-RING		2
3	4577	BOLT		2
4	4551	PLUG		2

CHEEFT NUMBER	4074

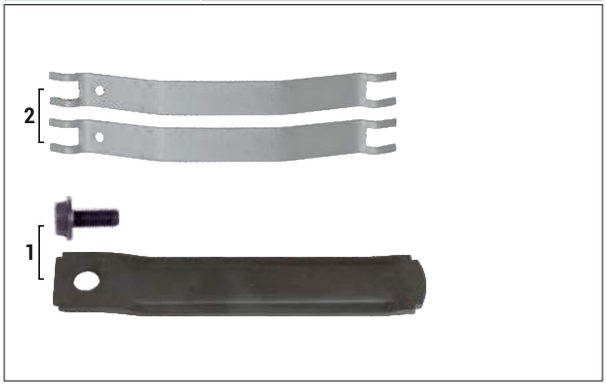

Caliper Pad Retainer Kit

OEM NUMBER	HDX 91216

NR	CHEEFT NR	DESCRIPTIONS	DIMENSION	QTY
1	4032	PAD RETAINER REPAIR KIT		1
2	4574	PAD SPRING		2

ORIGINAL PART NUMBERS,MARKS AND MODELS MENTIONED ARE ONLY FOR DESCRIPTION PURPOSES.

MARK IV (4) TYPE

CHEEFT NUMBER	4075

Caliper Pad Retainer Kit

OEM NUMBER	HDX 94659 - SF 3 434 3851 01 RNLT 5021 174 162 - 5021 174 180

NR	CHEEFT NR	DESCRIPTIONS	DIMENSION	QTY
1	4074	PAD RETAINER REPAIR KIT		2
2	4551	PLUG		2

CHEEFT NUMBER	4004

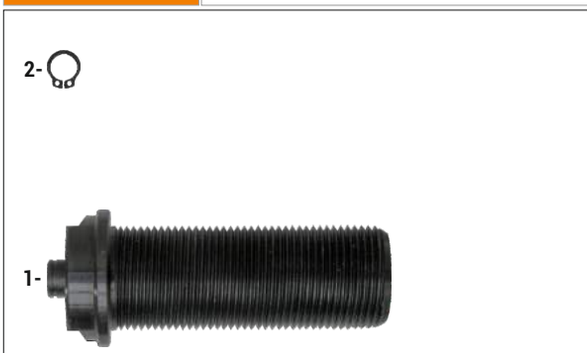

Caliper Calibration Bolt (For Push Plate)

OEM NUMBER	

NR	CHEEFT NR	DESCRIPTIONS	DIMENSION	QTY
1	4514	CALIBRATION BOLT		1
2	4557	CIRCLIP		1

CHEEFT NUMBER	4006

Caliper Calibration Bolt

OEM NUMBER	

NR	CHEEFT NR	DESCRIPTIONS	DIMENSION	QTY
1	4515	CALIBRATION BOLT		1
2	4557	CIRCLIP		1

ORIGINAL PART NUMBERS,MARKS AND MODELS MENTIONED ARE ONLY FOR DESCRIPTION PURPOSES.

MARK IV (4) TYPE

CHEEFT NUMBER	4031

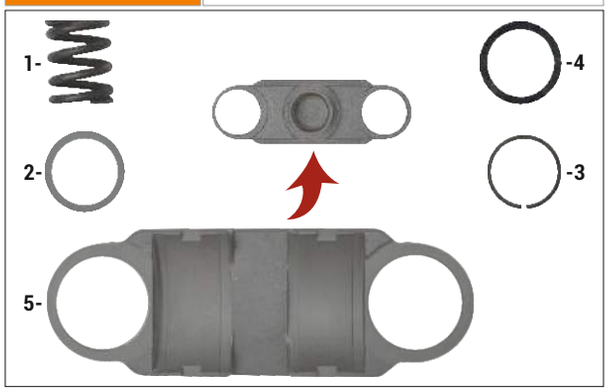

NR	CHEEFT NR	DESCRIPTIONS	DIMENSION	QTY
1	4569	SPRING		1
2	4554	WASHER		1
3	4555	CIRCLIP		1
4	4556	WASHER		1
5	4570	BRIDGE ASSEMBLY		1

Caliper Bridge Assembly Repair Kit

OEM NUMBER	HDX 2050 89611

CHEEFT NUMBER	4029

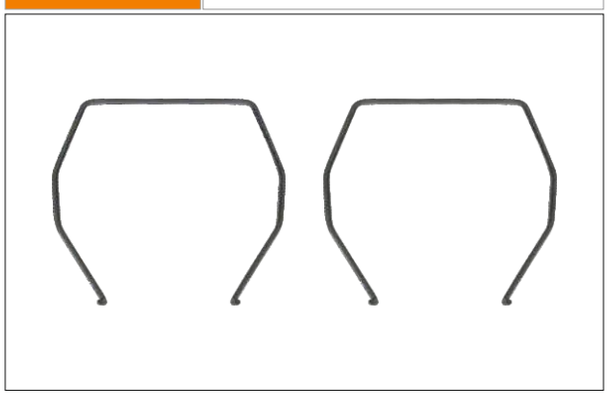

NR	CHEEFT NR	DESCRIPTIONS	DIMENSION	QTY
1	4562	MECHANISM CLAMP		2

Caliper Mechanism Clamp Kit

OEM NUMBER	

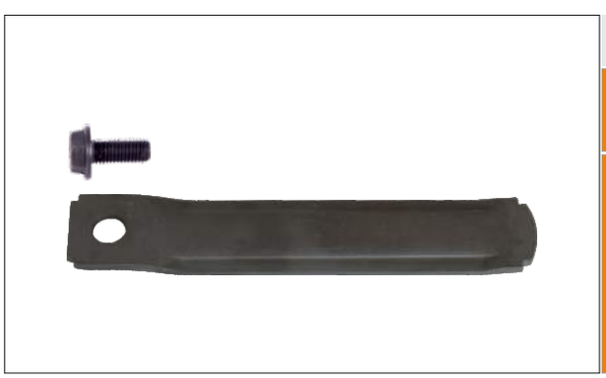

Caliper Pad Retainer Repair Kit

CHEEFT NUMBER	4032
OEM NUMBER	HDX 90673

HDX

ORIGINAL PART NUMBERS,MARKS AND MODELS MENTIONED ARE ONLY FOR DESCRIPTION PURPOSES.

MARK IV (4) TYPE

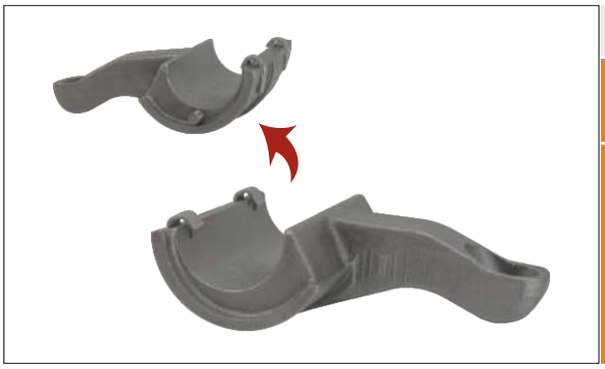

Caliper Lever	
CHEEFT NUMBER	4026
OEM NUMBER	

Caliper Roller Bearing	
CHEEFT NUMBER	4001
OEM NUMBER	

Caliper Roller Bearings	
CHEEFT NUMBER	4002
OEM NUMBER	

Caliper Adjusment Sleeve (Driven)	
CHEEFT NUMBER	4019
OEM NUMBER	

Caliper Adjusment Sleeve (Driving)	
CHEEFT NUMBER	4020
OEM NUMBER	

ORIGINAL PART NUMBERS,MARKS AND MODELS MENTIONED ARE ONLY FOR DESCRIPTION PURPOSES.

MARK IV (4) TYPE

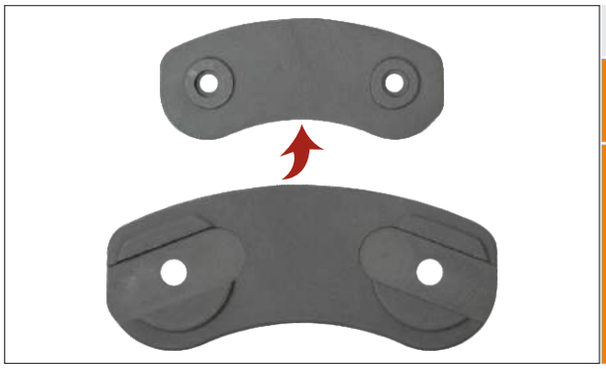

Caliper Push Plate	
CHEEFT NUMBER	4003
OEM NUMBER	

Caliper Adjusting Mechanism	
CHEEFT NUMBER	4027
OEM NUMBER	

Caliper Lever Pin	
CHEEFT NUMBER	4033
OEM NUMBER	

ORIGINAL PART NUMBERS,MARKS AND MODELS MENTIONED ARE ONLY FOR DESCRIPTION PURPOSES.

MARK IV (4) TYPE

HDX

CHEEFT NUMBER	4034

Caliper Cover

OEM NUMBER	

NR	CHEEFT NR	DESCRIPTIONS	DIMENSION	QTY
1	4509	COVER		1
2	2561	BOLT	M8 x 45 mm	4

CHEEFT NUMBER	4047

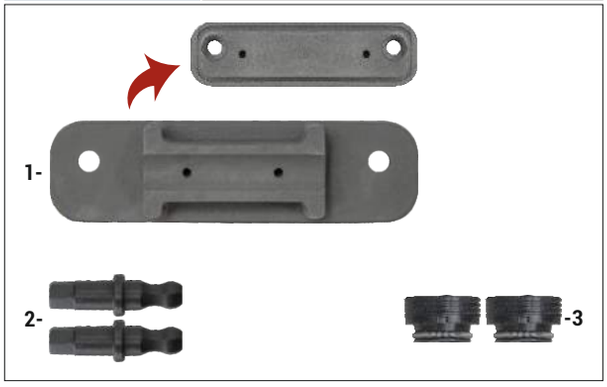

Caliper Mechanism Metal Top Cover Kit

OEM NUMBER	

NR	CHEEFT NR	DESCRIPTIONS	DIMENSION	QTY
1	4568	MECHANISM METAL TOP COVER		1
2	4012	ADJUSTING BOLT		2
3	4552	ADJUSTING BOLT SEAL		2

CHEEFT NUMBER	4046

Caliper Mechanism, Piston & Cover Kit

OEM NUMBER	

NR	CHEEFT NR	DESCRIPTIONS	DIMENSION	QTY
1	4001	ROLLER BEARING		1
2	4002	ROLLER BEARINGS		1
3	4003	PUSH PLATE		1
4	4004	CALIBRATION BOLT	(FOR PUSH PLATE)	2
5	4009	GEAR WHEEL		1
6	4015	BOOT & SPRING REPAIR KIT		1
7	4019	ADJUSTMENT SLEEVE (DRIVEN)		1
8	4020	ADJUSTMENT SLEEVE (DRIVING)		1
9	4026	LEVER		1
10	4027	ADJUSTING MECHANISM		1
11	4029	MECHANISM CLAMP		1
12	4031	BRIDGE ASSEMBLY REPAIR KIT		1
13	4033	LEVER PIN		1
14	4034	COVER		1
15	4047	MECHANISM METAL TOP		1

ORIGINAL PART NUMBERS,MARKS AND MODELS MENTIONED ARE ONLY FOR DESCRIPTION PURPOSES.

MARK IV (4) TYPE

HDX REPAIR SET

CHEEFT NUMBER CHS4002

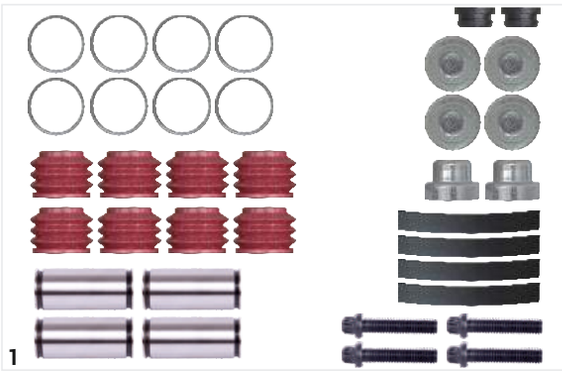

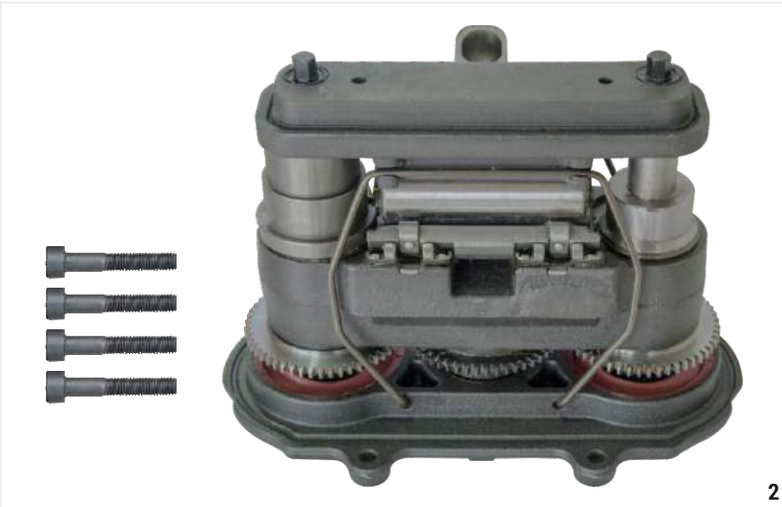

NR	CHEEFT NR	DESCRIPTIONS	QTY
1	4022	GUIDES & SEALS REPAIR KIT	1
2	4046	MECHANISM PISTON & COVER KIT	1
3	4032	PAD RETAINER REPAIR KIT	1

HDX REPAIR SET

CHEEFT NUMBER CHS4003

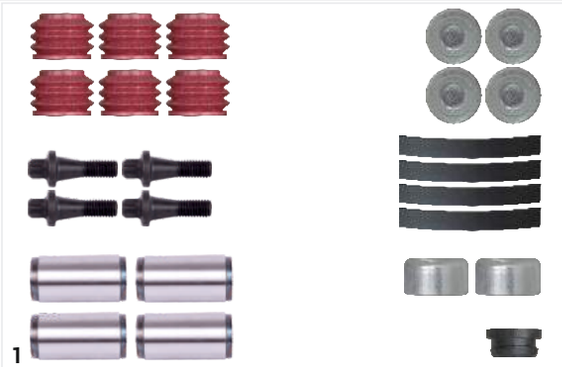

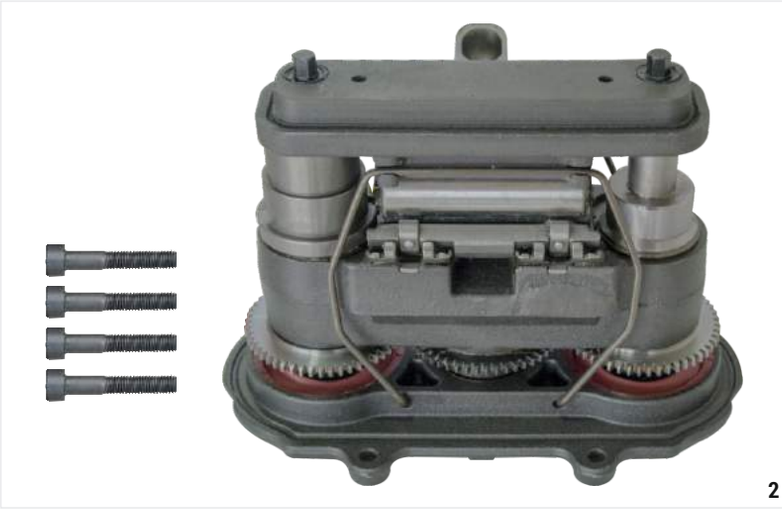

NR	CHEEFT NR	DESCRIPTIONS	QTY
1	4023	GUIDES & SEALS REPAIR KIT	1
2	4046	MECHANISM PISTON & COVER KIT	1
3	4032	PAD RETAINER REPAIR KIT	1

ORIGINAL PART NUMBERS,MARKS AND MODELS MENTIONED ARE ONLY FOR DESCRIPTION PURPOSES.

HDX

COHEEFT®
AIR DISC BRAKE CALIPER REPAIR KITS

HDX

MODUL X-GEN 1 TYPE

Always the Best...

EAC CE UDEM JAS-ANZ ISO 9001 2015

COHEEFT®

AIR DISC BRAKE CALIPER REPAIR KITS

HDX

HDX

MODUL X-GEN 1 TYPE

Always the Best...

EAC CE UDEM JAS-ANZ ISO 9001 2015

HDX

C-HEEFT®
AIR DISC BRAKE CALIPER REPAIR KITS

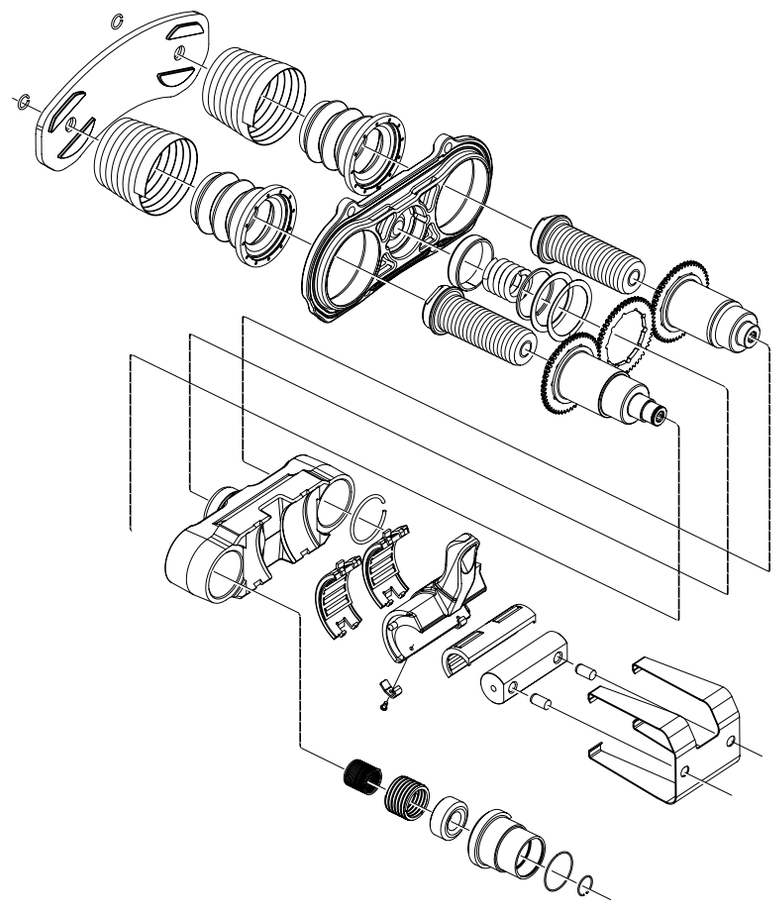

HDX

MODUL X-GEN 1 TYPE

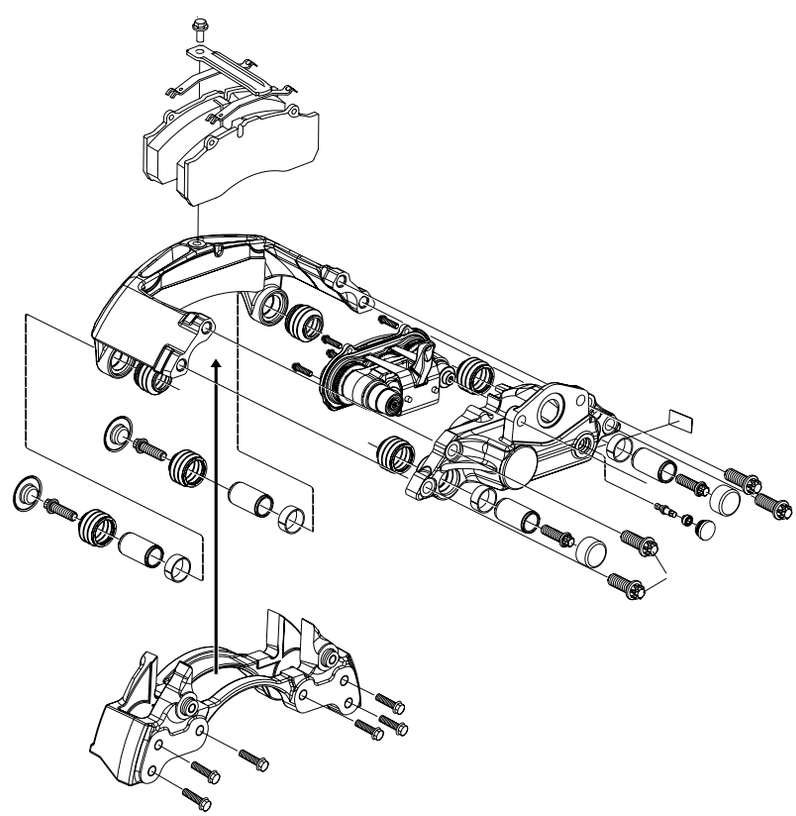

Always the Best...

EAC CE UDEM JAS-ANZ ISO 9001 2015

MODUL X-GEN 1 TYPE

CHEEFT NUMBER	4024

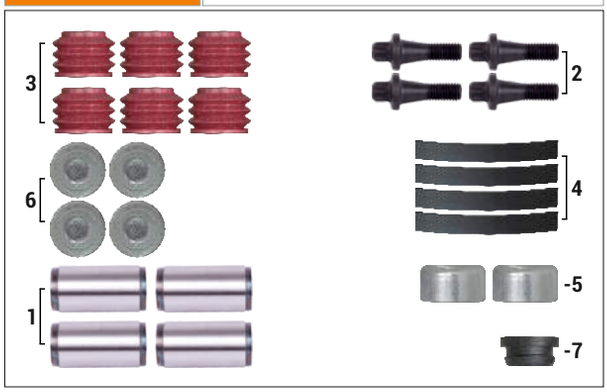

Caliper Guide & Seals Repair Kit

OEM NUMBER	HDX 93299

NR	CHEEFT NR	DESCRIPTIONS	DIMENSION	QTY
1	4503	GUIDE PIN	Ø35 x 64 mm	4
2	4511	BOLT	M14 x 2 x 42 mm	4
3	4532	GUIDE PIN DUST EXCLUDER		6
4	4521	TEFLON BUSH		4
5	4542	STEEL CAP	Ø42 x 22,5 mm	2
6	4543	STEEL CAP	Ø56 x 12,5 mm	4
7	4551	PLUG		1

CHEEFT NUMBER	4066

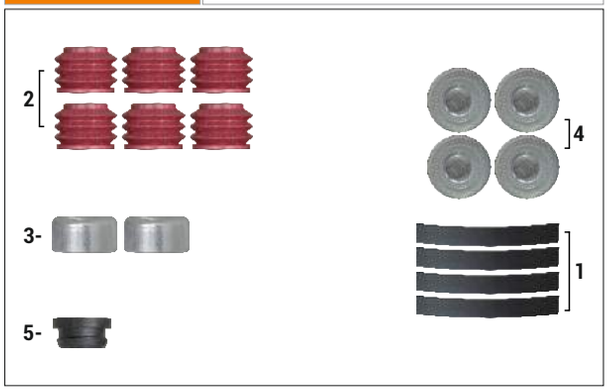

Caliper Boots & Cap Repair Kit

OEM NUMBER	HDX 91013

NR	CHEEFT NR	DESCRIPTIONS	DIMENSION	QTY
1	4521	TEFLON BUSH		4
2	4532	GUIDE PIN DUST EXCLUDER		6
3	4542	STEEL CAP	Ø42 x 22,5 mm	2
4	4543	STEEL CAP	Ø56 x 12,5 mm	4
5	4551	PLUG		1

CHEEFT NUMBER	4067

Caliper Boots & Cap Repair Kit

OEM NUMBER	HDX 91014

NR	CHEEFT NR	DESCRIPTIONS	DIMENSION	QTY
1	4532	GUIDE PIN DUST EXCLUDER		2
2	4542	STEEL CAP	Ø42 x 22,5 mm	2
3	4543	STEEL CAP	Ø56 x 12,5 mm	4
4	4521	TEFLON BUSH		1
5	4551	PLUG		1

ORIGINAL PART NUMBERS,MARKS AND MODELS MENTIONED ARE ONLY FOR DESCRIPTION PURPOSES.

MODUL X-GEN 1 TYPE

HDX

CHEEFT NUMBER	4073

Caliper Pin Bolt Repair Kit

OEM NUMBER	HDX 94660 - SF 3 434 3854 02 3 434 3856 01 - 3 434 3857 02 - 3 434 3858 01 RNLT 5021 174 174

NR	CHEEFT NR	DESCRIPTIONS	DIMENSION	QTY
1	4511	BOLT	M14 x 2 x 42 mm	4
2	4512	BOLT	M14 x 2 x 53 mm	4
3	4521	TEFLON BUSH		4
4	4532	GUIDE PIN DUST EXCLUDER		6
5	4542	STEEL CAP	Ø42 x 22,5 mm	2
6	4543	STEEL CAP	Ø56 x 12,5 mm	2
7	4551	PLUG		1

CHEEFT NUMBER	4007

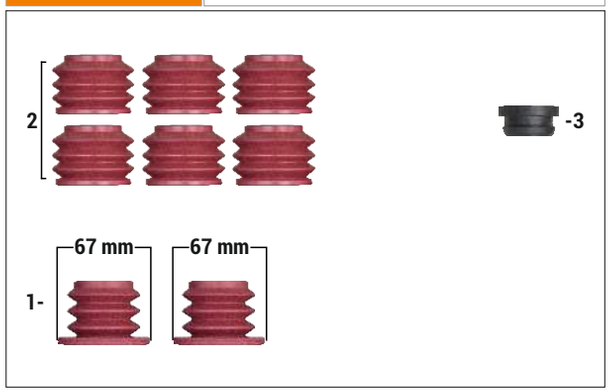

Caliper Boots Repair Kit

OEM NUMBER	

NR	CHEEFT NR	DESCRIPTIONS	DIMENSION	QTY
1	4531	TAPPET DUST EXCLUDER	Ø67 mm	2
2	4532	GUIDE PIN DUST EXCLUDER		6
3	4551	PLUG		1

CHEEFT NUMBER	4065

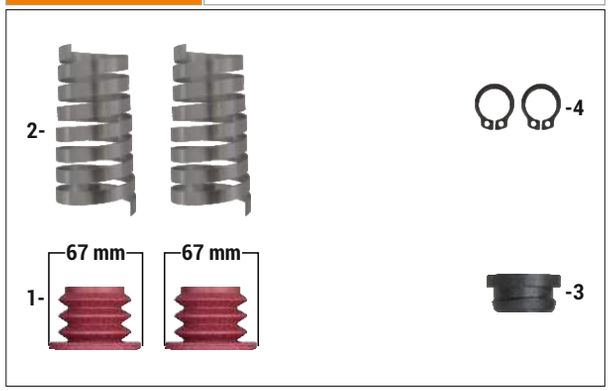

Caliper Boot Kit

OEM NUMBER	HDX 91011

NR	CHEEFT NR	DESCRIPTIONS	DIMENSION	QTY
1	4531	TAPPET DUST EXCLUDER	Ø67 mm	2
2	4561	PROTECTIVE SPRING	Ø67 mm	2
3	4551	PLUG		1
4	4557	CIRCLIP		2

ORIGINAL PART NUMBERS,MARKS AND MODELS MENTIONED ARE ONLY FOR DESCRIPTION PURPOSES.

MODUL X-GEN 1 TYPE

CHEEFT NUMBER	4015

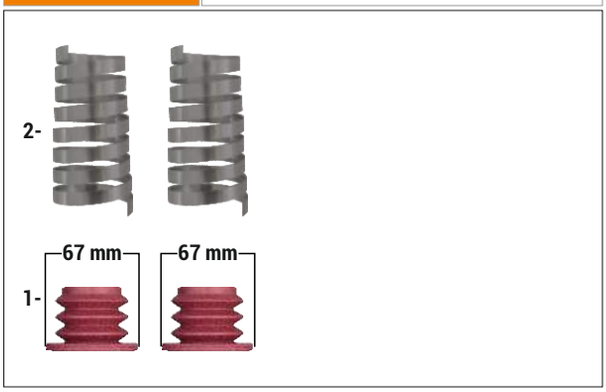

NR	CHEEFT NR	DESCRIPTIONS	DIMENSION	QTY
1	4531	TAPPET DUST EXCLUDER	Ø67 mm	2
2	4561	PROTECTIVE SPRING	Ø67 mm	2

Caliper Boots & Spring Repair Kit

OEM NUMBER	HDX 89794 - 94662

CHEEFT NUMBER	4063

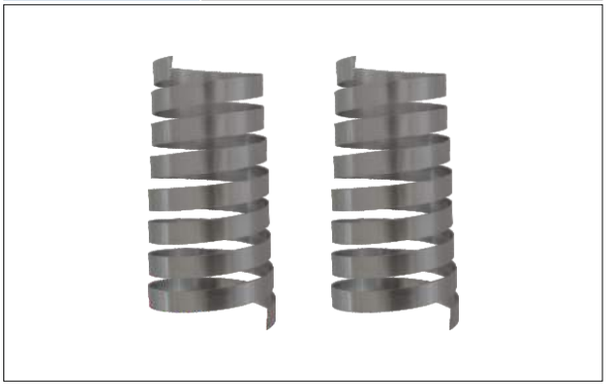

NR	CHEEFT NR	DESCRIPTIONS	DIMENSION	QTY
1	4561	PROTECTIVE SPRING	Ø67 mm	2

Protective Spring Kit

OEM NUMBER	HDX 94665

Caliper Mechanism Clamp (55 mm)

CHEEFT NUMBER	4056
OEM NUMBER	

HDX

ORIGINAL PART NUMBERS,MARKS AND MODELS MENTIONED ARE ONLY FOR DESCRIPTION PURPOSES.

MODUL X-GEN 1 TYPE

Caliper Gear Wheel

CHEEFT NUMBER	4009
OEM NUMBER	

Caliper Adjusting Bolt

CHEEFT NUMBER	4012
OEM NUMBER	HDX 94892

Caliper Adjusting Mechanism

CHEEFT NUMBER	4027
OEM NUMBER	

Caliper Pad Retainer Repair Kit

CHEEFT NUMBER	4032
OEM NUMBER	HDX 90673

Caliper Lever Pin

CHEEFT NUMBER	4057
OEM NUMBER	

ORIGINAL PART NUMBERS,MARKS AND MODELS MENTIONED ARE ONLY FOR DESCRIPTION PURPOSES.

MODUL X-GEN 1 TYPE

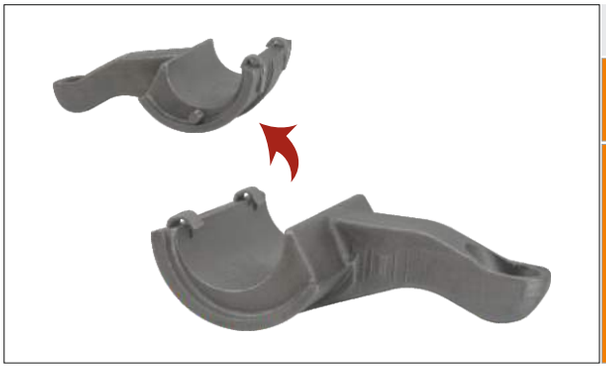

Caliper Lever	
CHEEFT NUMBER	4026
OEM NUMBER	

Caliper Roller Bearing	
CHEEFT NUMBER	4001
OEM NUMBER	

Caliper Roller Bearings	
CHEEFT NUMBER	4002
OEM NUMBER	

Caliper Adjusment Sleeve (Driving)	
CHEEFT NUMBER	4020
OEM NUMBER	

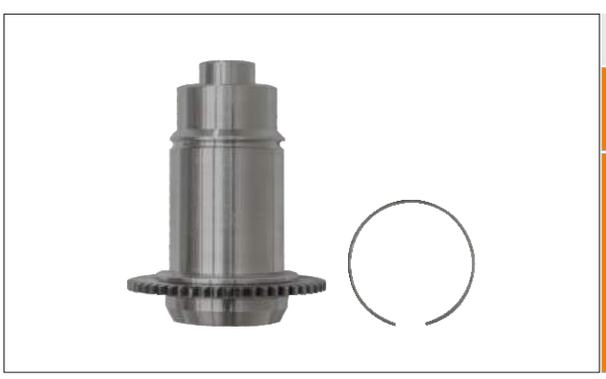

Caliper Adjusment Sleeve (Driven)	
CHEEFT NUMBER	4058
OEM NUMBER	

ORIGINAL PART NUMBERS,MARKS AND MODELS MENTIONED ARE ONLY FOR DESCRIPTION PURPOSES.

MODUL X-GEN 1 TYPE

CHEEFT NUMBER	4075

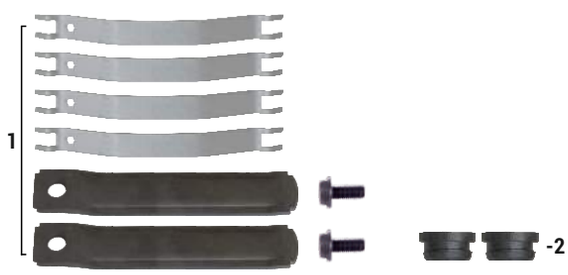

Caliper Pad Retainer Kit

OEM NUMBER	HDX 94659 - SF 3 434 3851 01 RNLT 5021 174 162 - 5021 174 180

NR	CHEEFT NR	DESCRIPTIONS	DIMENSION	QTY
1	4074	PAD RETAINER REPAIR KIT		2
2	4551	PLUG		2

CHEEFT NUMBER	4074

Caliper Pad Retainer Kit

OEM NUMBER	HDX 91216

NR	CHEEFT NR	DESCRIPTIONS	DIMENSION	QTY
1	4032	PAD RETAINER REPAIR KIT		1
2	4574	PAD SPRING		2

CHEEFT NUMBER	4004

Caliper Calibration Bolt (For Push Plate)

OEM NUMBER	

NR	CHEEFT NR	DESCRIPTIONS	DIMENSION	QTY
1	4514	CALIBRATION BOLT		1
2	4557	CIRCLIP		1

ORIGINAL PART NUMBERS,MARKS AND MODELS MENTIONED ARE ONLY FOR DESCRIPTION PURPOSES.

MODUL X-GEN 1 TYPE

CHEEFT NUMBER	4030

Caliper Cover

OEM NUMBER	

NR	CHEEFT NR	DESCRIPTIONS	DIMENSION	QTY
1	4508	COVER		1
2	4513	BOLT	M8 x 30 mm	4

CHEEFT NUMBER	4061

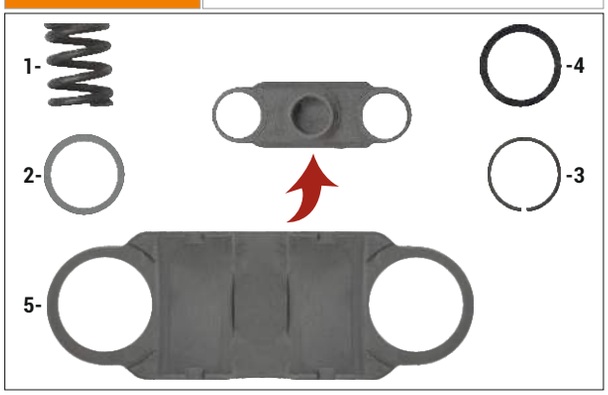

Caliper Bridge Assembly Repair Kit

OEM NUMBER	HDX 4203 89611

NR	CHEEFT NR	DESCRIPTIONS	DIMENSION	QTY
1	4563	SPRING		1
2	4554	WASHER		1
3	4555	CIRCLIP		1
4	4556	WASHER		1
5	4573	BRIDGE ASSEMBLY		1

CHEEFT NUMBER	4062

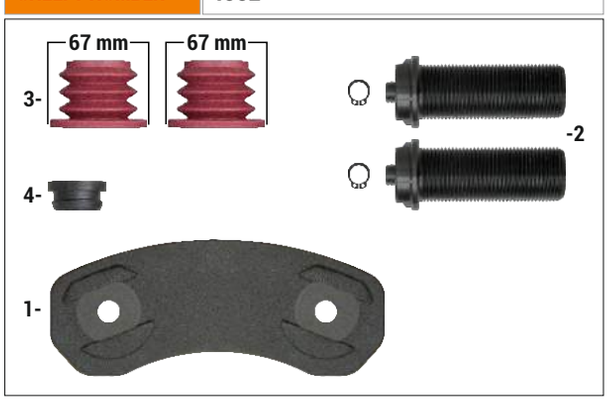

Caliper Tappet Plate & Bolt Set

OEM NUMBER	HDX 94664

NR	CHEEFT NR	DESCRIPTIONS	DIMENSION	QTY
1	4060	PUSH PLATE		1
2	4004	CALIBRATION BOLT (PUSH PLATE VERSION)		2
3	4531	TAPPET DUST COVER	(67 mm)	2
4	4551	PLUG		1

ORIGINAL PART NUMBERS,MARKS AND MODELS MENTIONED ARE ONLY FOR DESCRIPTION PURPOSES.

MODUL X-GEN 1 TYPE

HDX

CHEEFT NUMBER	4064

Caliper Push Plate & Spring Repair Kit

OEM NUMBER	HDX 92731

NR	CHEEFT NR	DESCRIPTIONS	DIMENSION	QTY
1	4060	CALIPER PUSH PLATE		1
2	4561	PROTECTIVE SPRING	Ø67 mm	2

Caliper Push Plate

CHEEFT NUMBER	4060
OEM NUMBER	

CHEEFT NUMBER	4059

Caliper Mechanism, Piston & Cover Set

OEM NUMBER	

NR	CHEEFT NR	DESCRIPTIONS	DIMENSION	QTY
1	4001	ROLLER BEARING		1
2	4002	ROLLER BEARINGS		1
3	4060	PUSH PLATE		1
4	4004	CALIBRATION BOLT		2
5	4009	GEAR WHEEL		1
6	4012	ADJUSTING BOLT		1
7	4015	DUST COVER & SPRING		1
8	4020	ADJUSMENT SLEEVE (DRIVING)		1
9	4026	LEVER		1
10	4027	ADJUSTING MECHANISM		1
11	4030	COVER		1
12	4061	BRIDGE ASSEMBLY REPAIR KIT		1
13	4056	MECHANISM CLAMP		1
14	4057	LEVER PIN		1
15	4058	ADJUSMENT SLEEVE (DRIVEN)		1
16	4551	PLUG		1
17	4552	ADJUSTING BOLT SEAL		1

ORIGINAL PART NUMBERS,MARKS AND MODELS MENTIONED ARE ONLY FOR DESCRIPTION PURPOSES.

MODUL X-GEN 1 TYPE

MODUL X-GEN 1 REPAIR SET	CHEEFT NUMBER	CHS4005

1

2

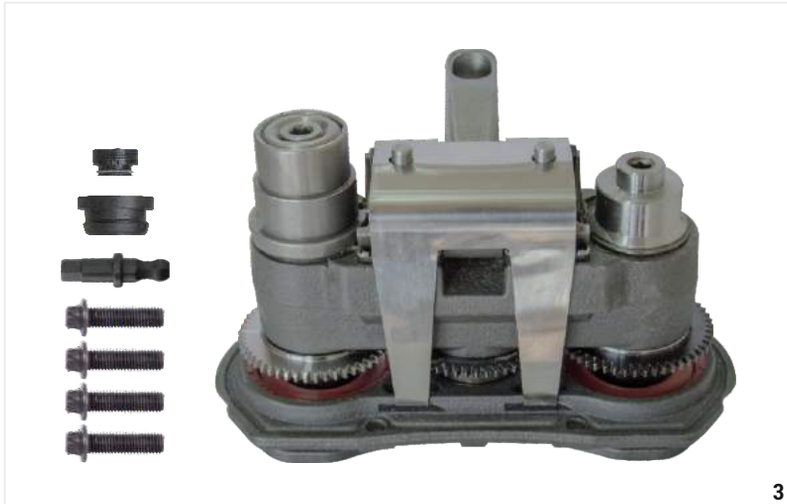
3

NR	CHEEFT NR	DESCRIPTIONS	QTY
1	4024	GUIDE & SEALS REPAIR KIT	1
2	4032	PAD RETAINER REPAIR KIT	1
3	4059	MECHANISM PISTON & COVER SET	1

ORIGINAL PART NUMBERS,MARKS AND MODELS MENTIONED ARE ONLY FOR DESCRIPTION PURPOSES.

HDX

COHEEFT®
AIR DISC BRAKE CALIPER REPAIR KITS

HDX

MODUL X-GEN 2 TYPE

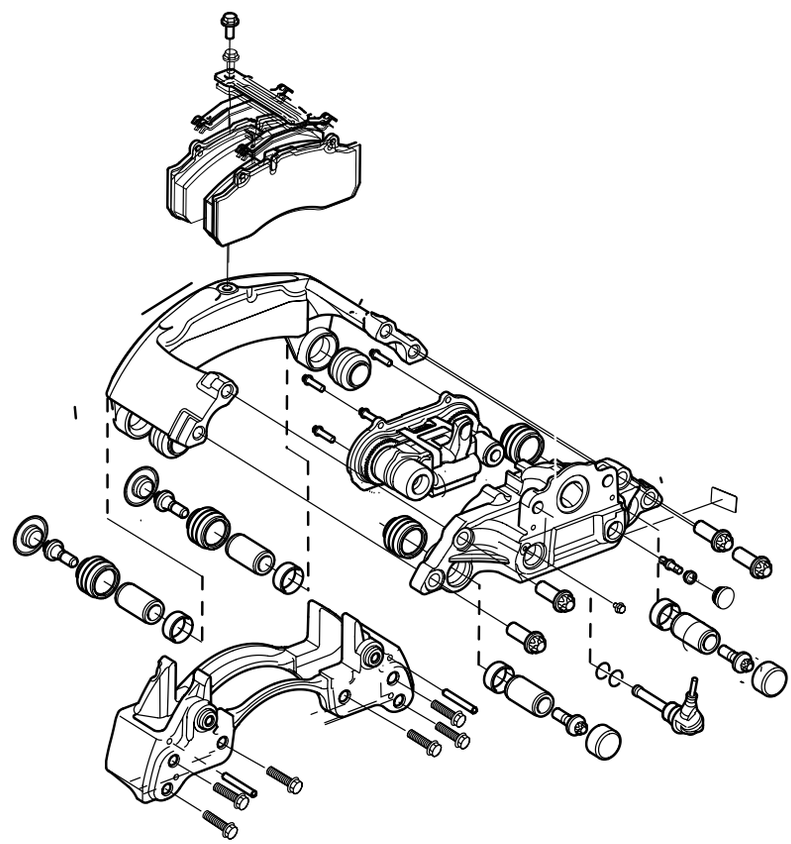

Always the Best...

EAC CE UDEM JAS-ANZ ISO 9001 2015

COHEEFT®

AIR DISC BRAKE CALIPER REPAIR KITS

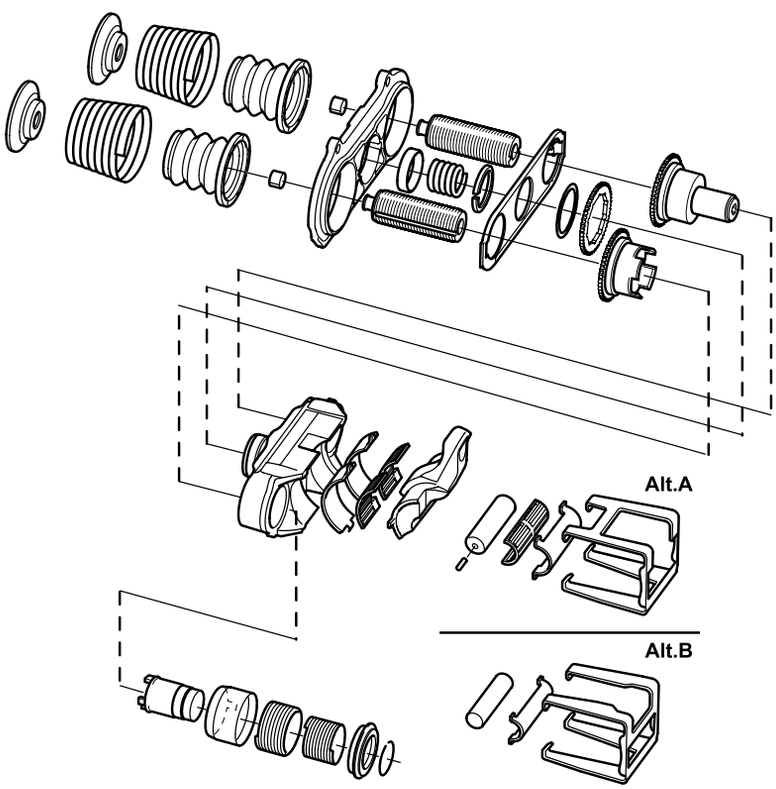

HDX

MODUL X-GEN 2 TYPE

Always the Best...

HDX

EAC CE UDEM JAS-ANZ ISO 9001 2015

MODUL X-GEN 2 TYPE

HDX

CHEEFT NUMBER	4024

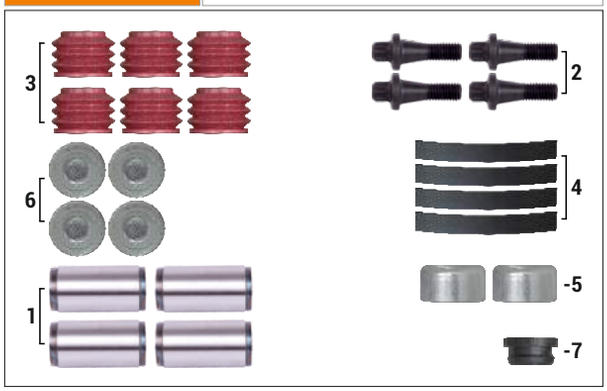

Caliper Guide & Seals Repair Kit

OEM NUMBER	HDX 93299

NR	CHEEFT NR	DESCRIPTIONS	DIMENSION	QTY
1	4503	GUIDE PIN	Ø35 x 64 mm	4
2	4511	BOLT	M14 x 2 x 42 mm	4
3	4532	GUIDE PIN DUST EXCLUDER		6
4	4521	TEFLON BUSH		4
5	4542	STEEL CAP	Ø42 x 22,5 mm	2
6	4543	STEEL CAP	Ø56 x 12,5 mm	4
7	4551	PLUG		1

CHEEFT NUMBER	4066

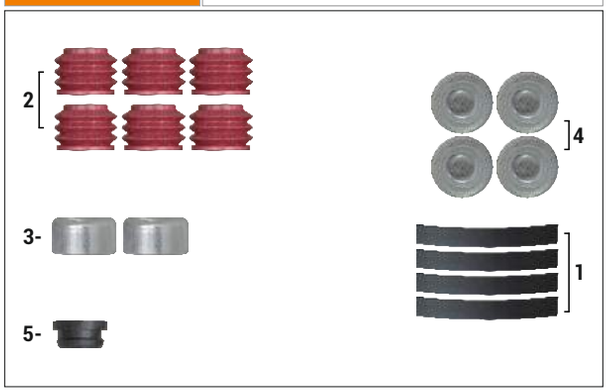

Caliper Boots & Cap Repair Kit

OEM NUMBER	HDX 91013

NR	CHEEFT NR	DESCRIPTIONS	DIMENSION	QTY
1	4521	TEFLON BUSH		4
2	4532	GUIDE PIN DUST EXCLUDER		6
3	4542	STEEL CAP	Ø42 x 22,5 mm	2
4	4543	STEEL CAP	Ø56 x 12,5 mm	4
5	4551	PLUG		1

CHEEFT NUMBER	4073

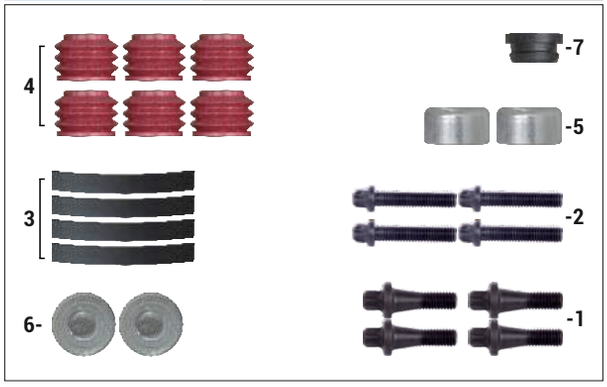

Caliper Pin Bolt Repair Kit

OEM NUMBER	HDX 94660 - SF 3 434 3854 02 3 434 3856 01 - 3 434 3857 02 - 3 434 3858 01 RNLT 5021 174 174

NR	CHEEFT NR	DESCRIPTIONS	DIMENSION	QTY
1	4511	BOLT	M14 x 2 x 42 mm	4
2	4512	BOLT	M14 x 2 x 53 mm	4
3	4521	TEFLON BUSH		4
4	4532	GUIDE PIN DUST EXCLUDER		6
5	4542	STEEL CAP	Ø42 x 22,5 mm	2
6	4543	STEEL CAP	Ø56 x 12,5 mm	2
7	4551	PLUG		1

ORIGINAL PART NUMBERS,MARKS AND MODELS MENTIONED ARE ONLY FOR DESCRIPTION PURPOSES.

MODUL X-GEN 2 TYPE

CHEEFT NUMBER	4067

Caliper Boots & Cap Repair Kit

OEM NUMBER	HDX 91014

NR	CHEEFT NR	DESCRIPTIONS	DIMENSION	QTY
1	4532	GUIDE PIN DUST EXCLUDER		2
2	4542	STEEL CAP	Ø42 x 22,5 mm	2
3	4543	STEEL CAP	Ø56 x 12,5 mm	4
4	4521	TEFLON BUSH		1
5	4551	PLUG		1

CHEEFT NUMBER	4036

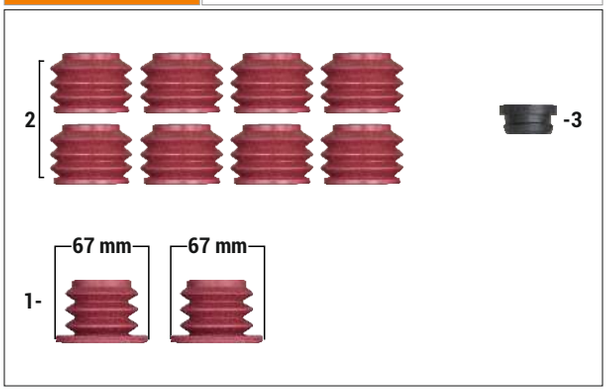

Caliper Boots Repair Kit

OEM NUMBER	

NR	CHEEFT NR	DESCRIPTIONS	DIMENSION	QTY
1	4531	TAPPET DUST EXCLUDER	Ø67 mm	2
2	4532	GUIDE PIN DUST EXCLUDER		8
3	4551	PLUG		1

CHEEFT NUMBER	4065

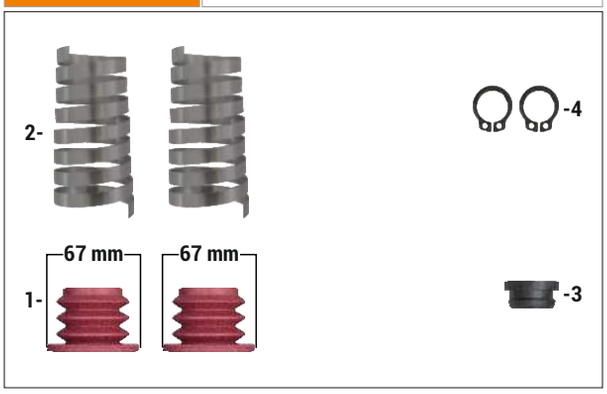

Caliper Boot Kit

OEM NUMBER	HDX 91011

NR	CHEEFT NR	DESCRIPTIONS	DIMENSION	QTY
1	4531	TAPPET DUST EXCLUDER	Ø67 mm	2
2	4561	PROTECTIVE SPRING	Ø67 mm	2
3	4551	PLUG		1
4	4557	CIRCLIP		2

ORIGINAL PART NUMBERS,MARKS AND MODELS MENTIONED ARE ONLY FOR DESCRIPTION PURPOSES.

MODUL X-GEN 2 TYPE

HDX

CHEEFT NUMBER	4015

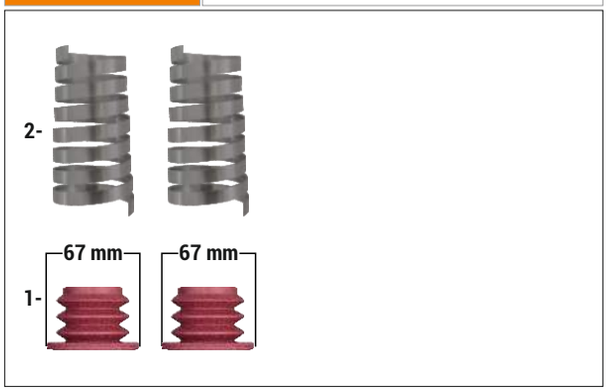

Caliper Boots & Spring Repair Kit

OEM NUMBER	HDX 89794 - 94662

NR	CHEEFT NR	DESCRIPTIONS	DIMENSION	QTY
1	4531	TAPPET DUST EXCLUDER	Ø67 mm	2
2	4561	PROTECTIVE SPRING	Ø67 mm	2

CHEEFT NUMBER	4016

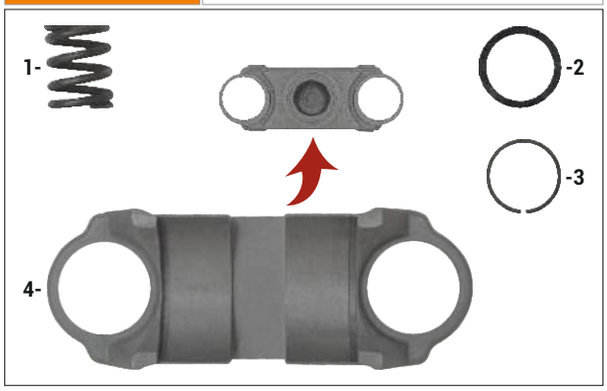

Caliper Bridge Assembly Repair Kit

OEM NUMBER	HDX 92909

NR	CHEEFT NR	DESCRIPTIONS	DIMENSION	QTY
1	4563	SPRING		1
2	4555	CIRCLIP		1
3	4556	WASHER		1
4	4571	BRIDGE ASSEMBLY		1

CHEEFT NUMBER	4030

Caliper Cover

OEM NUMBER	

NR	CHEEFT NR	DESCRIPTIONS	DIMENSION	QTY
1	4508	COVER		1
2	4513	BOLT	M8 x 30 mm	4

ORIGINAL PART NUMBERS,MARKS AND MODELS MENTIONED ARE ONLY FOR DESCRIPTION PURPOSES.

MODUL X-GEN 2 TYPE

CHEEFT NUMBER	4074

Caliper Pad Retainer Kit

OEM NUMBER	HDX 91216

NR	CHEEFT NR	DESCRIPTIONS	DIMENSION	QTY
1	4032	PAD RETAINER REPAIR KIT		1
2	4574	PAD SPRING		2

CHEEFT NUMBER	4075

Caliper Pad Retainer Kit

OEM NUMBER	HDX 94659 - SF 3 434 3851 01 RNLT 5021 174 162 - 5021 174 180

NR	CHEEFT NR	DESCRIPTIONS	DIMENSION	QTY
1	4074	PAD RETAINER REPAIR KIT		2
2	4551	PLUG		2

CHEEFT NUMBER	4083

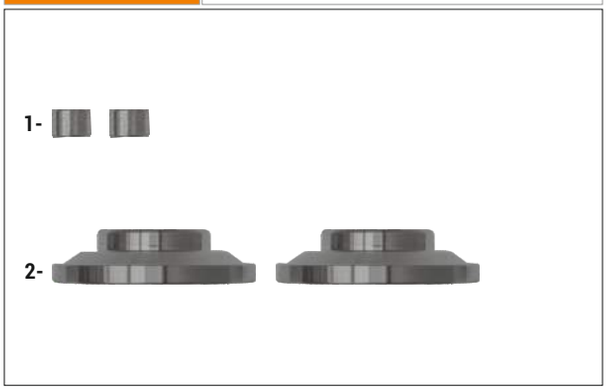

Caliper Tappet Repair Kit

OEM NUMBER	

NR	CHEEFT NR	DESCRIPTIONS	DIMENSION	QTY
1	4582	BUSH	Ø14 x Ø12 x 10 mm	2
2	4583	TAPPET	Ø64 mm	2

ORIGINAL PART NUMBERS,MARKS AND MODELS MENTIONED ARE ONLY FOR DESCRIPTION PURPOSES.

MODUL X-GEN 2 TYPE

Caliper Lever	
CHEEFT NUMBER	4025
OEM NUMBER	

Caliper Roller Bearings	
CHEEFT NUMBER	4014
OEM NUMBER	

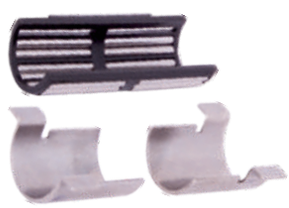

Caliper Roller Bearings	
CHEEFT NUMBER	4013
OEM NUMBER	

Caliper Calibration Bolt (Piston Version)	
CHEEFT NUMBER	4005
OEM NUMBER	

Caliper Adjustment Sleeve	
CHEEFT NUMBER	4010
OEM NUMBER	

ORIGINAL PART NUMBERS,MARKS AND MODELS MENTIONED ARE ONLY FOR DESCRIPTION PURPOSES.

MODUL X-GEN 2 TYPE

Caliper Adjusting Bolt

CHEEFT NUMBER	4012
OEM NUMBER	HDX 94892

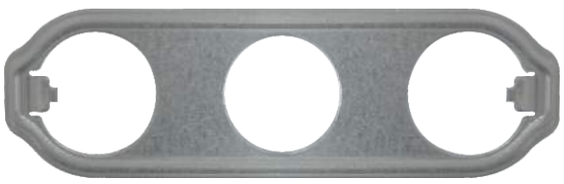

Caliper Synchronisation Plate

CHEEFT NUMBER	4017
OEM NUMBER	

Caliper Mechanism Clamp

CHEEFT NUMBER	4018
OEM NUMBER	92700

Caliper Lever Pin

CHEEFT NUMBER	4028
OEM NUMBER	

Caliper Pad Retainer Repair Kit

CHEEFT NUMBER	4032
OEM NUMBER	HDX 90673

ORIGINAL PART NUMBERS,MARKS AND MODELS MENTIONED ARE ONLY FOR DESCRIPTION PURPOSES.

MODUL X-GEN 2 TYPE

Caliper Adjustment Sleeve

CHEEFT NUMBER	4008
OEM NUMBER	

Caliper Gear Wheel

CHEEFT NUMBER	4009
OEM NUMBER	

Caliper Adjusting Mechanism

CHEEFT NUMBER	4011
OEM NUMBER	

CHEEFT NUMBER	4035

Caliper Mechanism, Piston & Cover Set

OEM NUMBER	

NR	CHEEFT NR	DESCRIPTIONS	DIMENSION	QTY
1	4005	CALIBRATION BOLT (PISTON VERSION)		2
2	4008	ADJUSTMENT SLEEVE		1
3	4009	GEAR WHEEL		1
4	4010	ADJUSTMENT SLEEVE		1
5	4011	ADJUSTING MECHANISM		1
6	4012	ADJUSTING BOLT		1
7	4013	ROLLER BEARINGS		1
8	4014	ROLLER BEARINGS		1
9	4015	BOOTS & SPRING REPAIR KIT		1
10	4016	BRIDGE ASSEMBLY REPAIR KIT		1
11	4017	SYNCHRONISATION PLATE		1
12	4018	MECHANISM CLAMP		1
13	4025	LEVER		1
14	4028	LEVER PIN		1
15	4030	COVER		1
16	4551	PLUG		1
17	4552	ADJUSTING BOLT SEAL		1

ORIGINAL PART NUMBERS,MARKS AND MODELS MENTIONED ARE ONLY FOR DESCRIPTION PURPOSES.

MODUL X-GEN 2 TYPE

TRAILER AXLE-SERIN-SERTEL	CHEEFT NUMBER	CHS4001

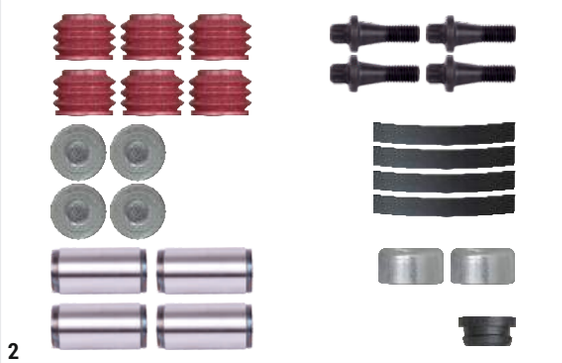

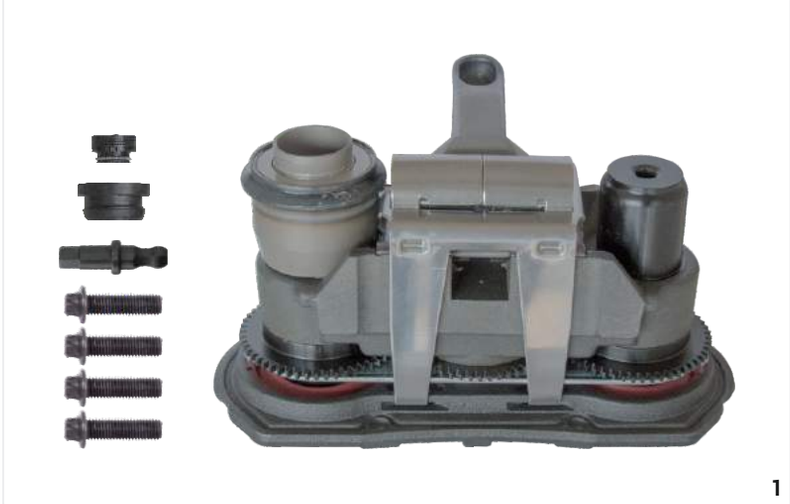

NR	CHEEFT NR	DESCRIPTIONS	QTY
1	4035	MECHANISM, PISTON & COVER SET	1
2	4024	GUIDE & SEALS REPAIR KIT	1
3	4032	PAD RETAINER REPAIR KIT	1

ORIGINAL PART NUMBERS,MARKS AND MODELS MENTIONED ARE ONLY FOR DESCRIPTION PURPOSES.

C-HEEFT®
AIR DISC BRAKE CALIPER REPAIR KITS

HDX

MODUL X-GEN 1 (OTHER) TYPE

Always the Best...

COHEEFT®
AIR DISC BRAKE CALIPER REPAIR KITS

HDX

MODUL X-GEN 1 (OTHER) TYPE

Always the Best...

EAC CE UDEM JAS-ANZ ISO 9001 2015

MODUL X-GEN 1 (OTHER) TYPE

HDX

CHEEFT NUMBER	4081

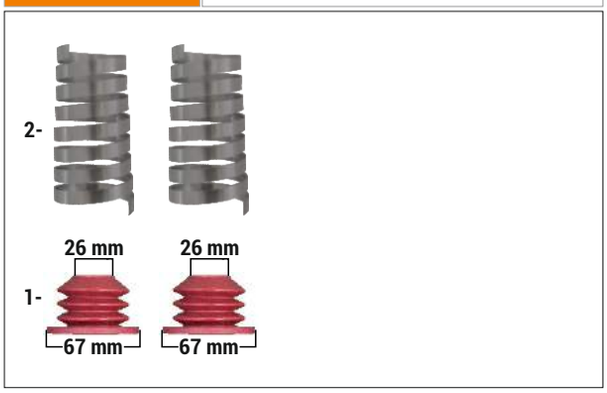

Caliper Boot & Spring Repair Kit

OEM NUMBER	

NR	CHEEFT NR	DESCRIPTIONS	DIMENSION	QTY
1	4578	TAPPET DUST EXCLUDER	Ø67 x Ø26 mm	2
2	4561	PROTECTIVE SPRING	Ø67 mm	2

CHEEFT NUMBER	4061

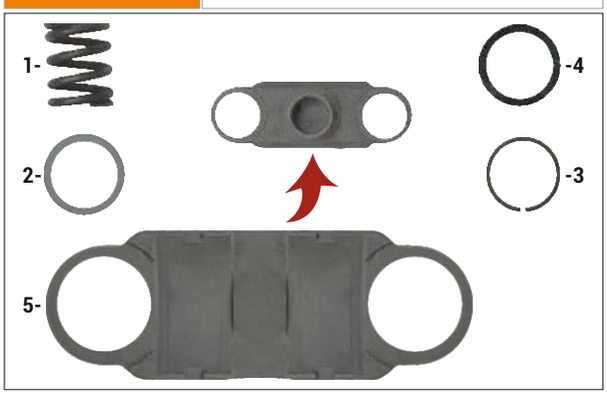

Caliper Bridge Assembly Repair Kit

OEM NUMBER	HDX 4203 89611

NR	CHEEFT NR	DESCRIPTIONS	DIMENSION	QTY
1	4563	SPRING		1
2	4554	WASHER		1
3	4555	CIRCLIP		1
4	4556	WASHER		1
5	4573	BRIDGE ASSEMBLY		1

CHEEFT NUMBER	4078

Caliper Cover

OEM NUMBER	HDX 70207

NR	CHEEFT NR	DESCRIPTIONS	DIMENSION	QTY
1	4579	COVER		1
2	4513	BOLT	M8 x 30 mm	4

ORIGINAL PART NUMBERS,MARKS AND MODELS MENTIONED ARE ONLY FOR DESCRIPTION PURPOSES.

MODUL X-GEN 1 (OTHER) TYPE

CHEEFT NUMBER	4006

Caliper Calibration Bolt

OEM NUMBER	

NR	CHEEFT NR	DESCRIPTIONS	DIMENSION	QTY
1	4515	CALIBRATION BOLT		1
2	4557	CIRCLIP		1

CHEEFT NUMBER	4082

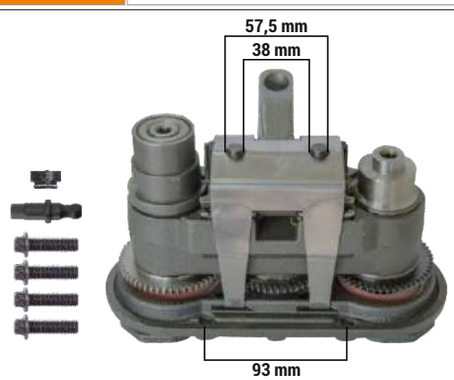

Caliper Mechanism, Piston & Cover Set

OEM NUMBER	

NR	CHEEFT NR	DESCRIPTIONS	DIMENSION	QTY
1	4001	ROLLER BEARING		1
2	4002	ROLLER BEARINGS		1
3	4077	PUSH PLATE		1
4	4006	CALIBRATION BOLT		2
5	4009	GEAR WHEEL		1
6	4012	ADJUSTING BOLT		1
7	4081	BOOT & SPRING REPAIR KIT		1
8	4020	ADJUSTMENT SLEEVE (DRIVING)		1
9	4026	LEVER		1
10	4027	ADJUSTING MECHANISM		1
11	4078	COVER (93 mm)		1
12	4061	BRIDGE ASSEMBLY REPAIR KIT		1
13	4080	MECHANISM CLAMP		1
14	4079	LEVER PIN (38 mm)		1
15	4058	ADJUSTMENT SLEEVE (DRIVEN)		1
16	4552	PLUG		1

ORIGINAL PART NUMBERS,MARKS AND MODELS MENTIONED ARE ONLY FOR DESCRIPTION PURPOSES.

MODUL X-GEN 1 (OTHER) TYPE

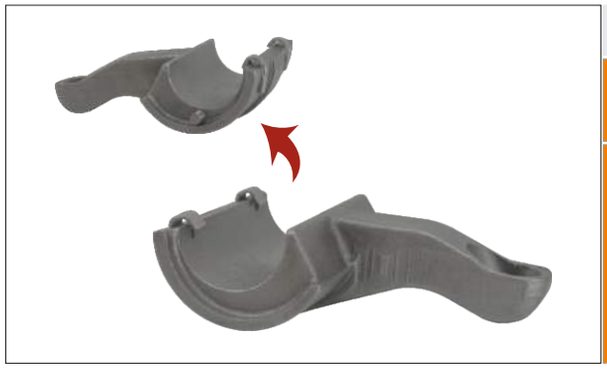

Caliper Lever	
CHEEFT NUMBER	4026
OEM NUMBER	

Caliper Roller Bearing	
CHEEFT NUMBER	4001
OEM NUMBER	

Caliper Roller Bearings	
CHEEFT NUMBER	4002
OEM NUMBER	

Caliper Lever Pin	
CHEEFT NUMBER	4079
OEM NUMBER	

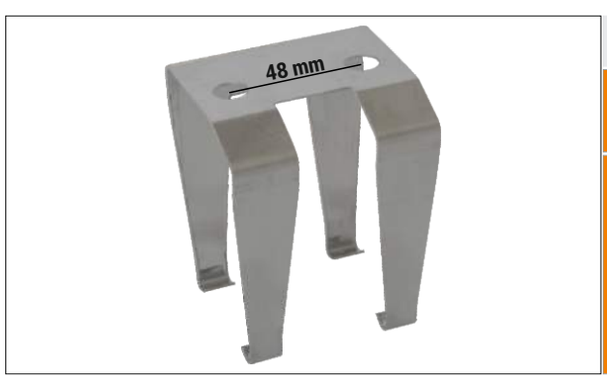

Caliper Mechanism Clamp (48 mm)	
CHEEFT NUMBER	4080
OEM NUMBER	

ORIGINAL PART NUMBERS,MARKS AND MODELS MENTIONED ARE ONLY FOR DESCRIPTION PURPOSES.

MODUL X-GEN 1 (OTHER) TYPE

Caliper Adjusment Sleeve (Driven)	
CHEEFT NUMBER	4058
OEM NUMBER	

Caliper Adjusment Sleeve (Driving)	
CHEEFT NUMBER	4020
OEM NUMBER	

Caliper Adjusting Mechanism	
CHEEFT NUMBER	4027
OEM NUMBER	

Caliper Gear Wheel	
CHEEFT NUMBER	4009
OEM NUMBER	

Caliper Adjusting Bolt	
CHEEFT NUMBER	4012
OEM NUMBER	HDX 94892

ORIGINAL PART NUMBERS,MARKS AND MODELS MENTIONED ARE ONLY FOR DESCRIPTION PURPOSES.

MODUL X-GEN 1 (OTHER) TYPE

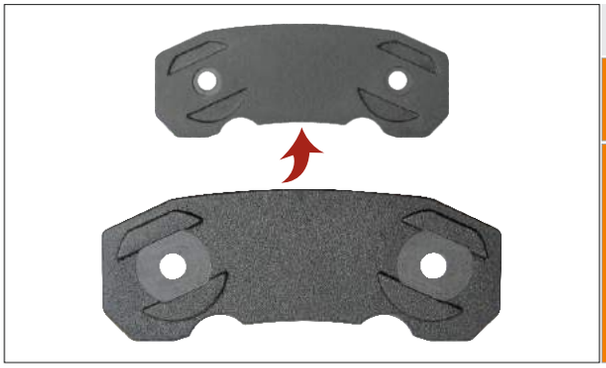

Caliper Push Plate	
CHEEFT NUMBER	4077
OEM NUMBER	

ORIGINAL PART NUMBERS,MARKS AND MODELS MENTIONED ARE ONLY FOR DESCRIPTION PURPOSES.

COHEEFT®

AIR DISC BRAKE CALIPER REPAIR KITS

HDX

HDX

CARRIERS

Always the Best...

EAC CE UDEM JAS-ANZ ISO 9001 2015

CARRIERS

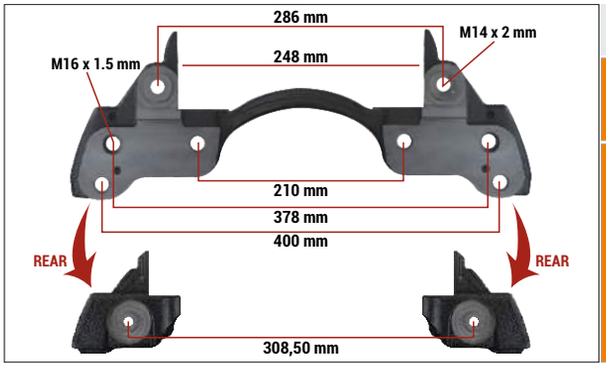

HDX Caliper Carrier 22,5 Inch (Right-Left)

CHEEFT NUMBER	4101
OEM NUMBER	HDX 90636 - 92502 MODUL X GEN 2 Trailer Axle

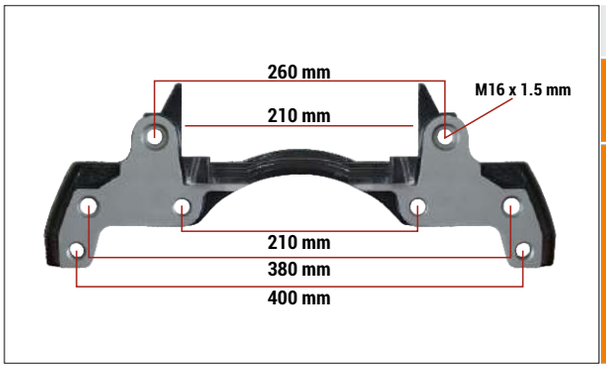

HDX Caliper Carrier For SF Axle Modul T

CHEEFT NUMBER	4102
OEM NUMBER	

ORIGINAL PART NUMBERS,MARKS AND MODELS MENTIONED ARE ONLY FOR DESCRIPTION PURPOSES.

COHEEFT®

AIR DISC BRAKE CALIPER REPAIR KITS

HDX

SETS

Always the Best...

EAC CE UDEM JAS-ANZ ISO 9001 2015

SETS

TRAILER AXLE-SERIN-SERTEL

CHEEFT NUMBER CHS4001

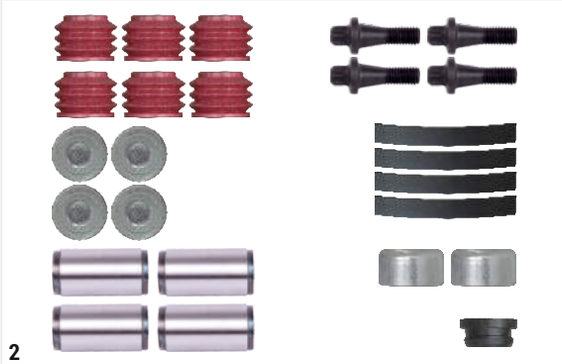

NR	CHEEFT NR	DESCRIPTIONS	QTY
1	4035	MECHANISM, PISTON & COVER SET	1
2	4024	GUIDE & SEALS REPAIR KIT	1
3	4032	PAD RETAINER REPAIR KIT	1

HDX REPAIR SET

CHEEFT NUMBER CHS4002

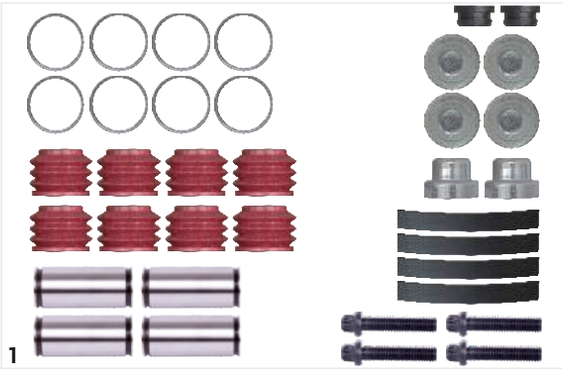

NR	CHEEFT NR	DESCRIPTIONS	QTY
1	4022	GUIDES & SEALS REPAIR KIT	1
2	4046	MECHANISM PISTON & COVER KIT	1
3	4032	PAD RETAINER REPAIR KIT	1

ORIGINAL PART NUMBERS,MARKS AND MODELS MENTIONED ARE ONLY FOR DESCRIPTION PURPOSES.

SETS

HDX REPAIR SET

CHEEFT NUMBER: CHS4003

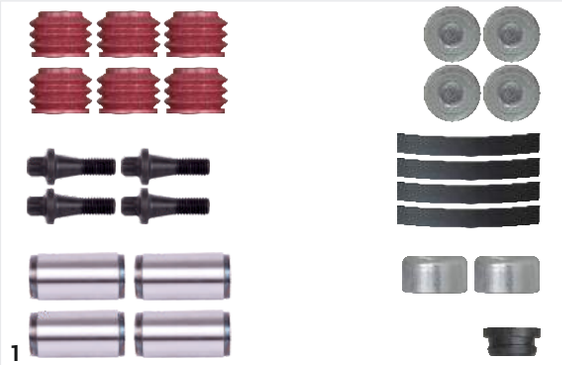

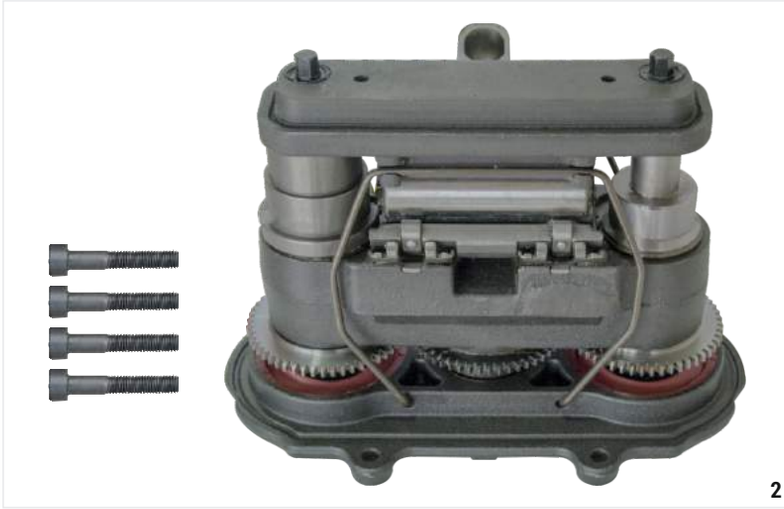

NR	CHEEFT NR	DESCRIPTIONS	QTY
1	4023	GUIDES & SEALS REPAIR KIT	1
2	4046	MECHANISM PISTON & COVER KIT	1
3	4032	PAD RETAINER REPAIR KIT	1

PISTON VERSION REPAIR SET

CHEEFT NUMBER: CHS4004

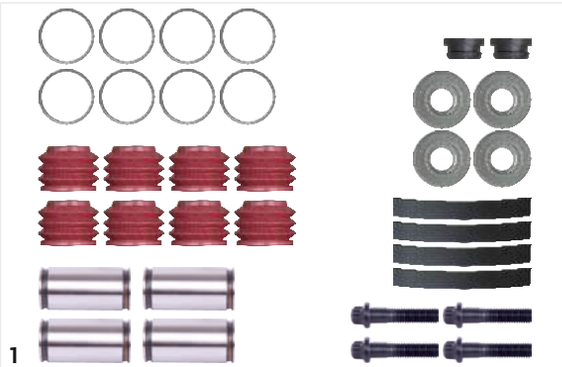

NR	CHEEFT NR	DESCRIPTIONS	QTY
1	4040	GUIDE & SEALS REPAIR KIT	1
2	4032	PAD RETAINER REPAIR KIT	1
3	4055	MECHANISM PISTON & COVER SET	1

ORIGINAL PART NUMBERS,MARKS AND MODELS MENTIONED ARE ONLY FOR DESCRIPTION PURPOSES.

SETS

MODUL X-GEN 1 REPAIR SET

CHEEFT NUMBER	CHS4005

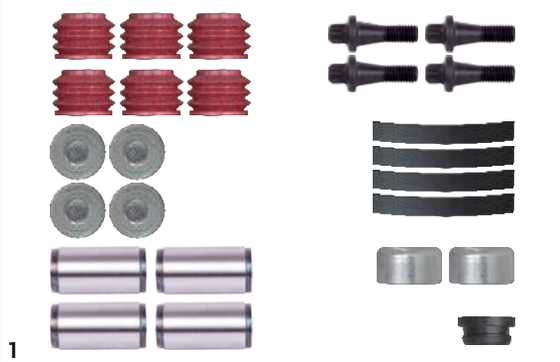

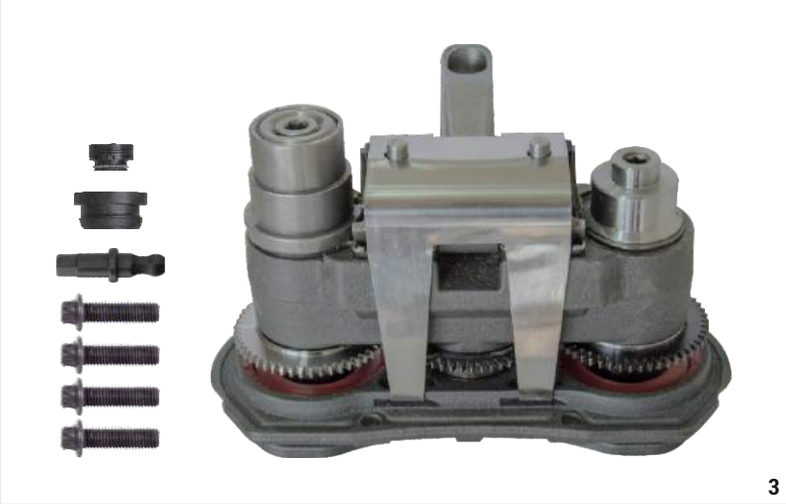

NR	CHEEFT NR	DESCRIPTIONS	QTY
1	4024	GUIDE & SEALS REPAIR KIT	1
2	4032	PAD RETAINER REPAIR KIT	1
3	4059	MECHANISM PISTON & COVER SET	1

ORIGINAL PART NUMBERS,MARKS AND MODELS MENTIONED ARE ONLY FOR DESCRIPTION PURPOSES.

COHEEFT®

AIR DISC BRAKE CALIPER REPAIR KITS

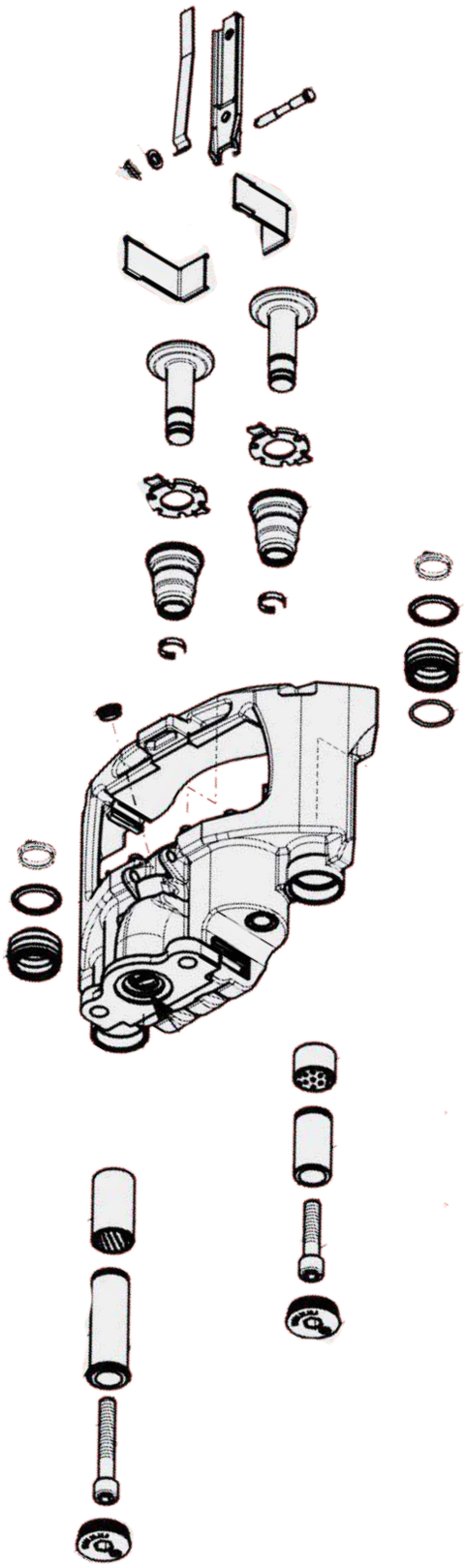

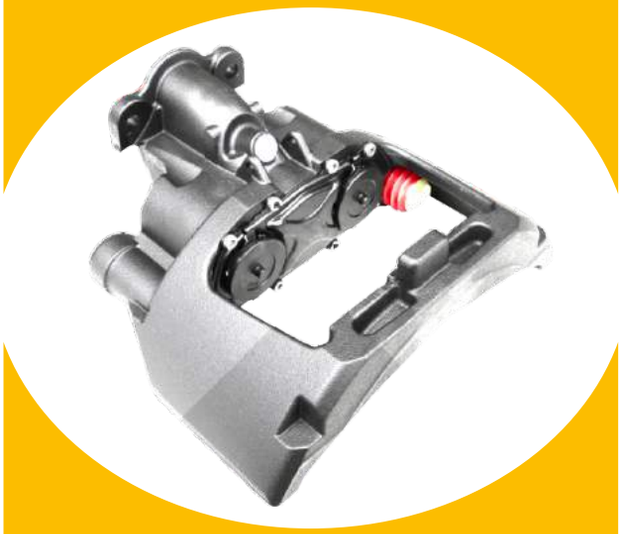

B.V

B.V

TSB 3709/4309 9 TON AXLE (WITH PIN) TYPE

Always the Best...

EAC CE UDEM JAS-ANZ ISO 9001 2015

TSB 3709/4309 9 TON AXLE (WITH PIN) TYPE

B.V

CHEEFT NUMBER	5001

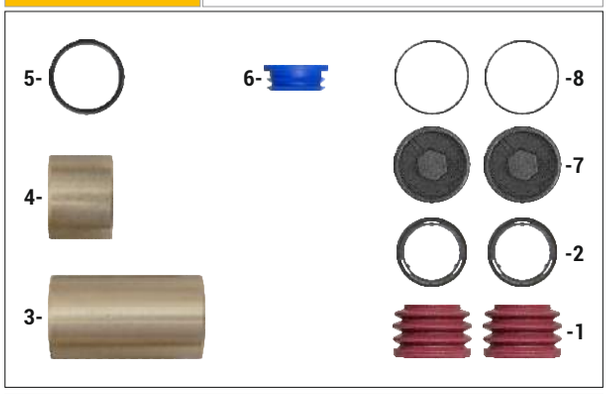

Caliper Seals Repair Kit

OEM NUMBER	B.V 09.801.07.62.0

NR	CHEEFT NR	DESCRIPTIONS	DIMENSION	QTY
1	5505	INNER BOOT		2
2	5506	PLASTIC WASHER		2
3	5507	BRONZE BUSH	Ø41 x Ø37 x 73 mm	1
4	5508	BRONZE BUSH	Ø41 x Ø37 x 30 mm	1
5	5509	O-RING		1
6	5511	PLUG		1
7	5510	PLASTIC CAP		2
8	5545	O-RING		2

CHEEFT NUMBER	5002

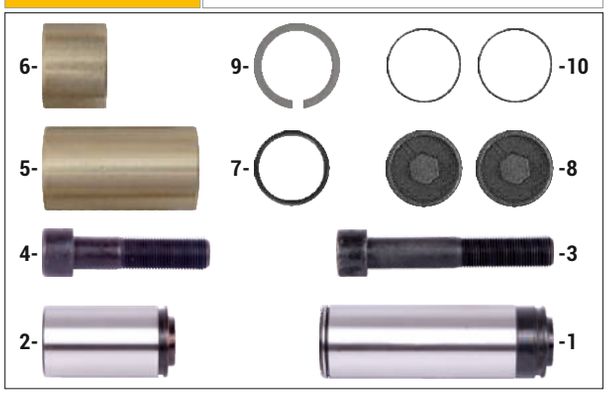

Caliper Guides Repair Kit

OEM NUMBER	B.V 09.801.07.61.0

NR	CHEEFT NR	DESCRIPTIONS	DIMENSION	QTY
1	5501	GUIDE PIN	Ø37 x 123 mm	1
2	5502	GUIDE PIN	Ø36,40 x 70 mm	1
3	5503	BOLT	M16 x 1,5 x 100 mm	1
4	1511	BOLT	M16 x 1,5 x 70 mm	1
5	5507	BRONZE BUSH	Ø41 x Ø37 x 73 mm	1
6	5508	BRONZE BUSH	Ø41 x Ø37 x 30 mm	1
7	5509	O- RING		1
8	5510	PLASTIC CAP		2
9	5518	PIN CIRCLIP	Ø43 x 1,5 mm	1
10	5545	O-RING		2

CHEEFT NUMBER	5003

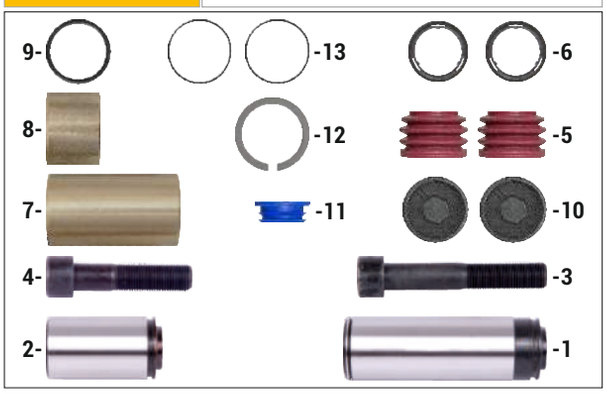

Caliper Guides & Seals Repair Kit

OEM NUMBER	

NR	CHEEFT NR	DESCRIPTIONS	DIMENSION	QTY
1	5501	GUIDE PIN	Ø37 x 123 mm	1
2	5502	GUIDE PIN	Ø36,40 x 70 mm	1
3	5503	BOLT	M16 x 1,5 x 100 mm	1
4	1511	BOLT	M16 x 1,5 x 70 mm	1
5	5505	INNER BOOT		2
6	5506	PLASTIC WASHER		2
7	5507	BRONZE BUSH	Ø41 x Ø37 x 73 mm	1
8	5508	BRONZE BUSH	Ø41 x Ø37 x 30 mm	1
9	5509	O-RING		1
10	5510	PLASTIC CAP		2
11	5511	PLUG		1
12	5518	PIN CIRCLIP	Ø43 x 1,5 mm	1
13	5545	O-RING		2

ORIGINAL PART NUMBERS,MARKS AND MODELS MENTIONED ARE ONLY FOR DESCRIPTION PURPOSES.

TSB 3709/4309 9 TON AXLE (WITH PIN) TYPE

CHEEFT NUMBER	5007

Caliper Tappet & Boot Repair Kit

OEM NUMBER	B.V 09.801.07.63.1 - 05.801.50.90.0

NR	CHEEFT NR	DESCRIPTIONS	DIMENSION	QTY
1	5519	TAPPET (WITH PIN)		2
2	5513	TAPPET BOOT		2
3	5514	LOCKER		2
4	5515	CLAMP		2

CHEEFT NUMBER	5025

Caliper Guides & Pad Retainer Repair Kit

OEM NUMBER	

NR	CHEEFT NR	DESCRIPTIONS	DIMENSION	QTY
1	5501	GUIDE PIN	Ø37 x 123 mm	1
2	5502	GUIDE PIN	Ø36,40 x 70 mm	1
3	5503	BOLT	M16 x 1,5 x 100 mm	1
4	1511	BOLT	M16 x 1,5 x 70 mm	1
5	5506	PLASTIC WASHER		2
6	5024	PAD RETAINER REPAIR KIT		1

CHEEFT NUMBER	5026

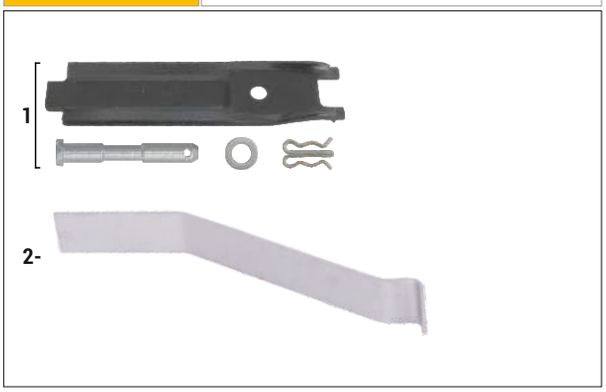

Caliper Pad Retainer Kit

OEM NUMBER	B.V 09.801.07.68.1

NR	CHEEFT NR	DESCRIPTIONS	DIMENSION	QTY
1	5024	PAD RETAINER REPAIR KIT		1
2	5532	PAD SPRING		1

ORIGINAL PART NUMBERS,MARKS AND MODELS MENTIONED ARE ONLY FOR DESCRIPTION PURPOSES.

TSB 3709/4309 9 TON AXLE (WITH PIN) TYPE

CHEEFT NUMBER	5027

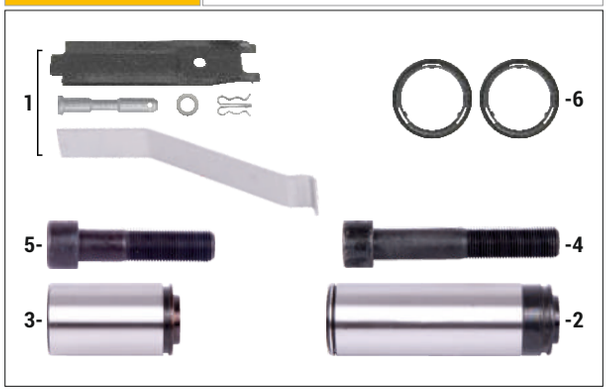

Caliper Guides & Pad Retainer Repair Kit

OEM NUMBER	B.V 09.801.05.81.0

NR	CHEEFT NR	DESCRIPTIONS	DIMENSION	QTY
1	5026	PAD RETAINER REPAIR KIT		1
2	5501	GUIDE PIN	Ø37 x 123 mm	1
3	5502	GUIDE PIN	Ø36,40 x 70 mm	1
4	5503	BOLT	M16 x 1,5 x 100 mm	1
5	1511	BOLT	M16 x 1,5 x 70 mm	1
6	5506	PLASTIC WASHER		2

B.V

CHEEFT NUMBER	5010

Caliper Cover Mechanism

OEM NUMBER	B.V 05.010.95.31.0

NR	CHEEFT NR	DESCRIPTIONS	DIMENSION	QTY
1	5520	MECHANISM COVER		1
2	1573	BOLT	M8 x 16 mm	8
3	5521	MECHANISM WASHER		1

CHEEFT NUMBER	5022

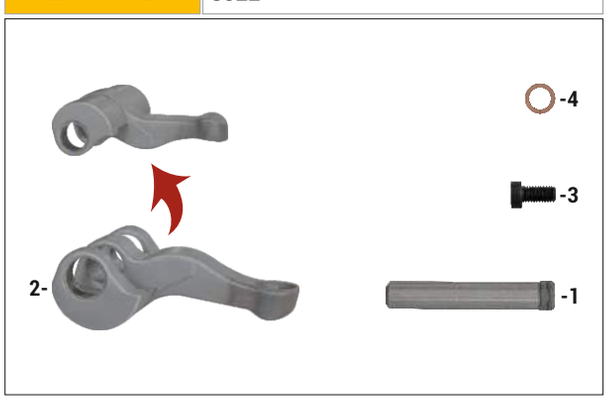

Caliper Lever Repair Kit

OEM NUMBER	

NR	CHEEFT NR	DESCRIPTIONS	DIMENSION	QTY
1	5524	LEVER PIN		1
2	5525	LEVER		1
3	1573	BOLT	M8 x 16 mm	1
4	5527	WASHER		1

ORIGINAL PART NUMBERS,MARKS AND MODELS MENTIONED ARE ONLY FOR DESCRIPTION PURPOSES.

TSB 3709/4309 9 TON AXLE (WITH PIN) TYPE

CHEEFT NUMBER	5011

Caliper Mechanism Washer Kit

OEM NUMBER	

NR	CHEEFT NR	DESCRIPTIONS	DIMENSION	QTY
1	5521	MECHANISM WASHER		10

CHEEFT NUMBER	5012

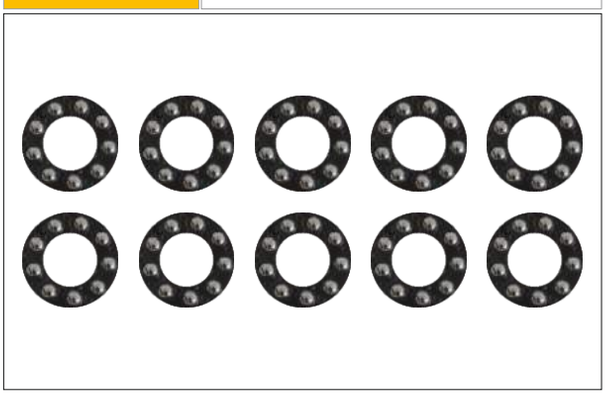

Caliper Shaft Roller Bearing Kit

OEM NUMBER	

NR	CHEEFT NR	DESCRIPTIONS	DIMENSION	QTY
1	5522	SHAFT ROLLER BEARING		10

CHEEFT NUMBER	5014

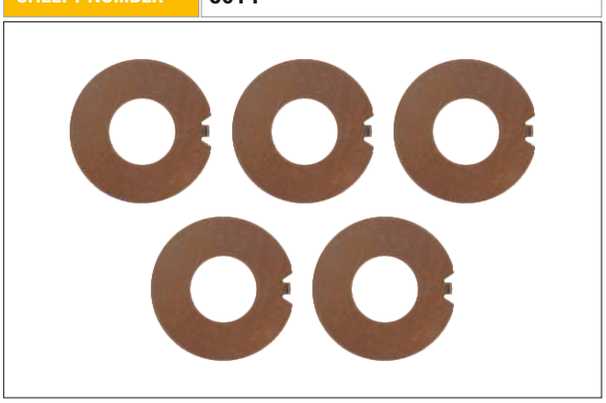

Caliper Calibration Bolt Housing Kit

OEM NUMBER	

NR	CHEEFT NR	DESCRIPTIONS	DIMENSION	QTY
1	5523	CALIBRATION BOLT HOUSING		5

ORIGINAL PART NUMBERS,MARKS AND MODELS MENTIONED ARE ONLY FOR DESCRIPTION PURPOSES.

TSB 3709/4309 9 TON AXLE (WITH PIN) TYPE

CHEEFT NUMBER	5015

Caliper Plug Kit

OEM NUMBER	

NR	CHEEFT NR	DESCRIPTIONS	DIMENSION	QTY
1	5526	PLUG		5

B.V

CHEEFT NUMBER	5031

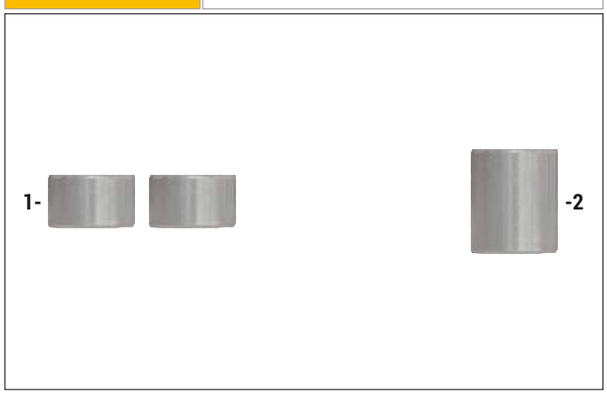

Caliper Lever Bush Kit

OEM NUMBER	

NR	CHEEFT NR	DESCRIPTIONS	DIMENSION	QTY
1	5531	BUSH	Ø20 x 18 x 12 mm	2
2	5530	BUSH	Ø20 x 18 x 20 mm	1

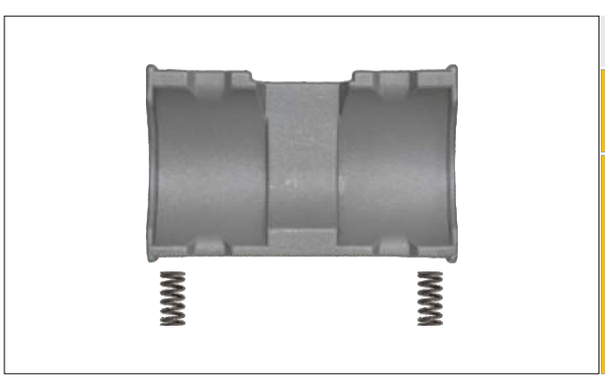

Caliper Mechanism Bearing House

CHEEFT NUMBER	5016
OEM NUMBER	

ORIGINAL PART NUMBERS,MARKS AND MODELS MENTIONED ARE ONLY FOR DESCRIPTION PURPOSES.

TSB 3709/4309 9 TON AXLE (WITH PIN) TYPE

Caliper Mechanism Housing	
CHEEFT NUMBER	5017
OEM NUMBER	B.V 01.127.38.02.0

Caliper Adjusting Mechanism	
CHEEFT NUMBER	5018
OEM NUMBER	

Caliper Pad Retainer Repair Kit	
CHEEFT NUMBER	5024
OEM NUMBER	B.V 03.001.00.54.C

Caliper Bridge Assembly	
CHEEFT NUMBER	5013
OEM NUMBER	

Caliper Roller Bearings	
CHEEFT NUMBER	5005
OEM NUMBER	

ORIGINAL PART NUMBERS,MARKS AND MODELS MENTIONED ARE ONLY FOR DESCRIPTION PURPOSES.

TSB 3709/4309 9 TON AXLE (WITH PIN) TYPE

Caliper Flat Bearings	
CHEEFT NUMBER	5006
OEM NUMBER	

Caliper Calibration Bolt	
CHEEFT NUMBER	5008
OEM NUMBER	

Caliper Mechanism Bearing House	
CHEEFT NUMBER	5009
OEM NUMBER	

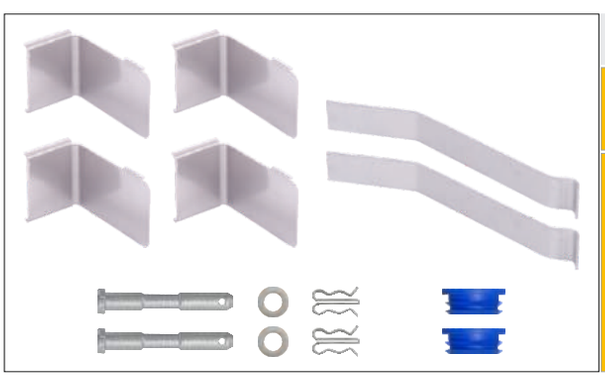

Caliper Pad Retainer Repair Kit	
CHEEFT NUMBER	5020
OEM NUMBER	

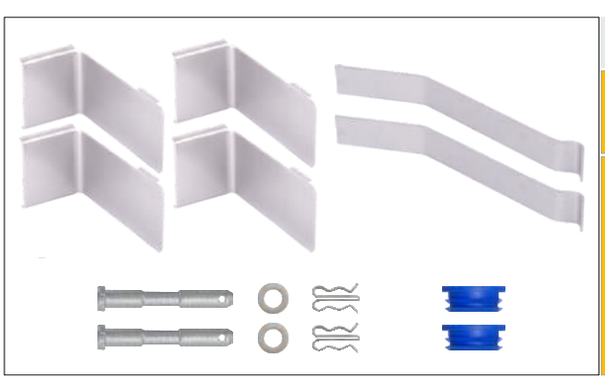

Caliper Pad Retainer Repair Kit	
CHEEFT NUMBER	5021
OEM NUMBER	

B.V

ORIGINAL PART NUMBERS,MARKS AND MODELS MENTIONED ARE ONLY FOR DESCRIPTION PURPOSES.

TSB 3709/4309 9 TON AXLE (WITH PIN) TYPE

CHEEFT NUMBER	5023

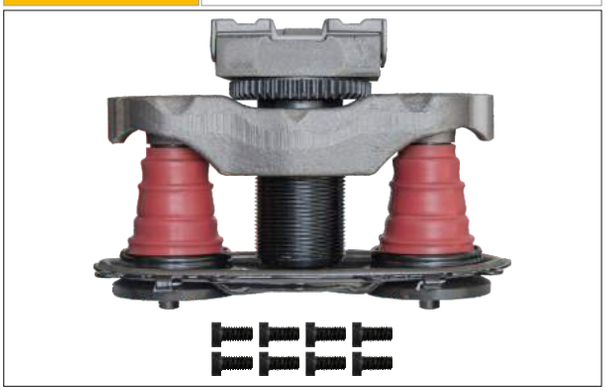

Caliper Mechanism, Piston & Cover Set (9 Ton Axle)

OEM NUMBER	

NR	CHEEFT NR	DESCRIPTIONS	DIMENSION	QTY
1	5006	FLAT BEARINGS		1
2	5007	TAPPET & BOOT REPAIR KIT		1
3	5008	CALIBRATION BOLT		1
4	5009	MECHANISM BEARING HOUSE		1
5	5010	COVER MECHANISM		1
6	5013	BRIDGE ASSEMBLY		1
7	5016	MECHANISM BEARING HOUSE		1
8	5017	MECHANISM HOUSING		1
9	5522	SHAFT ROLLER BEARING		1
10	5523	CALIBRATION BOLT HOUSING		1

B.V

CALIPER REPAIR SET (WITH PIN)

CHEEFT NUMBER	CHS5002

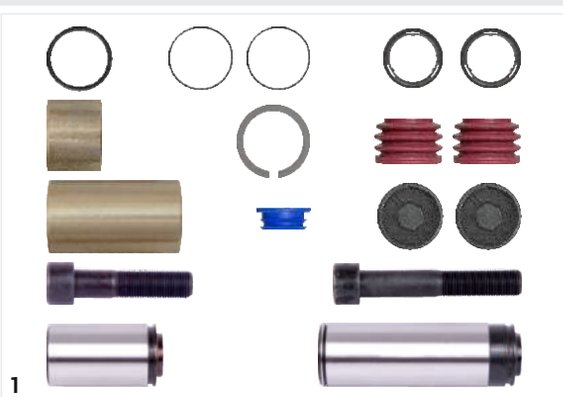

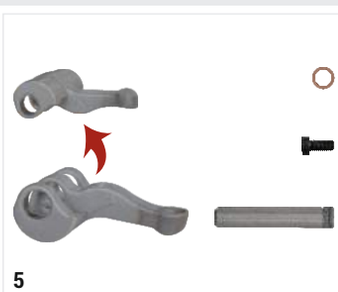

NR	CHEEFT NR	DESCRIPTIONS	QTY
1	5003	GUIDES & SEALS REPAIR KIT	1
2	5005	ROLLER BEARING	1
3	5018	ADJUSTING MECHANISM	1
4	5023	MECHANISM, PISTON & COVER KIT	1
5	5022	LEVER REPAIR KIT	1
6	5526	PLUG	2

ORIGINAL PART NUMBERS,MARKS AND MODELS MENTIONED ARE ONLY FOR DESCRIPTION PURPOSES.

COHEEFT®
AIR DISC BRAKE CALIPER REPAIR KITS

B.V

TSB 3709/4309 9 TON AXLE (WITHOUT PIN) TYPE

Always the Best...

EAC CE UDEM JAS-ANZ ISO 9001 2015

COHEEFT®

AIR DISC BRAKE CALIPER REPAIR KITS

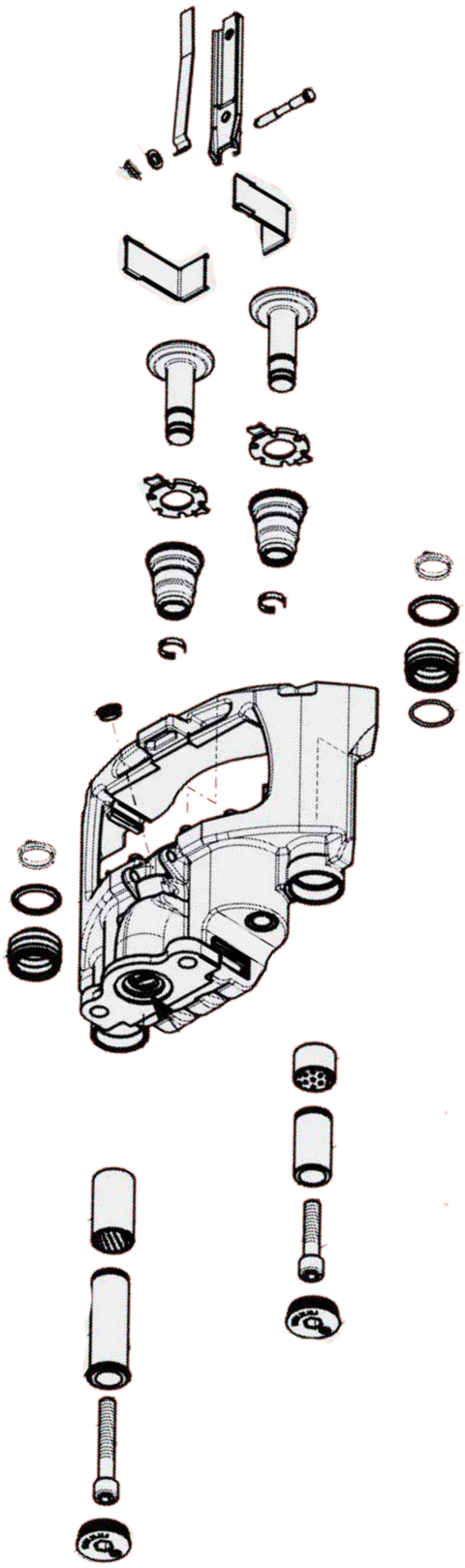

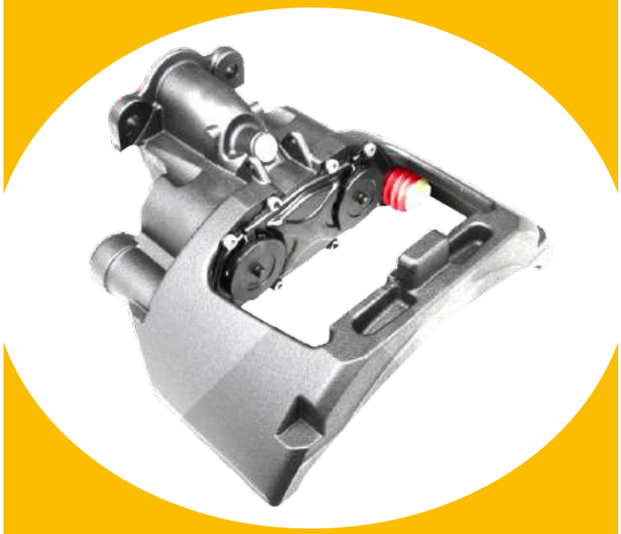

B.V

B.V

TSB 3709/4309 9 TON AXLE (WITHOUT PIN) TYPE

Always the Best...

EAC CE UDEM JAS-ANZ ISO 9001 2015

TSB 3709/4309 9 TON AXLE (WITHOUT PIN) TYPE

B.V

CHEEFT NUMBER	5001

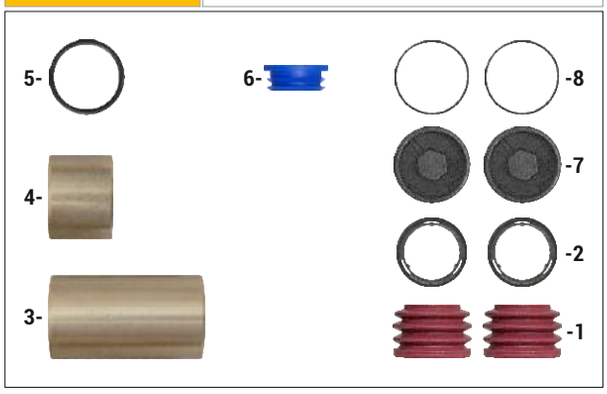

Caliper Seals Repair Kit

OEM NUMBER	B.V 09.801.07.62.0

NR	CHEEFT NR	DESCRIPTIONS	DIMENSION	QTY
1	5505	INNER BOOT		2
2	5506	PLASTIC WASHER		2
3	5507	BRONZE BUSH	Ø41 x Ø37 x 73 mm	1
4	5508	BRONZE BUSH	Ø41 x Ø37 x 30 mm	1
5	5509	O-RING		1
6	5511	PLUG		1
7	5510	PLASTIC CAP		2
8	5545	O-RING		2

CHEEFT NUMBER	5002

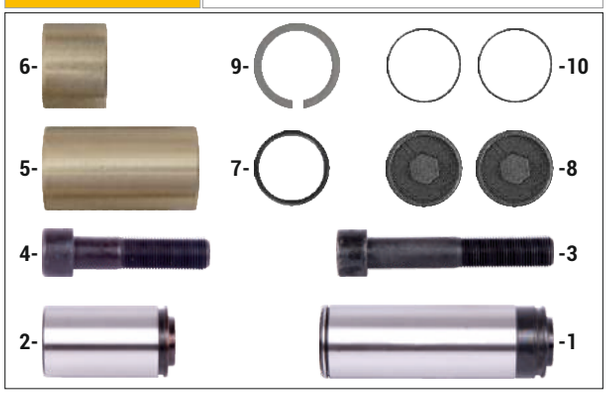

Caliper Guides Repair Kit

OEM NUMBER	B.V 09.801.07.61.0

NR	CHEEFT NR	DESCRIPTIONS	DIMENSION	QTY
1	5501	GUIDE PIN	Ø37 x 123 mm	1
2	5502	GUIDE PIN	Ø36,40 x 70 mm	1
3	5503	BOLT	M16 x 1,5 x 100 mm	1
4	1511	BOLT	M16 x 1,5 x 70 mm	1
5	5507	BRONZE BUSH	Ø41 x Ø37 x 73 mm	1
6	5508	BRONZE BUSH	Ø41 x Ø37 x 30 mm	1
7	5509	O- RING		1
8	5510	PLASTIC CAP		2
9	5518	PIN CIRCLIP	Ø43 x 1,5 mm	1
10	5545	O-RING		2

CHEEFT NUMBER	5003

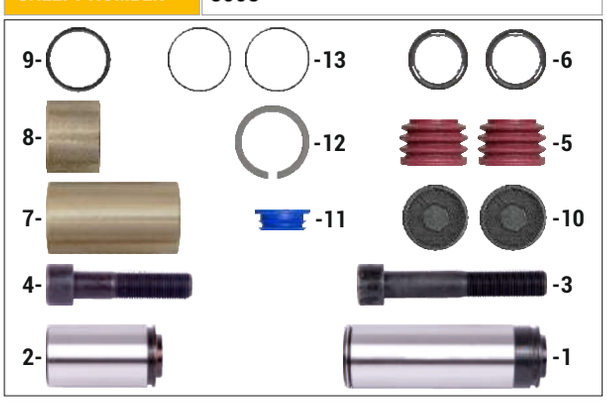

Caliper Guides & Seals Repair Kit

OEM NUMBER	

NR	CHEEFT NR	DESCRIPTIONS	DIMENSION	QTY
1	5501	GUIDE PIN	Ø37 x 123 mm	1
2	5502	GUIDE PIN	Ø36,40 x 70 mm	1
3	5503	BOLT	M16 x 1,5 x 100 mm	1
4	1511	BOLT	M16 x 1,5 x 70 mm	1
5	5505	INNER BOOT		2
6	5506	PLASTIC WASHER		2
7	5507	BRONZE BUSH	Ø41 x Ø37 x 73 mm	1
8	5508	BRONZE BUSH	Ø41 x Ø37 x 30 mm	1
9	5509	O-RING		1
10	5510	PLASTIC CAP		2
11	5511	PLUG		1
12	5518	PIN CIRCLIP	Ø43 x 1,5 mm	1
13	5545	O-RING		2

ORIGINAL PART NUMBERS,MARKS AND MODELS MENTIONED ARE ONLY FOR DESCRIPTION PURPOSES.

TSB 3709/4309 9 TON AXLE (WITHOUT PIN) TYPE

CHEEFT NUMBER	5004

Caliper Tappet & Boot Repair Kit

OEM NUMBER	B.V 09.801.07.63.0

NR	CHEEFT NR	DESCRIPTIONS	DIMENSION	QTY
1	5512	TAPPET		2
2	5513	TAPPET BOOT		2
3	5514	LOCKER		2
4	5515	CLAMP		2

CHEEFT NUMBER	5025

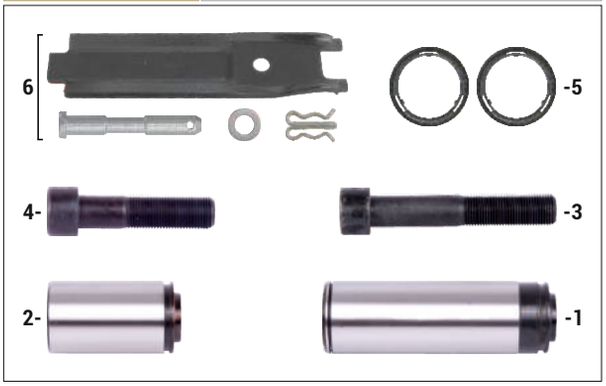

Caliper Guides & Pad Retainer Repair Kit

OEM NUMBER	

NR	CHEEFT NR	DESCRIPTIONS	DIMENSION	QTY
1	5501	GUIDE PIN	Ø37 x 123 mm	1
2	5502	GUIDE PIN	Ø36,40 x 70 mm	1
3	5503	BOLT	M16 x 1,5 x 100 mm	1
4	1511	BOLT	M16 x 1,5 x 70 mm	1
5	5506	PLASTIC WASHER		2
6	5024	PAD RETAINER REPAIR KIT		1

CHEEFT NUMBER	5026

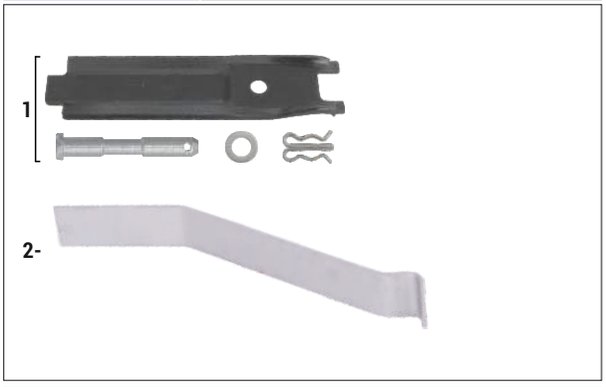

Caliper Pad Retainer Kit

OEM NUMBER	B.V 09.801.07.68.1

NR	CHEEFT NR	DESCRIPTIONS	DIMENSION	QTY
1	5024	PAD RETAINER REPAIR KIT		1
2	5532	PAD SPRING		1

ORIGINAL PART NUMBERS,MARKS AND MODELS MENTIONED ARE ONLY FOR DESCRIPTION PURPOSES.

TSB 3709/4309 9 TON AXLE (WITHOUT PIN) TYPE

CHEEFT NUMBER	5027

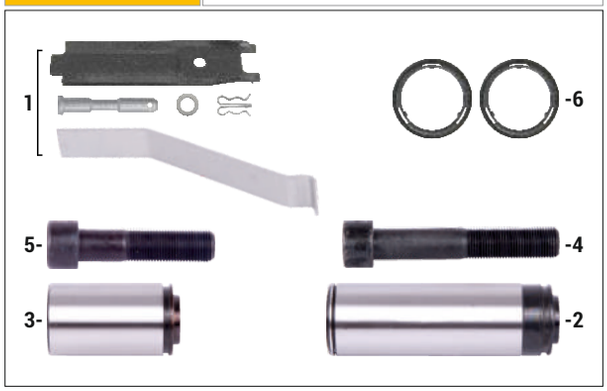

Caliper Guides & Pad Retainer Repair Kit

OEM NUMBER	B.V 09.801.05.81.0

NR	CHEEFT NR	DESCRIPTIONS	DIMENSION	QTY
1	5026	PAD RETAINER REPAIR KIT		1
2	5501	GUIDE PIN	Ø37 x 123 mm	1
3	5502	GUIDE PIN	Ø36,40 x 70 mm	1
4	5503	BOLT	M16 x 1,5 x 100 mm	1
5	1511	BOLT	M16 x 1,5 x 70 mm	1
6	5506	PLASTIC WASHER		2

B.V

CHEEFT NUMBER	5010

Caliper Cover Mechanism

OEM NUMBER	B.V 05.010.95.31.0

NR	CHEEFT NR	DESCRIPTIONS	DIMENSION	QTY
1	5520	MECHANISM COVER		1
2	1573	BOLT	M8 x 16 mm	8
3	5521	MECHANISM WASHER		1

CHEEFT NUMBER	5022

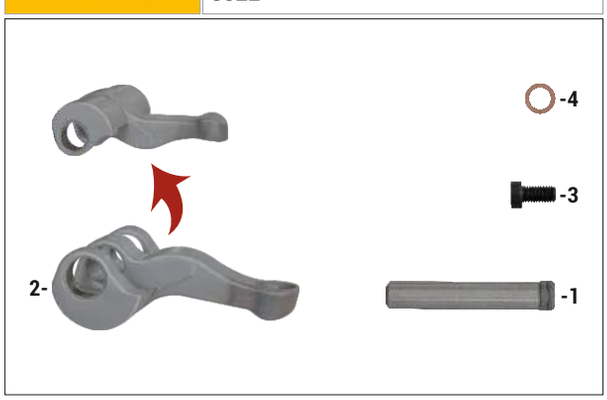

Caliper Lever Repair Kit

OEM NUMBER	

NR	CHEEFT NR	DESCRIPTIONS	DIMENSION	QTY
1	5524	LEVER PIN		1
2	5525	LEVER		1
3	1573	BOLT	M8 x 16 mm	1
4	5527	WASHER		1

ORIGINAL PART NUMBERS,MARKS AND MODELS MENTIONED ARE ONLY FOR DESCRIPTION PURPOSES.

TSB 3709/4309 9 TON AXLE (WITHOUT PIN) TYPE

CHEEFT NUMBER	5011

Caliper Mechanism Washer Kit

OEM NUMBER	

NR	CHEEFT NR	DESCRIPTIONS	DIMENSION	QTY
1	5521	MECHANISM WASHER		10

CHEEFT NUMBER	5012

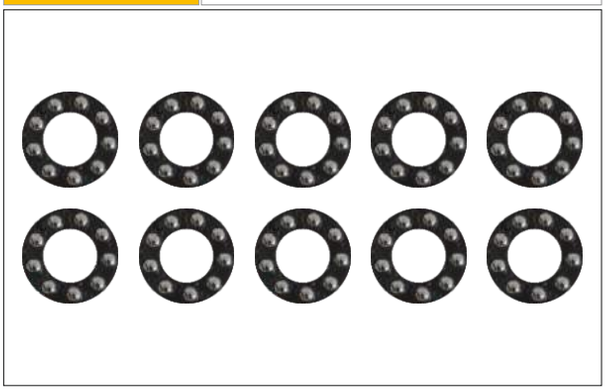

Caliper Shaft Roller Bearing Kit

OEM NUMBER	

NR	CHEEFT NR	DESCRIPTIONS	DIMENSION	QTY
1	5522	SHAFT ROLLER BEARING		10

CHEEFT NUMBER	5014

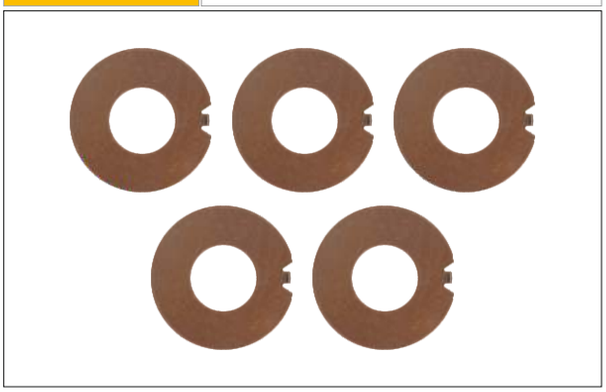

Caliper Calibration Bolt Housing Kit

OEM NUMBER	

NR	CHEEFT NR	DESCRIPTIONS	DIMENSION	QTY
1	5523	CALIBRATION BOLT HOUSING		5

ORIGINAL PART NUMBERS,MARKS AND MODELS MENTIONED ARE ONLY FOR DESCRIPTION PURPOSES.

TSB 3709/4309 9 TON AXLE (WITHOUT PIN) TYPE

CHEEFT NUMBER	5015

Caliper Plug Kit

OEM NUMBER	

NR	CHEEFT NR	DESCRIPTIONS	DIMENSION	QTY
1	5526	PLUG		5

B.V

CHEEFT NUMBER	5031

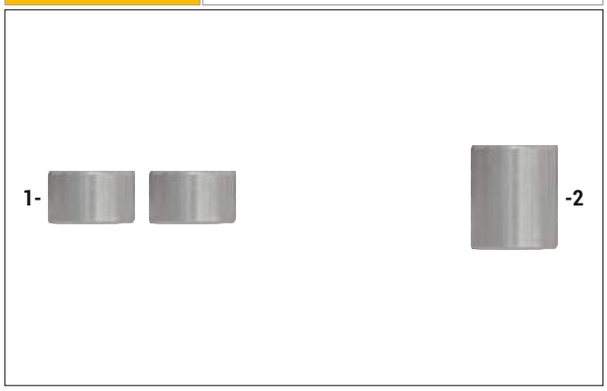

Caliper Lever Bush Kit

OEM NUMBER	

NR	CHEEFT NR	DESCRIPTIONS	DIMENSION	QTY
1	5531	BUSH	Ø20 x 18 x 12 mm	2
2	5530	BUSH	Ø20 x 18 x 20 mm	1

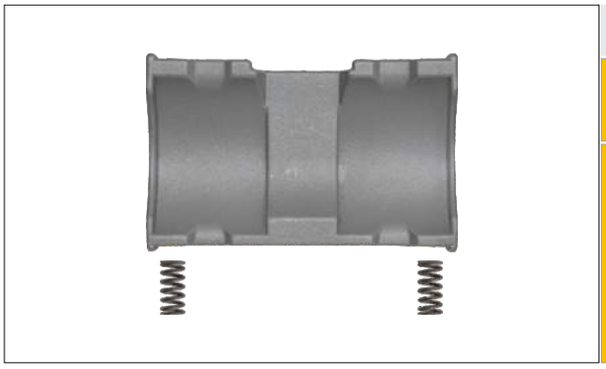

Caliper Mechanism Bearing House

CHEEFT NUMBER	5016
OEM NUMBER	

ORIGINAL PART NUMBERS,MARKS AND MODELS MENTIONED ARE ONLY FOR DESCRIPTION PURPOSES.

TSB 3709/4309 9 TON AXLE (WITHOUT PIN) TYPE

Caliper Mechanism Housing

CHEEFT NUMBER	5017
OEM NUMBER	B.V 01.127.38.02.0

Caliper Adjusting Mechanism

CHEEFT NUMBER	5018
OEM NUMBER	

Caliper Pad Retainer Repair Kit

CHEEFT NUMBER	5024
OEM NUMBER	B.V 03.001.00.54.C

Caliper Bridge Assembly

CHEEFT NUMBER	5013
OEM NUMBER	

Caliper Roller Bearings

CHEEFT NUMBER	5005
OEM NUMBER	

ORIGINAL PART NUMBERS,MARKS AND MODELS MENTIONED ARE ONLY FOR DESCRIPTION PURPOSES.

TSB 3709/4309 9 TON AXLE (WITHOUT PIN) TYPE

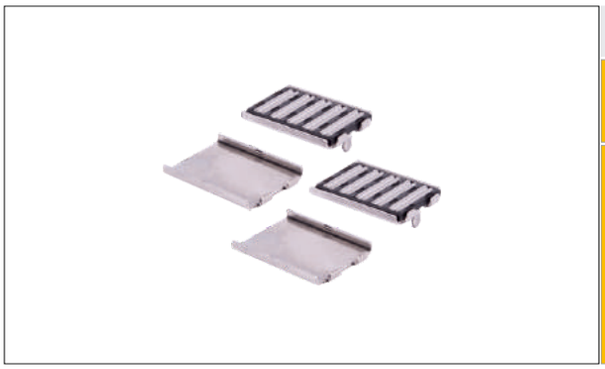

Caliper Flat Bearings	
CHEEFT NUMBER	5006
OEM NUMBER	

Caliper Calibration Bolt	
CHEEFT NUMBER	5008
OEM NUMBER	

Caliper Mechanism Bearing House	
CHEEFT NUMBER	5009
OEM NUMBER	

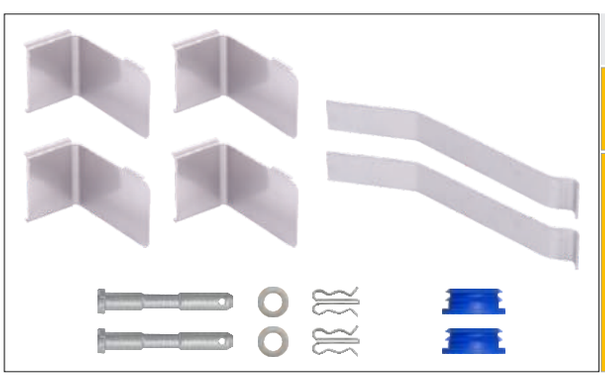

Caliper Pad Retainer Repair Kit	
CHEEFT NUMBER	5020
OEM NUMBER	

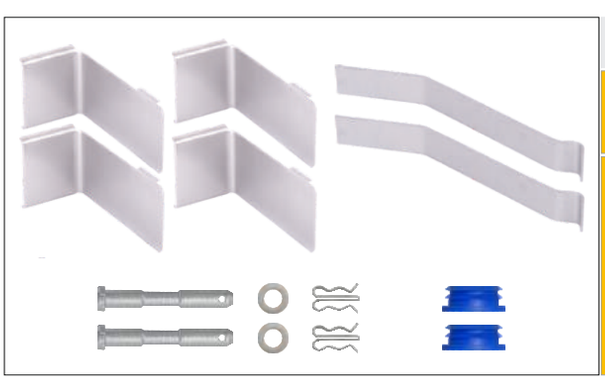

Caliper Pad Retainer Repair Kit	
CHEEFT NUMBER	5021
OEM NUMBER	

B.V

ORIGINAL PART NUMBERS,MARKS AND MODELS MENTIONED ARE ONLY FOR DESCRIPTION PURPOSES.

TSB 3709/4309 9 TON AXLE (WITHOUT PIN) TYPE

CHEEFT NUMBER	5019

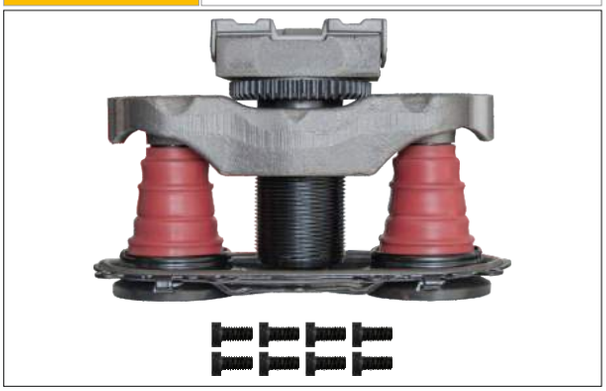

Caliper Mechanism, Piston & Cover Set (9 Ton Axle)

OEM NUMBER	

NR	CHEEFT NR	DESCRIPTIONS	DIMENSION	QTY
1	5004	TAPPET & BOOT REPAIR KIT		1
2	5006	FLAT BEARINGS		1
3	5008	CALIBRATION BOLT		1
4	5009	MECHANISM BEARING HOUSE		1
5	5010	COVER MECHANISM		1
6	5013	BRIDGE ASSEMBLY		1
7	5016	MECHANISM BEARING HOUSE		1
8	5017	MECHANISM HOUSING		1
9	5522	SHAFT ROLLER BEARING		1
10	5523	CALIBRATION BOLT HOUSING		1

B.V

CALIPER REPAIR SET (WITHOUT PIN)

CHEEFT NUMBER	CHS5001

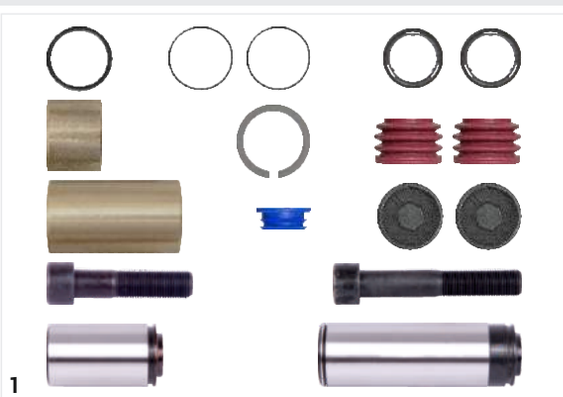

NR	CHEEFT NR	DESCRIPTIONS	QTY
1	5003	GUIDES & SEALS REPAIR KIT	1
2	5005	ROLLER BEARING	1
3	5018	ADJUSTING MECHANISM	1
4	5019	MECHANISM PISTON & COVER KIT	1
5	5022	LEVER REPAIR KIT	1
6	5526	PLUG	2

ORIGINAL PART NUMBERS,MARKS AND MODELS MENTIONED ARE ONLY FOR DESCRIPTION PURPOSES.

CHEEFT®
AIR DISC BRAKE CALIPER REPAIR KITS

B.V

TSB 4312
12 TON AXLE (WITH PIN) TYPE

Always the Best...

EAC CE

COHEEFT®

AIR DISC BRAKE CALIPER REPAIR KITS

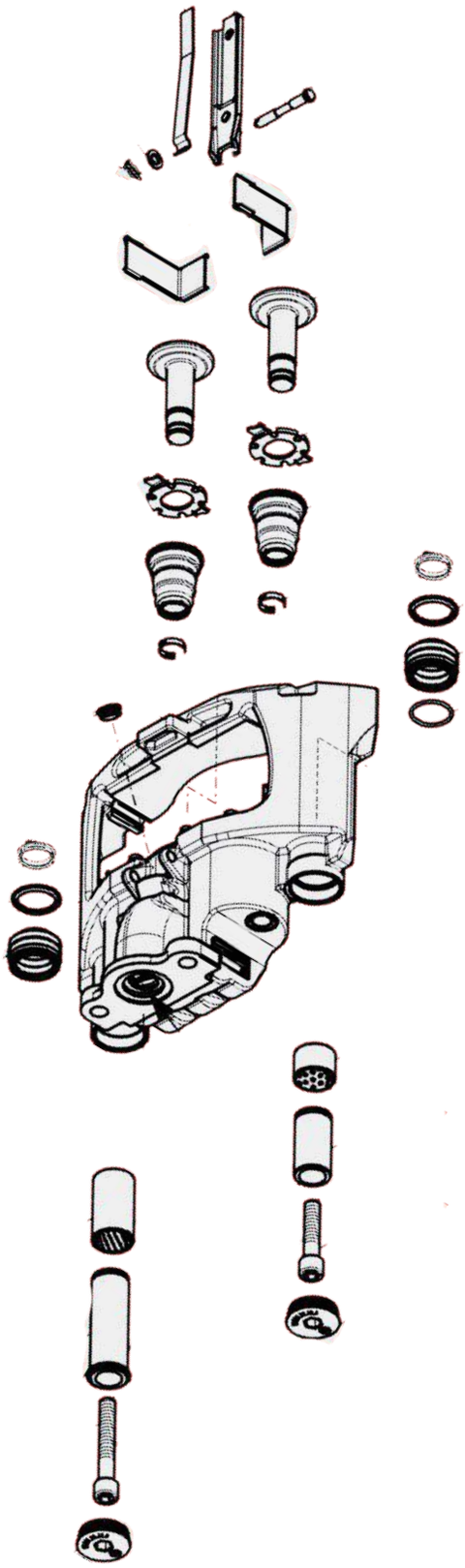

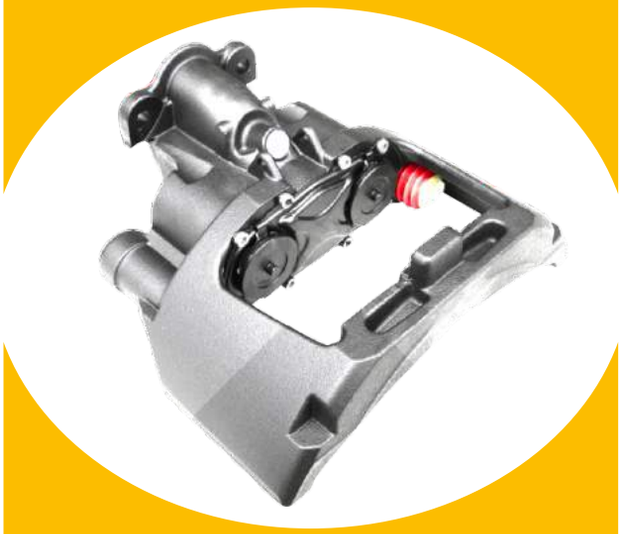

B.V

B.V

TSB 4312
12 TON AXLE (WITH PIN) TYPE

Always the Best...

EAC CE UDEM JAS-ANZ ISO 9001 2015

TSB 4312 12 TON AXLE (WITH PIN) TYPE

B.V

CHEEFT NUMBER	5001

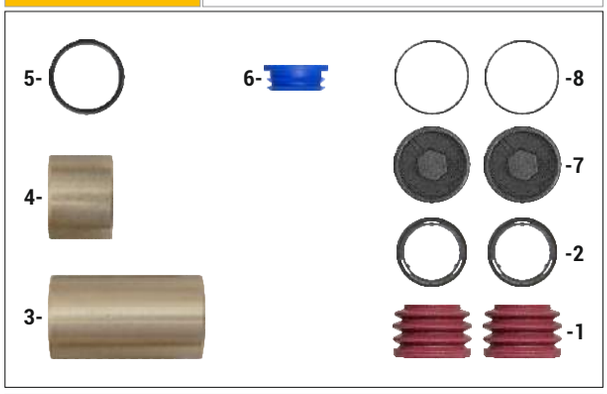

Caliper Seals Repair Kit

OEM NUMBER	B.V 09.801.07.62.0

NR	CHEEFT NR	DESCRIPTIONS	DIMENSION	QTY
1	5505	INNER BOOT		2
2	5506	PLASTIC WASHER		2
3	5507	BRONZE BUSH	Ø41 x Ø37 x 73 mm	1
4	5508	BRONZE BUSH	Ø41 x Ø37 x 30 mm	1
5	5509	O-RING		1
6	5511	PLUG		1
7	5510	PLASTIC CAP		2
8	5545	O-RING		2

CHEEFT NUMBER	5002

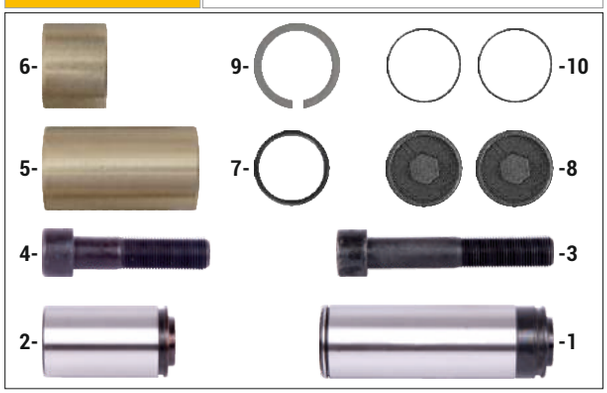

Caliper Guides Repair Kit

OEM NUMBER	B.V 09.801.07.61.0

NR	CHEEFT NR	DESCRIPTIONS	DIMENSION	QTY
1	5501	GUIDE PIN	Ø37 x 123 mm	1
2	5502	GUIDE PIN	Ø36,40 x 70 mm	1
3	5503	BOLT	M16 x 1,5 x 100 mm	1
4	1511	BOLT	M16 x 1,5 x 70 mm	1
5	5507	BRONZE BUSH	Ø41 x Ø37 x 73 mm	1
6	5508	BRONZE BUSH	Ø41 x Ø37 x 30 mm	1
7	5509	O- RING		1
8	5510	PLASTIC CAP		2
9	5518	PIN CIRCLIP	Ø43 x 1,5 mm	1
10	5545	O-RING		2

CHEEFT NUMBER	5003

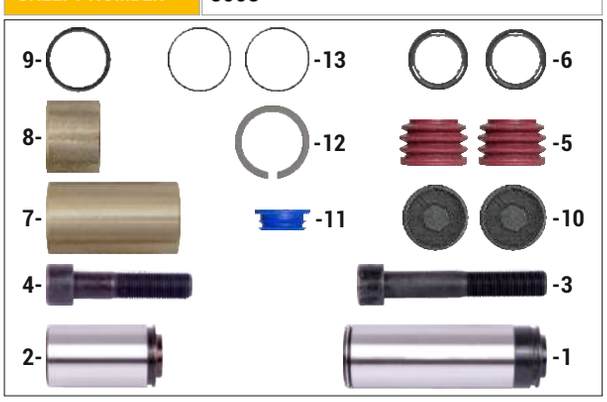

Caliper Guides & Seals Repair Kit

OEM NUMBER	

NR	CHEEFT NR	DESCRIPTIONS	DIMENSION	QTY
1	5501	GUIDE PIN	Ø37 x 123 mm	1
2	5502	GUIDE PIN	Ø36,40 x 70 mm	1
3	5503	BOLT	M16 x 1,5 x 100 mm	1
4	1511	BOLT	M16 x 1,5 x 70 mm	1
5	5505	INNER BOOT		2
6	5506	PLASTIC WASHER		2
7	5507	BRONZE BUSH	Ø41 x Ø37 x 73 mm	1
8	5508	BRONZE BUSH	Ø41 x Ø37 x 30 mm	1
9	5509	O-RING		1
10	5510	PLASTIC CAP		2
11	5511	PLUG		1
12	5518	PIN CIRCLIP	Ø43 x 1,5 mm	1
13	5545	O-RING		2

ORIGINAL PART NUMBERS,MARKS AND MODELS MENTIONED ARE ONLY FOR DESCRIPTION PURPOSES.

TSB 4312 12 TON AXLE (WITH PIN) TYPE

CHEEFT NUMBER	5007

Caliper Tappet & Boot Repair Kit

OEM NUMBER	B.V 09.801.07.63.1 - 05.801.50.90.0

NR	CHEEFT NR	DESCRIPTIONS	DIMENSION	QTY
1	5519	TAPPET (WITH PIN)		2
2	5513	TAPPET BOOT		2
3	5514	LOCKER		2
4	5515	CLAMP		2

CHEEFT NUMBER	5025

Caliper Guides & Pad Retainer Repair Kit

OEM NUMBER	

NR	CHEEFT NR	DESCRIPTIONS	DIMENSION	QTY
1	5501	GUIDE PIN	Ø37 x 123 mm	1
2	5502	GUIDE PIN	Ø36,40 x 70 mm	1
3	5503	BOLT	M16 x 1,5 x 100 mm	1
4	1511	BOLT	M16 x 1,5 x 70 mm	1
5	5506	PLASTIC WASHER		2
6	5024	PAD RETAINER REPAIR KIT		1

CHEEFT NUMBER	5026

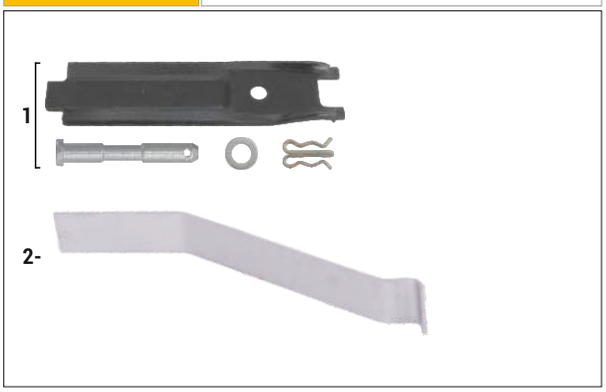

Caliper Pad Retainer Kit

OEM NUMBER	B.V 09.801.07.68.1

NR	CHEEFT NR	DESCRIPTIONS	DIMENSION	QTY
1	5024	PAD RETAINER REPAIR KIT		1
2	5532	PAD SPRING		1

ORIGINAL PART NUMBERS,MARKS AND MODELS MENTIONED ARE ONLY FOR DESCRIPTION PURPOSES.

TSB 4312 12 TON AXLE (WITH PIN) TYPE

B.V

CHEEFT NUMBER	5027

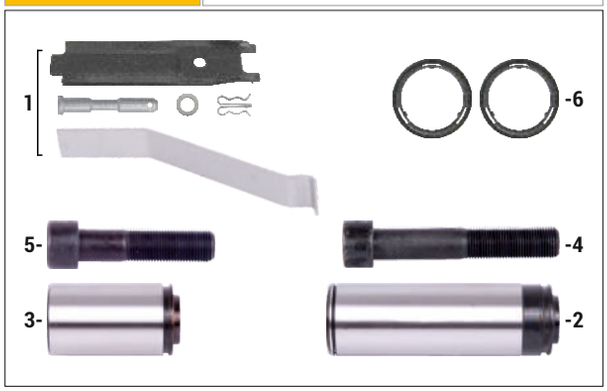

Caliper Guides & Pad Retainer Repair Kit

OEM NUMBER	B.V 09.801.05.81.0

NR	CHEEFT NR	DESCRIPTIONS	DIMENSION	QTY
1	5026	PAD RETAINER REPAIR KIT		1
2	5501	GUIDE PIN	Ø37 x 123 mm	1
3	5502	GUIDE PIN	Ø36,40 x 70 mm	1
4	5503	BOLT	M16 x 1,5 x 100 mm	1
5	1511	BOLT	M16 x 1,5 x 70 mm	1
6	5506	PLASTIC WASHER		2

CHEEFT NUMBER	5010

Caliper Cover Mechanism

OEM NUMBER	B.V 05.010.95.31.0

NR	CHEEFT NR	DESCRIPTIONS	DIMENSION	QTY
1	5520	MECHANISM COVER		1
2	1573	BOLT	M8 x 16 mm	8
3	5521	MECHANISM WASHER		1

CHEEFT NUMBER	5022

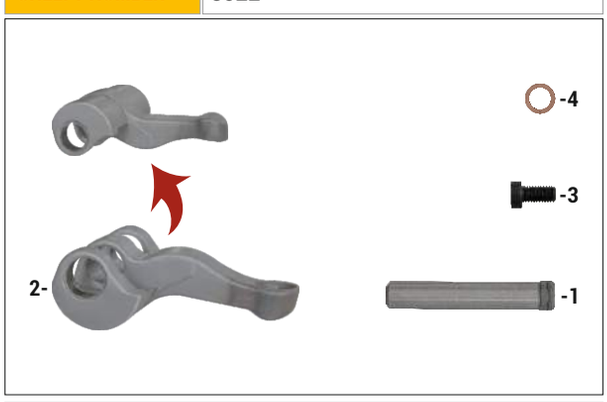

Caliper Lever Repair Kit

OEM NUMBER	

NR	CHEEFT NR	DESCRIPTIONS	DIMENSION	QTY
1	5524	LEVER PIN		1
2	5525	LEVER		1
3	1573	BOLT	M8 x 16 mm	1
4	5527	WASHER		1

ORIGINAL PART NUMBERS,MARKS AND MODELS MENTIONED ARE ONLY FOR DESCRIPTION PURPOSES.

TSB 4312 12 TON AXLE (WITH PIN) TYPE

CHEEFT NUMBER	5011

Caliper Mechanism Washer Kit

OEM NUMBER	

NR	CHEEFT NR	DESCRIPTIONS	DIMENSION	QTY
1	5521	MECHANISM WASHER		10

CHEEFT NUMBER	5012

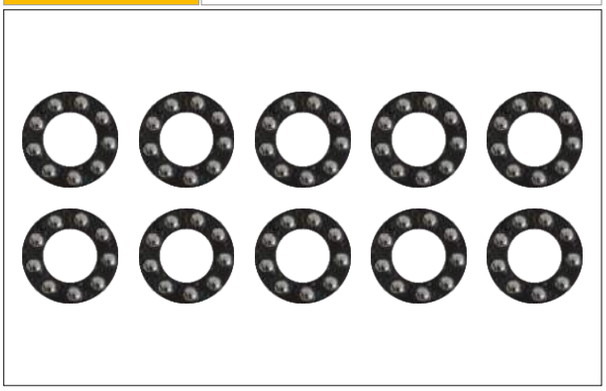

Caliper Shaft Roller Bearing Kit

OEM NUMBER	

NR	CHEEFT NR	DESCRIPTIONS	DIMENSION	QTY
1	5522	SHAFT ROLLER BEARING		10

CHEEFT NUMBER	5014

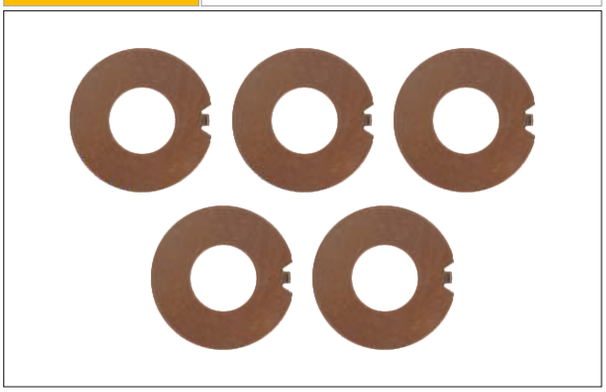

Caliper Calibration Bolt Housing Kit

OEM NUMBER	

NR	CHEEFT NR	DESCRIPTIONS	DIMENSION	QTY
1	5523	CALIBRATION BOLT HOUSING		5

B.V

ORIGINAL PART NUMBERS,MARKS AND MODELS MENTIONED ARE ONLY FOR DESCRIPTION PURPOSES.

TSB 4312 12 TON AXLE (WITH PIN) TYPE

CHEEFT NUMBER	5015

Caliper Plug Kit

OEM NUMBER	

NR	CHEEFT NR	DESCRIPTIONS	DIMENSION	QTY
1	5526	PLUG		5

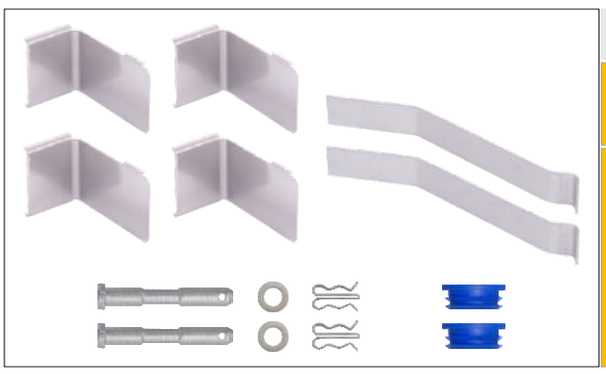

Caliper Pad Retainer Repair Kit

CHEEFT NUMBER	5020
OEM NUMBER	

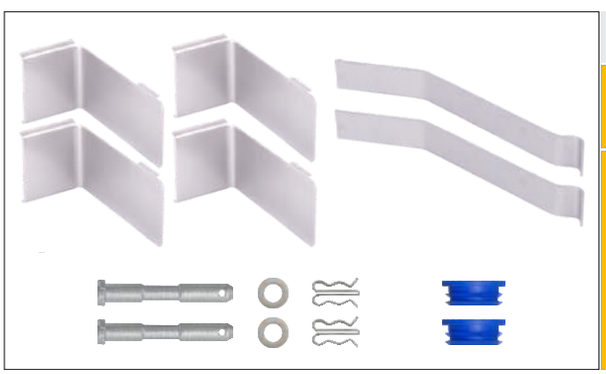

Caliper Pad Retainer Repair Kit

CHEEFT NUMBER	5021
OEM NUMBER	

Caliper Adjusting Mechanism

CHEEFT NUMBER	5018
OEM NUMBER	

B.V

ORIGINAL PART NUMBERS,MARKS AND MODELS MENTIONED ARE ONLY FOR DESCRIPTION PURPOSES.

TSB 4312 12 TON AXLE (WITH PIN) TYPE

Caliper Pad Retainer Repair Kit	
CHEEFT NUMBER	5024
OEM NUMBER	B.V 03.001.00.54.C

Caliper Bridge Assembly	
CHEEFT NUMBER	5013
OEM NUMBER	

Caliper Roller Bearings	
CHEEFT NUMBER	5005
OEM NUMBER	

Caliper Calibration Bolt	
CHEEFT NUMBER	5008
OEM NUMBER	

Caliper Mechanism Bearing House	
CHEEFT NUMBER	5009
OEM NUMBER	

ORIGINAL PART NUMBERS,MARKS AND MODELS MENTIONED ARE ONLY FOR DESCRIPTION PURPOSES.

TSB 4312 12 TON AXLE (WITH PIN) TYPE

Caliper Mechanism Bearing House	
CHEEFT NUMBER	5030
OEM NUMBER	

CHEEFT NUMBER	5029

Caliper Mechanism, Piston & Cover Kit (12 Ton Axle)

OEM NUMBER	

NR	CHEEFT NR	DESCRIPTIONS	DIMENSION	QTY
1	5007	TAPPET & BOOT REPAIR KIT		1
2	5008	CALIBRATION BOLT		1
3	5009	MECHANISM BEARING HOUSE		1
4	5010	COVER MECHANISM		1
5	5013	BRIDGE ASSEMBLY		1
6	5030	MECHANISM BEARING HOUSE		1
7	5522	SHAFT ROLLER BEARING		1
8	5523	CALIBRATION BOLT HOUSING		1

CALIPER REPAIR SET NEW TYPE (WITH PIN)

CHEEFT NUMBER	CHS5004

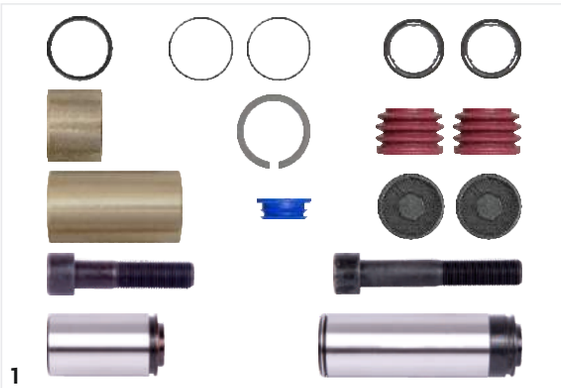

1

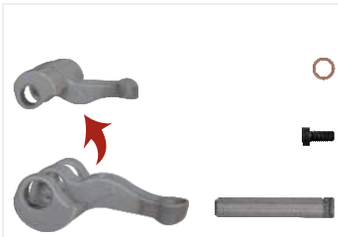

5

4

6

3

2

NR	CHEEFT NR	DESCRIPTIONS	QTY
1	5003	GUIDES & SEALS REPAIR KIT	1
2	5005	ROLLER BEARING	1
3	5018	ADJUSTING MECHANISM	1
4	5029	MECHANISM, PISTON & COVER SET	1
5	5022	LEVER REPAIR KIT	1
6	5526	PLUG	2

ORIGINAL PART NUMBERS,MARKS AND MODELS MENTIONED ARE ONLY FOR DESCRIPTION PURPOSES.

COHEEFT®

AIR DISC BRAKE CALIPER REPAIR KITS

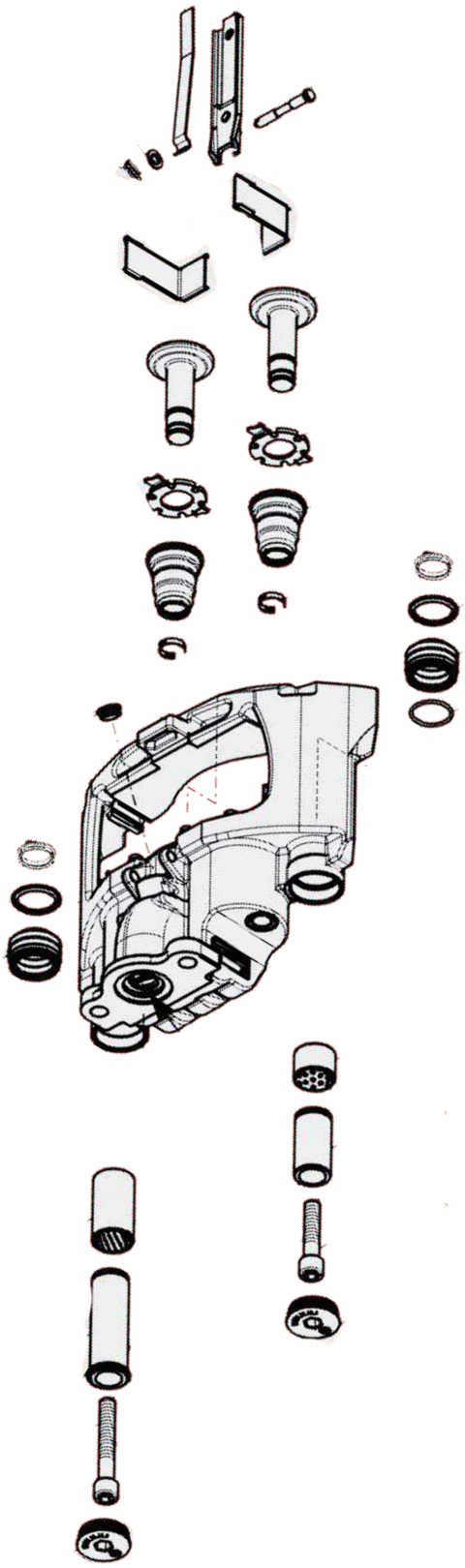

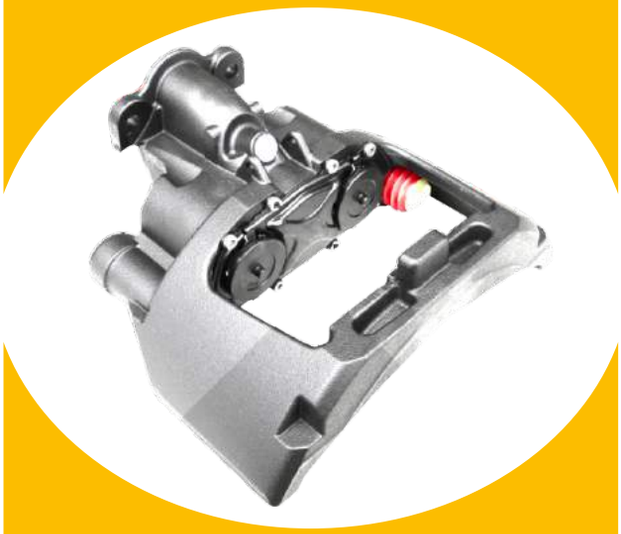

B.V

B.V

TSB 4312
12 TON AXLE (WITHOUT PIN) TYPE

Always the Best...

EAC CE UDEM JAS-ANZ ISO 9001 2015

TSB 4312 12 TON AXLE (WITHOUT PIN) TYPE

CHEEFT NUMBER	5001

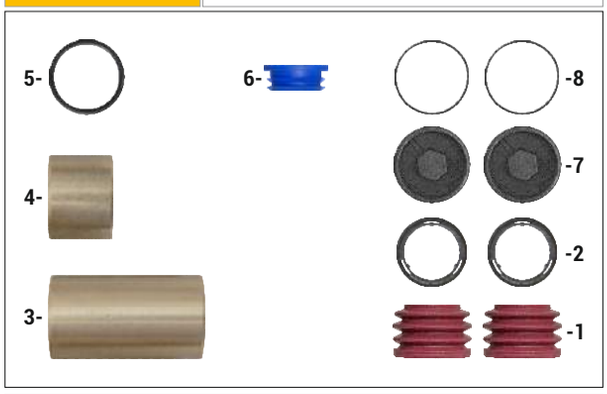

Caliper Seals Repair Kit

OEM NUMBER	B.V 09.801.07.62.0

NR	CHEEFT NR	DESCRIPTIONS	DIMENSION	QTY
1	5505	INNER BOOT		2
2	5506	PLASTIC WASHER		2
3	5507	BRONZE BUSH	Ø41 x Ø37 x 73 mm	1
4	5508	BRONZE BUSH	Ø41 x Ø37 x 30 mm	1
5	5509	O-RING		1
6	5511	PLUG		1
7	5510	PLASTIC CAP		2
8	5545	O-RING		2

B.V

CHEEFT NUMBER	5002

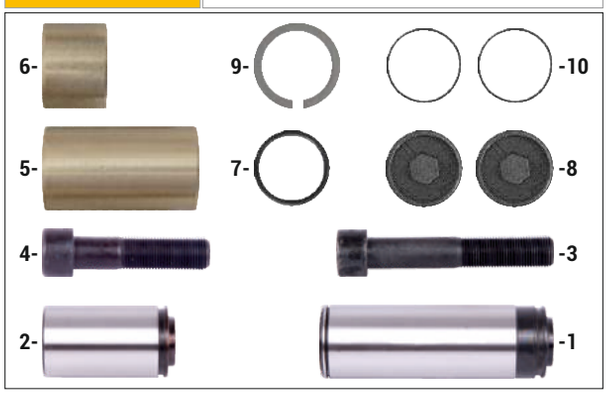

Caliper Guides Repair Kit

OEM NUMBER	B.V 09.801.07.61.0

NR	CHEEFT NR	DESCRIPTIONS	DIMENSION	QTY
1	5501	GUIDE PIN	Ø37 x 123 mm	1
2	5502	GUIDE PIN	Ø36,40 x 70 mm	1
3	5503	BOLT	M16 x 1,5 x 100 mm	1
4	1511	BOLT	M16 x 1,5 x 70 mm	1
5	5507	BRONZE BUSH	Ø41 x Ø37 x 73 mm	1
6	5508	BRONZE BUSH	Ø41 x Ø37 x 30 mm	1
7	5509	O- RING		1
8	5510	PLASTIC CAP		2
9	5518	PIN CIRCLIP	Ø43 x 1,5 mm	1
10	5545	O-RING		2

CHEEFT NUMBER	5003

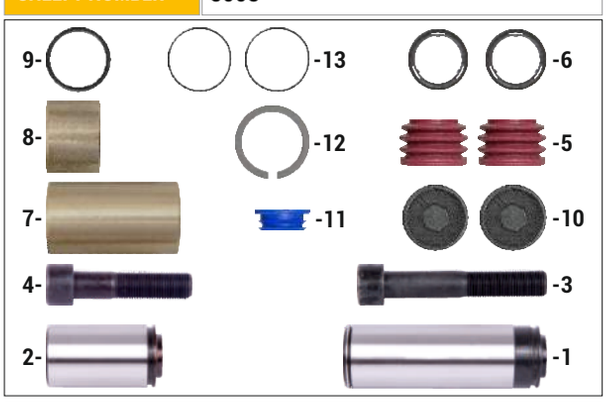

Caliper Guides & Seals Repair Kit

OEM NUMBER	

NR	CHEEFT NR	DESCRIPTIONS	DIMENSION	QTY
1	5501	GUIDE PIN	Ø37 x 123 mm	1
2	5502	GUIDE PIN	Ø36,40 x 70 mm	1
3	5503	BOLT	M16 x 1,5 x 100 mm	1
4	1511	BOLT	M16 x 1,5 x 70 mm	1
5	5505	INNER BOOT		2
6	5506	PLASTIC WASHER		2
7	5507	BRONZE BUSH	Ø41 x Ø37 x 73 mm	1
8	5508	BRONZE BUSH	Ø41 x Ø37 x 30 mm	1
9	5509	O-RING		1
10	5510	PLASTIC CAP		2
11	5511	PLUG		1
12	5518	PIN CIRCLIP	Ø43 x 1,5 mm	1
13	5545	O-RING		2

ORIGINAL PART NUMBERS,MARKS AND MODELS MENTIONED ARE ONLY FOR DESCRIPTION PURPOSES.

TSB 4312 12 TON AXLE (WITHOUT PIN) TYPE

CHEEFT NUMBER	5004

Caliper Tappet & Boot Repair Kit

OEM NUMBER	B.V 09.801.07.63.0

NR	CHEEFT NR	DESCRIPTIONS	DIMENSION	QTY
1	5512	TAPPET		2
2	5513	TAPPET BOOT		2
3	5514	LOCKER		2
4	5515	CLAMP		2

CHEEFT NUMBER	5025

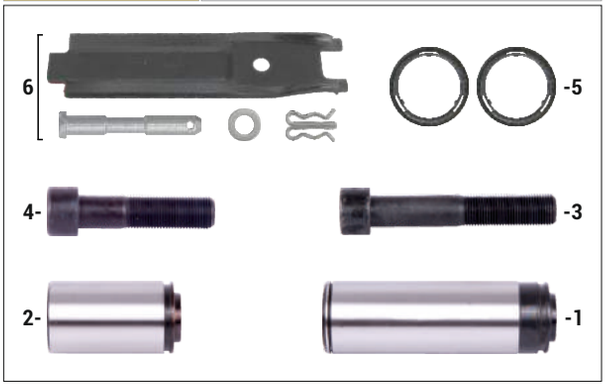

Caliper Guides & Pad Retainer Repair Kit

OEM NUMBER	

NR	CHEEFT NR	DESCRIPTIONS	DIMENSION	QTY
1	5501	GUIDE PIN	Ø37 x 123 mm	1
2	5502	GUIDE PIN	Ø36,40 x 70 mm	1
3	5503	BOLT	M16 x 1,5 x 100 mm	1
4	1511	BOLT	M16 x 1,5 x 70 mm	1
5	5506	PLASTIC WASHER		2
6	5024	PAD RETAINER REPAIR KIT		1

CHEEFT NUMBER	5026

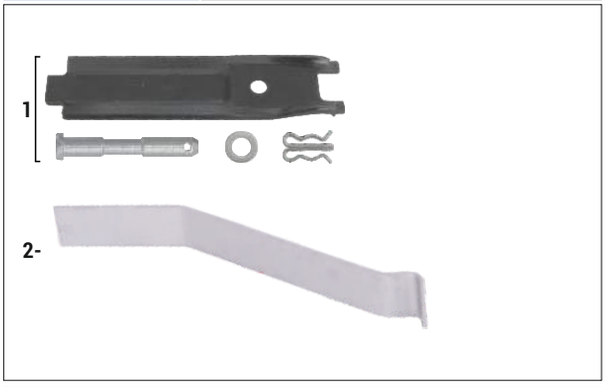

Caliper Pad Retainer Kit

OEM NUMBER	B.V 09.801.07.68.1

NR	CHEEFT NR	DESCRIPTIONS	DIMENSION	QTY
1	5024	PAD RETAINER REPAIR KIT		1
2	5532	PAD SPRING		1

ORIGINAL PART NUMBERS,MARKS AND MODELS MENTIONED ARE ONLY FOR DESCRIPTION PURPOSES.

TSB 4312 12 TON AXLE (WITHOUT PIN) TYPE

CHEEFT NUMBER	5027

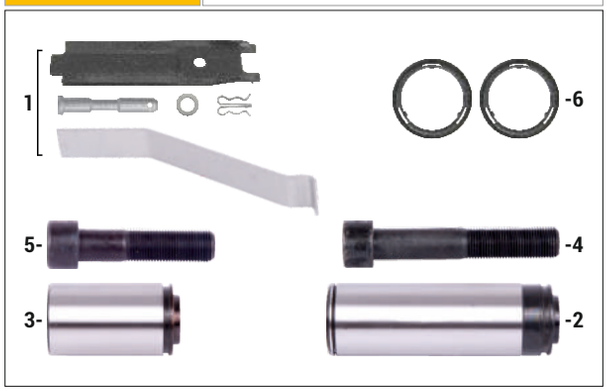

Caliper Guides & Pad Retainer Repair Kit

OEM NUMBER	B.V 09.801.05.81.0

NR	CHEEFT NR	DESCRIPTIONS	DIMENSION	QTY
1	5026	PAD RETAINER REPAIR KIT		1
2	5501	GUIDE PIN	Ø37 x 123 mm	1
3	5502	GUIDE PIN	Ø36,40 x 70 mm	1
4	5503	BOLT	M16 x 1,5 x 100 mm	1
5	1511	BOLT	M16 x 1,5 x 70 mm	1
6	5506	PLASTIC WASHER		2

B.V

CHEEFT NUMBER	5010

Caliper Cover Mechanism

OEM NUMBER	B.V 05.010.95.31.0

NR	CHEEFT NR	DESCRIPTIONS	DIMENSION	QTY
1	5520	MECHANISM COVER		1
2	1573	BOLT	M8 x 16 mm	8
3	5521	MECHANISM WASHER		1

CHEEFT NUMBER	5022

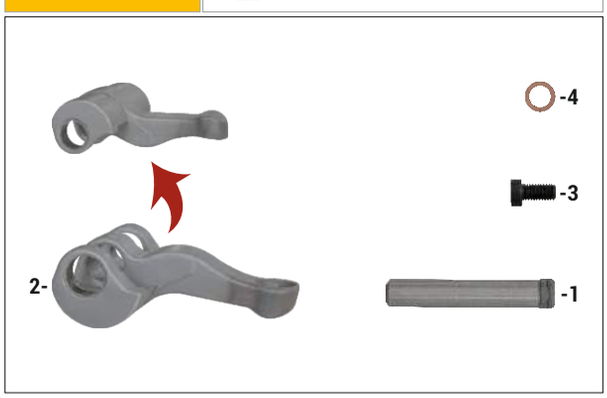

Caliper Lever Repair Kit

OEM NUMBER	

NR	CHEEFT NR	DESCRIPTIONS	DIMENSION	QTY
1	5524	LEVER PIN		1
2	5525	LEVER		1
3	1573	BOLT	M8 x 16 mm	1
4	5527	WASHER		1

ORIGINAL PART NUMBERS,MARKS AND MODELS MENTIONED ARE ONLY FOR DESCRIPTION PURPOSES.

TSB 4312 12 TON AXLE (WITHOUT PIN) TYPE

CHEEFT NUMBER	5011

Caliper Mechanism Washer Kit

OEM NUMBER	

NR	CHEEFT NR	DESCRIPTIONS	DIMENSION	QTY
1	5521	MECHANISM WASHER		10

CHEEFT NUMBER	5012

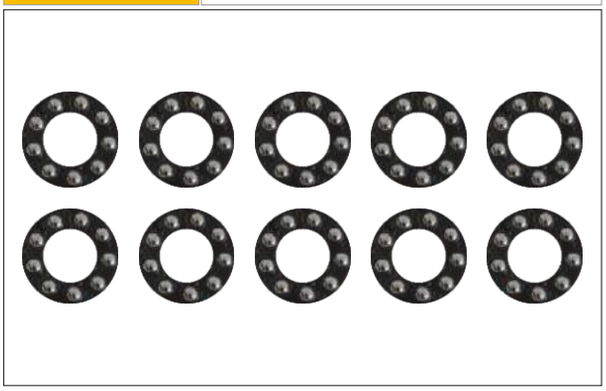

Caliper Shaft Roller Bearing Kit

OEM NUMBER	

NR	CHEEFT NR	DESCRIPTIONS	DIMENSION	QTY
1	5522	SHAFT ROLLER BEARING		10

CHEEFT NUMBER	5014

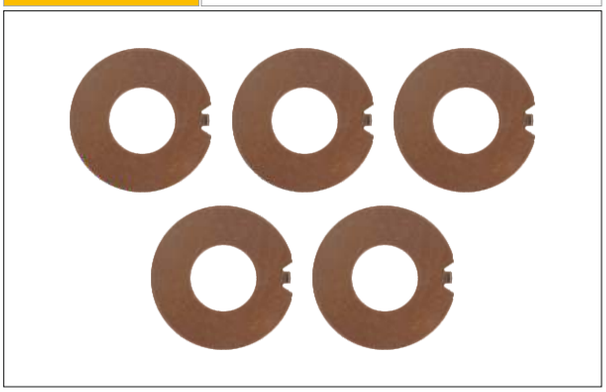

Caliper Calibration Bolt Housing Kit

OEM NUMBER	

NR	CHEEFT NR	DESCRIPTIONS	DIMENSION	QTY
1	5523	CALIBRATION BOLT HOUSING		5

ORIGINAL PART NUMBERS,MARKS AND MODELS MENTIONED ARE ONLY FOR DESCRIPTION PURPOSES.

TSB 4312 12 TON AXLE (WITHOUT PIN) TYPE

CHEEFT NUMBER	5015

Caliper Plug Kit

OEM NUMBER	

NR	CHEEFT NR	DESCRIPTIONS	DIMENSION	QTY
1	5526	PLUG		5

B.V

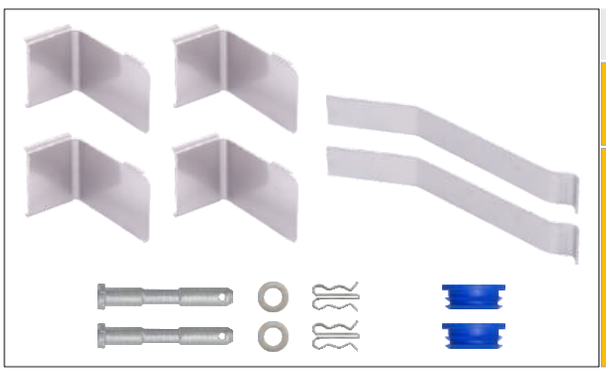

Caliper Pad Retainer Repair Kit

CHEEFT NUMBER	5020
OEM NUMBER	

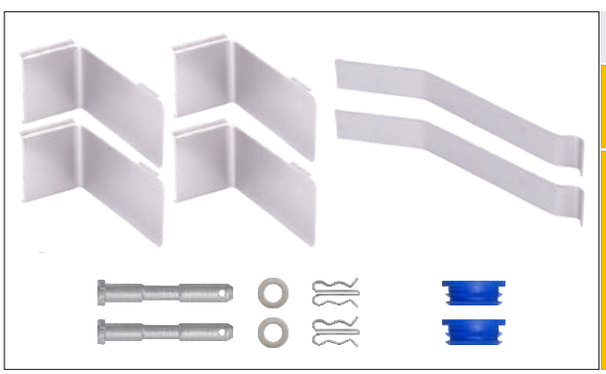

Caliper Pad Retainer Repair Kit

CHEEFT NUMBER	5021
OEM NUMBER	

Caliper Adjusting Mechanism

CHEEFT NUMBER	5018
OEM NUMBER	

ORIGINAL PART NUMBERS,MARKS AND MODELS MENTIONED ARE ONLY FOR DESCRIPTION PURPOSES.

TSB 4312 12 TON AXLE (WITHOUT PIN) TYPE

Caliper Pad Retainer Repair Kit	
CHEEFT NUMBER	5024
OEM NUMBER	B.V 03.001.00.54.C

Caliper Bridge Assembly	
CHEEFT NUMBER	5013
OEM NUMBER	

Caliper Roller Bearings	
CHEEFT NUMBER	5005
OEM NUMBER	

Caliper Calibration Bolt	
CHEEFT NUMBER	5008
OEM NUMBER	

Caliper Mechanism Bearing House	
CHEEFT NUMBER	5009
OEM NUMBER	

ORIGINAL PART NUMBERS,MARKS AND MODELS MENTIONED ARE ONLY FOR DESCRIPTION PURPOSES.

TSB 4312 12 TON AXLE (WITHOUT PIN) TYPE

Caliper Mechanism Bearing House	
CHEEFT NUMBER	5030
OEM NUMBER	

CHEEFT NUMBER	5028

Caliper Mechanism, Piston & Cover Set (12 Ton Axle)

OEM NUMBER	

NR	CHEEFT NR	DESCRIPTIONS	DIMENSION	QTY
1	5004	TAPPET & BOOT REPAIR KIT		1
2	5008	CALIBRATION BOLT		1
3	5009	MECHANISM BEARING HOUSE		1
4	5010	COVER MECHANISM		1
5	5013	BRIDGE ASSEMBLY		1
6	5030	MECHANISM BEARING HOUSE		1
7	5522	SHAFT ROLLER BEARING		1
8	5523	CALIBRATION BOLT HOUSING		1

CALIPER REPAIR SET NEW TYPE (WITHOUT PIN)

CHEEFT NUMBER	CHS5003

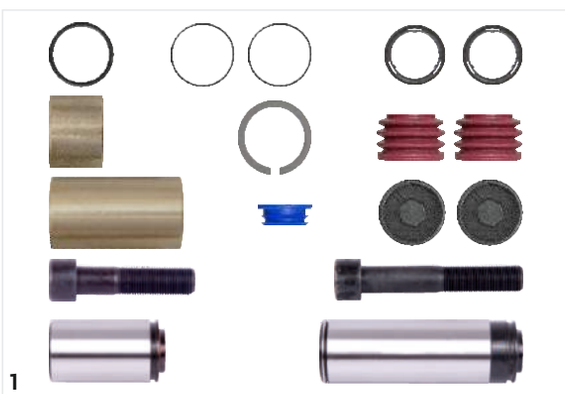

NR	CHEEFT NR	DESCRIPTIONS	QTY
1	5003	GUIDES & SEALS REPAIR KIT	1
2	5005	ROLLER BEARING	1
3	5018	ADJUSTING MECHANISM	1
4	5028	MECHANISM PISTON & COVER SET	1
5	5022	LEVER REPAIR KIT	1
6	5526	PLUG	2

ORIGINAL PART NUMBERS,MARKS AND MODELS MENTIONED ARE ONLY FOR DESCRIPTION PURPOSES.

COHEEFT®

AIR DISC BRAKE CALIPER REPAIR KITS

B.V

B.V

SETS

Always the Best...

EAC CE UDEM JAS-ANZ ISO 9001 2015

SETS

CALIPER REPAIR SET (WITHOUT PIN)

CHEEFT NUMBER	CHS5001

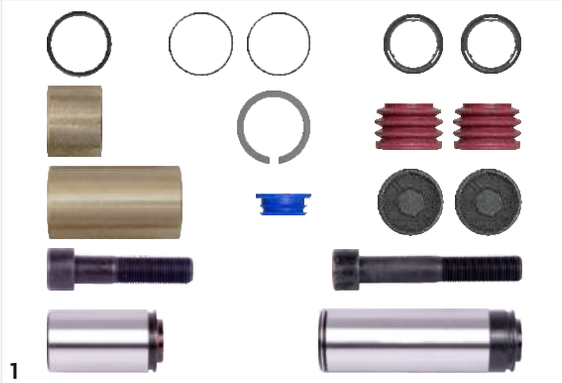

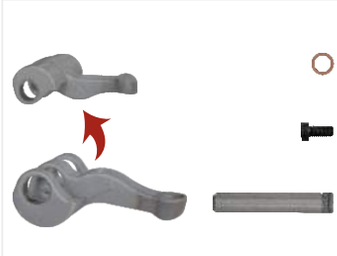

NR	CHEEFT NR	DESCRIPTIONS	QTY
1	5003	GUIDES & SEALS REPAIR KIT	1
2	5005	ROLLER BEARING	1
3	5018	ADJUSTING MECHANISM	1
4	5019	MECHANISM PISTON & COVER KIT	1
5	5022	LEVER REPAIR KIT	1
6	5526	PLUG	2

B.V

CALIPER REPAIR SET (WITH PIN)

CHEEFT NUMBER	CHS5002

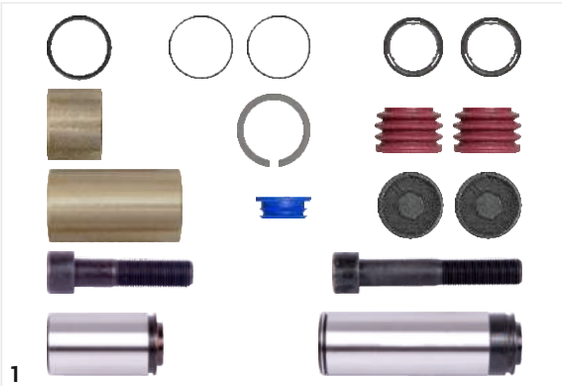

NR	CHEEFT NR	DESCRIPTIONS	QTY
1	5003	GUIDES & SEALS REPAIR KIT	1
2	5005	ROLLER BEARING	1
3	5018	ADJUSTING MECHANISM	1
4	5023	MECHANISM, PISTON & COVER KIT	1
5	5022	LEVER REPAIR KIT	1
6	5526	PLUG	2

ORIGINAL PART NUMBERS,MARKS AND MODELS MENTIONED ARE ONLY FOR DESCRIPTION PURPOSES.

SETS

CALIPER REPAIR SET NEW TYPE (WITHOUT PIN)

CHEEFT NUMBER: CHS5003

NR	CHEEFT NR	DESCRIPTIONS	QTY
1	5003	GUIDES & SEALS REPAIR KIT	1
2	5005	ROLLER BEARING	1
3	5018	ADJUSTING MECHANISM	1
4	5028	MECHANISM PISTON & COVER SET	1
5	5022	LEVER REPAIR KIT	1
6	5526	PLUG	2

CALIPER REPAIR SET NEW TYPE (WITH PIN)

CHEEFT NUMBER: CHS5004

NR	CHEEFT NR	DESCRIPTIONS	QTY
1	5003	GUIDES & SEALS REPAIR KIT	1
2	5005	ROLLER BEARING	1
3	5018	ADJUSTING MECHANISM	1
4	5029	MECHANISM, PISTON & COVER SET	1
5	5022	LEVER REPAIR KIT	1
6	5526	PLUG	2

ORIGINAL PART NUMBERS,MARKS AND MODELS MENTIONED ARE ONLY FOR DESCRIPTION PURPOSES.

SF

COHEEFT®
AIR DISC BRAKE CALIPER REPAIR KITS

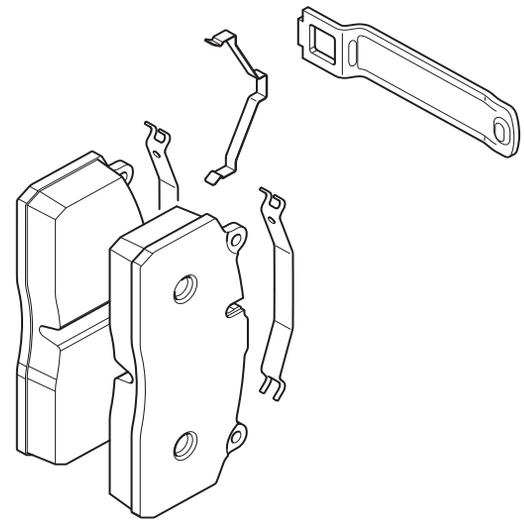

SF

SBS 2220 (MODUL T-HDX) TYPE

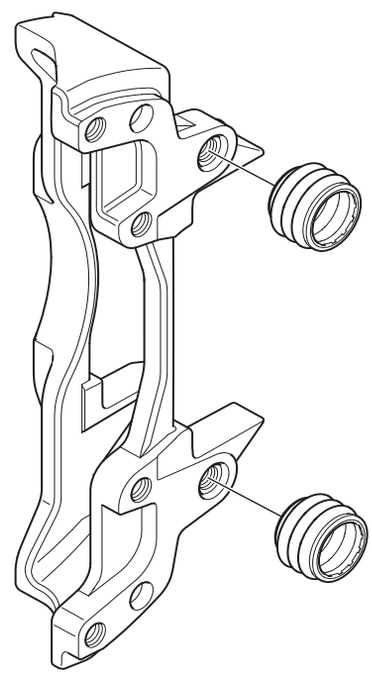

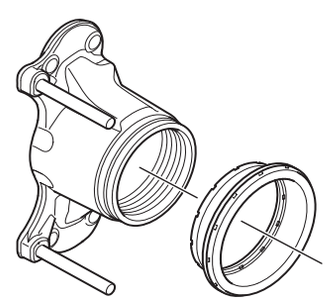

Always the Best...

COHEEFT®

AIR DISC BRAKE CALIPER REPAIR KITS

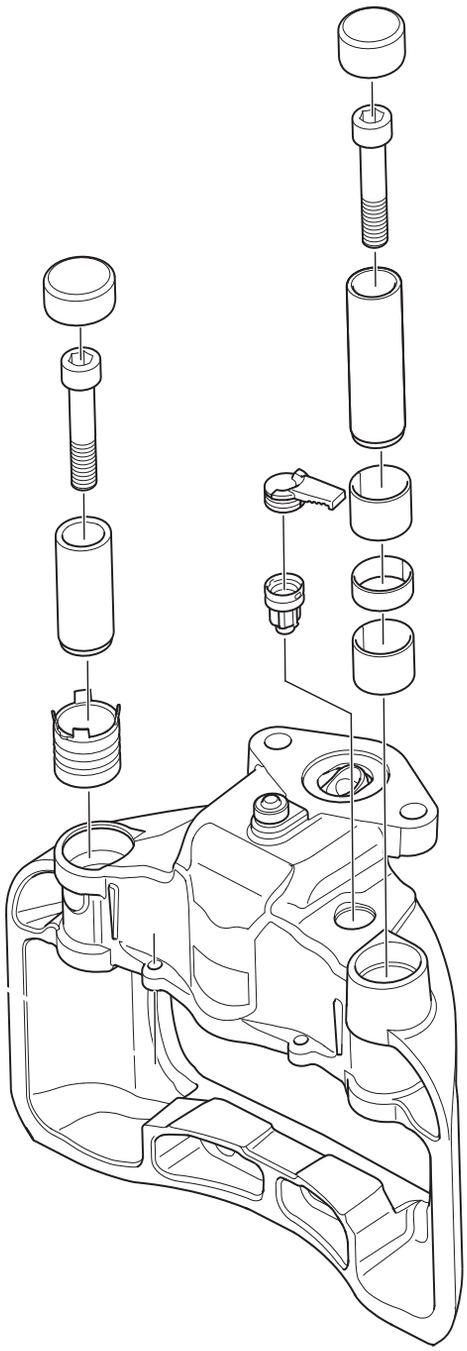

SF

SF

SBS 2220 (MODUL T-HDX) TYPE

Always the Best...

EAC CE UDEM JAS-ANZ ISO 9001 2015

SBS 2220 (MODUL T-HDX) TYPE

CHEEFT NUMBER	6017

Caliper Mechanism Set

OEM NUMBER	

NR	CHEEFT NR	DESCRIPTIONS	DIMENSION	QTY
1	6005	CALIBRATION BOLT		1
2	6008	MECHANISM		1
3	6009	MECHANISM BEARING HOUSE		1
4	6012	MECHANISM BEARING REPAIR KIT		1
5	6013	MECHANISM PLATE		1
6	6015	BEARING		1
7	6016	BEARING REPAIR KIT		1
8	6018	LEVER		1
9	6510	ADJUSTER BOLT GAITER		1
10	6521	MECHANISM LOCKING PLASTIC		1
11	6522	MECHANISM BEARING HOUSE		2

CHEEFT NUMBER	6001

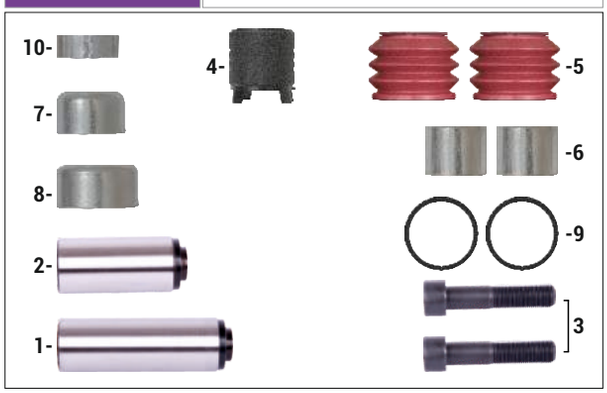

Caliper Guides & Seals Repair Kit

OEM NUMBER	SF 3 434 3861 00 - HDX 95397

NR	CHEEFT NR	DESCRIPTIONS	DIMENSION	QTY
1	6501	GUIDE PIN	Ø35 x 118,70 mm	1
2	6502	GUIDE PIN	Ø35,5 x 87 mm	1
3	1513	BOLT	M16 x 1,5 x 80 mm	2
4	6503	PLASTIC OVAL BUSH		1
5	6504	INNER BOOT		2
6	6505	BUSH	Ø39 x Ø35 x 30 mm	2
7	6506	STEEL CAP	Ø42 x 25 mm	1
8	6507	STEEL CAP	Ø45 x 22,5 mm	1
9	6508	WASHER		2
10	6513	BUSH RETAINER	Ø39,5 x Ø36 x 14,5 mm	1

CHEEFT NUMBER	6016

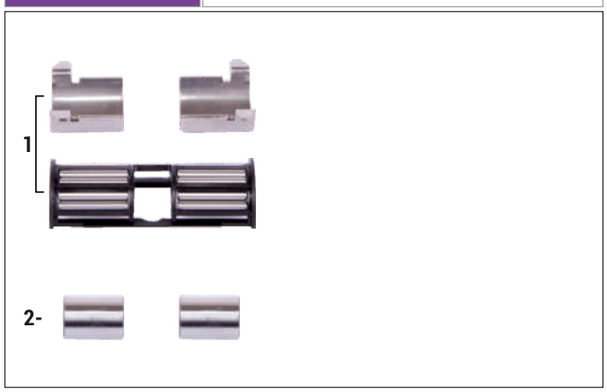

Caliper Bearing Repair Kit

OEM NUMBER	

NR	CHEEFT NR	DESCRIPTIONS	DIMENSION	QTY
1	6014	CALIPER BEARINGS		1
2	6523	ROLLER BEARING		2

SF

ORIGINAL PART NUMBERS,MARKS AND MODELS MENTIONED ARE ONLY FOR DESCRIPTION PURPOSES.

SBS 2220 (MODUL T-HDX) TYPE

CHEEFT NUMBER	6012

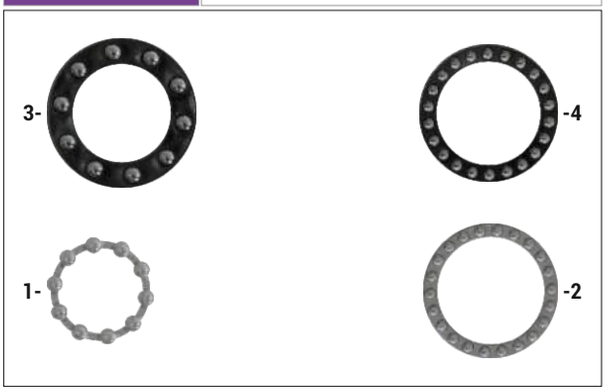

Caliper Mechanism Bearing Repair Kit

OEM NUMBER	

NR	CHEEFT NR	DESCRIPTIONS	DIMENSION	QTY
1	6516	BALL BEARING		1
2	6517	BALL BEARING		1
3	6518	BALL BEARING		1
4	6519	BALL BEARING		1

CHEEFT NUMBER	6011

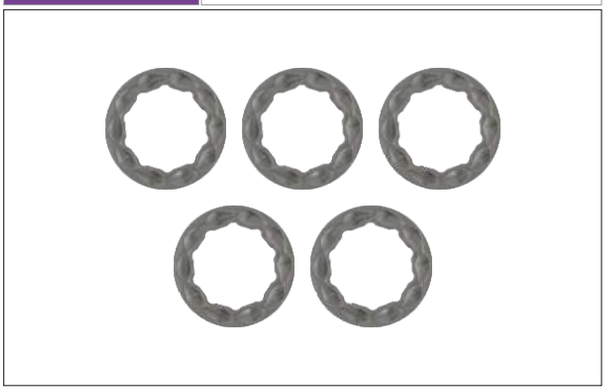

Caliper Mechanism Bearing House Kit

OEM NUMBER	

NR	CHEEFT NR	DESCRIPTIONS	DIMENSION	QTY
1	6522	MECHANISM BEARING HOUSE		5

CHEEFT NUMBER	5011

Caliper Mechanism Washer Kit

OEM NUMBER	

NR	CHEEFT NR	DESCRIPTIONS	DIMENSION	QTY
1	5521	MECHANISM WASHER		10

ORIGINAL PART NUMBERS,MARKS AND MODELS MENTIONED ARE ONLY FOR DESCRIPTION PURPOSES.

SBS 2220 (MODUL T-HDX) TYPE

SF

CHEEFT NUMBER	6003

Caliper Adjuster Bolt Gaiter Kit

OEM NUMBER	

NR	CHEEFT NR	DESCRIPTIONS	DIMENSION	QTY
1	6510	ADJUSTER BOLT GAITER		5

CHEEFT NUMBER	6020

Caliper Adjuster Bolt Gaiter & Plastic Cap Kit

OEM NUMBER	SF 3 434 3863 00 - HDX 95399

NR	CHEEFT NR	DESCRIPTIONS	DIMENSION	QTY
1	6510	ADJUSTER BOLT GAITER		1
2	6520	CALIPER PLASTIC CAP		1

CHEEFT NUMBER	6021

Caliper Adjuster Bolt Gaiter & Plastic Cap Kit

OEM NUMBER	SF 3 434 3862 00 - HDX 95398

NR	CHEEFT NR	DESCRIPTIONS	DIMENSION	QTY
1	6520	PLASTIC CAP		1
2	6512	ADJUSTER GEAR PLASTIC		1
3	6515	SEAL		1

ORIGINAL PART NUMBERS,MARKS AND MODELS MENTIONED ARE ONLY FOR DESCRIPTION PURPOSES.

SBS 2220 (MODUL T-HDX) TYPE

CHEEFT NUMBER	6026

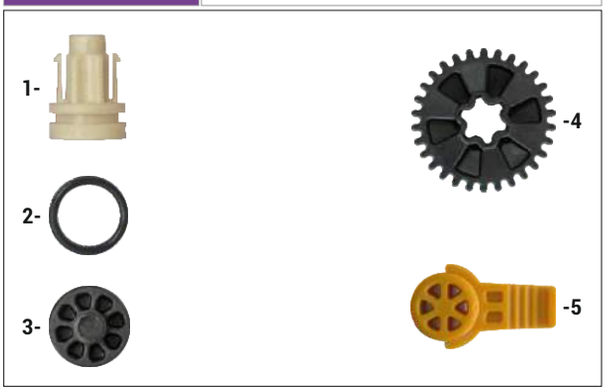

Caliper Plastic Cap Kit

OEM NUMBER	

NR	CHEEFT NR	DESCRIPTIONS	DIMENSION	QTY
1	6512	ADJUSTER GEAR PLASTIC		1
2	6515	SEAL		1
3	6514	PLASTIC CAP		1
4	6511	PLASTIC ADJUSTER GEAR		1
5	6520	PLASTIC CAP		1

CHEEFT NUMBER	6002

Caliper Adjuster Gear Plastic Kit

OEM NUMBER	

NR	CHEEFT NR	DESCRIPTIONS	DIMENSION	QTY
1	6512	ADJUSTER GEAR PLASTIC		5
2	6515	SEAL		5

CHEEFT NUMBER	6007

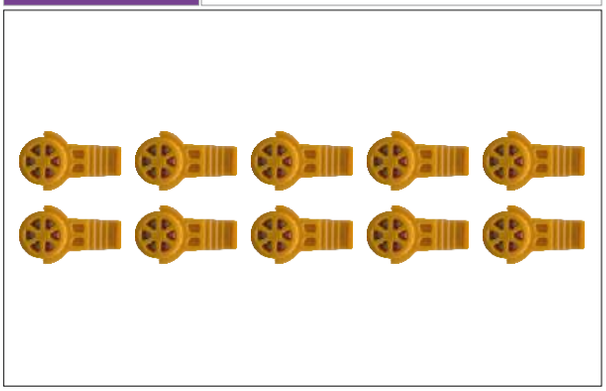

Caliper Plastic Cap Kit

OEM NUMBER	

NR	CHEEFT NR	DESCRIPTIONS	DIMENSION	QTY
1	6520	PLASTIC CAP		10

ORIGINAL PART NUMBERS,MARKS AND MODELS MENTIONED ARE ONLY FOR DESCRIPTION PURPOSES.

SBS 2220 (MODUL T-HDX) TYPE

CHEEFT NUMBER	6019

Caliper Pad Retainer Repair Kit

OEM NUMBER	

NR	CHEEFT NR	DESCRIPTIONS	DIMENSION	QTY
1	6525	CALIPER PAD RETAINER		1
2	6524	PAD SPRING		1

CHEEFT NUMBER	6004

Caliper Plastic Adjuster Gear Kit

OEM NUMBER	HDX 94700

NR	CHEEFT NR	DESCRIPTIONS	DIMENSION	QTY
1	6511	PLASTIC ADJUSTER GEAR		5

CHEEFT NUMBER	6006

Caliper Plastic Cap Kit

OEM NUMBER	

NR	CHEEFT NR	DESCRIPTIONS	DIMENSION	QTY
1	6514	PLASTIC CAP		10

SF

ORIGINAL PART NUMBERS,MARKS AND MODELS MENTIONED ARE ONLY FOR DESCRIPTION PURPOSES.

SBS 2220 (MODUL T-HDX) TYPE

CHEEFT NUMBER	6025

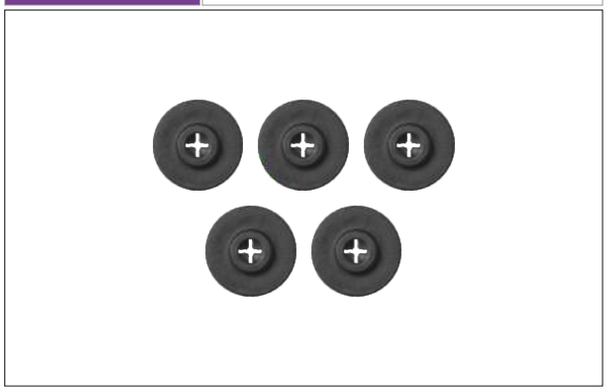

Caliper Mechanism Protection Cap Kit

OEM NUMBER	

NR	CHEEFT NR	DESCRIPTIONS	DIMENSION	QTY
1	6535	MECHANISM PROTECTION CAP		5

CHEEFT NUMBER	6010

Caliper Mechanism Locking Plastic Kit

OEM NUMBER	HDX 95535

NR	CHEEFT NR	DESCRIPTIONS	DIMENSION	QTY
1	6521	MECHANISM LOCKING PLASTIC		5

ORIGINAL PART NUMBERS,MARKS AND MODELS MENTIONED ARE ONLY FOR DESCRIPTION PURPOSES.

SBS 2220 (MODUL T-HDX) TYPE

Caliper Mechanism	
CHEEFT NUMBER	6008
OEM NUMBER	

Caliper Mechanism Bearing House	
CHEEFT NUMBER	6009
OEM NUMBER	

Caliper Mechanism Plate	
CHEEFT NUMBER	6013
OEM NUMBER	

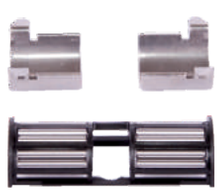

Caliper Bearings	
CHEEFT NUMBER	6014
OEM NUMBER	

Caliper Bearings	
CHEEFT NUMBER	6015
OEM NUMBER	

SF

ORIGINAL PART NUMBERS,MARKS AND MODELS MENTIONED ARE ONLY FOR DESCRIPTION PURPOSES.

SBS 2220 (MODUL T-HDX) TYPE

Caliper Calibration Bolt

CHEEFT NUMBER	6005
OEM NUMBER	

Caliper Lever

CHEEFT NUMBER	6018
OEM NUMBER	

Mechanism Fixing Kit

CHEEFT NUMBER	6023
OEM NUMBER	

SF Set Nut Spanner

CHEEFT NUMBER	6024
OEM NUMBER	

SF Modul T 22,5 Inch Caliper Carrier (Right-Left)

CHEEFT NUMBER	6022
OEM NUMBER	MODUL T SF Trailer Axle

SF

ORIGINAL PART NUMBERS,MARKS AND MODELS MENTIONED ARE ONLY FOR DESCRIPTION PURPOSES.

COHEEFT®
AIR DISC BRAKE CALIPER REPAIR KITS

SF

SETS

Always the Best...

COHEEFT®

AIR DISC BRAKE CALIPER REPAIR KITS

SF

SETS

SF

Always the Best...

EAC CE

UDEM JAS-ANZ ISO 9001 2015

SETS

CALIPER REPAIR SET	CHEEFT NUMBER	CHS6001

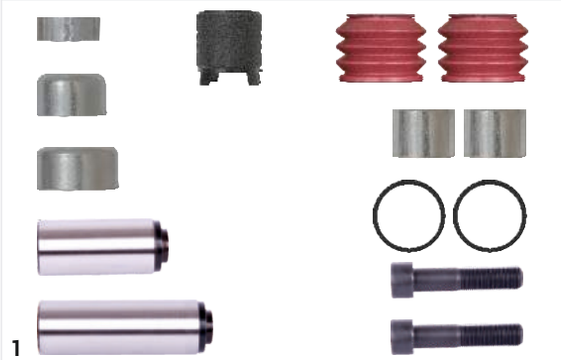
1

2

3

4

5

7

6

NR	CHEEFT NR	DESCRIPTIONS	QTY
1	6001	GUIDES & SEALS REPAIR KIT	1
2	6017	MECHANISM SET	1
3	6511	PLASTIC ADJUSTER GEAR	1
4	6512	ADJUSTER GEAR PLASTIC	1
5	6514	PLASTIC CAP	1
6	6515	SEAL	1
7	6520	PLASTIC CAP	1

ORIGINAL PART NUMBERS,MARKS AND MODELS MENTIONED ARE ONLY FOR DESCRIPTION PURPOSES.

COHEEFT®

AIR DISC BRAKE CALIPER REPAIR KITS

HYDRAULIC CALIPER

HYDRAULIC CALIPER

BRMB / MRT HYDRAULIC BSCH

Always the Best...

EAC CE UDEM JAS-ANZ ISO 9001 2015

BRMB / MRT HYDRAULIC

CHEEFT NUMBER	7001

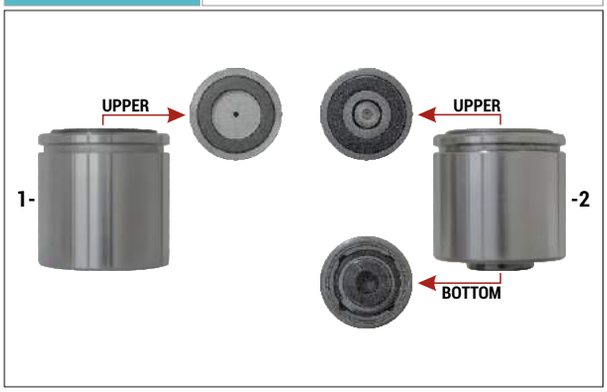

Caliper Piston Kit

OEM NUMBER	

NR	CHEEFT NR	DESCRIPTIONS	DIMENSION	QTY
1	7847	PISTON	Ø68 x 63,60 mm	1
2	7848	PISTON	Ø68 x 63,60 mm	1

CHEEFT NUMBER	7002

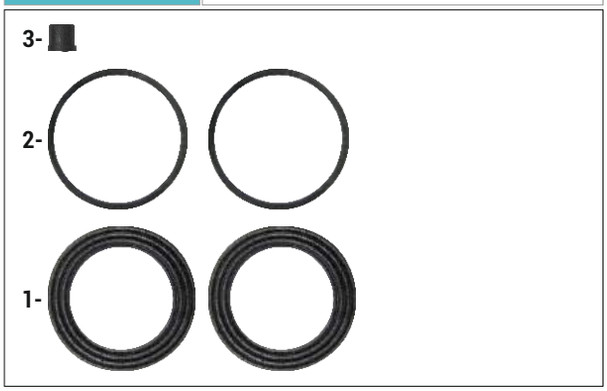

Operating Seals Kit (68 mm Piston)

OEM NUMBER	

NR	CHEEFT NR	DESCRIPTIONS	DIMENSION	QTY
1	7699	SEAL (68 mm Piston)		2
2	7700	SEAL (68 mm Piston)		2
3	7701	RUBBER PLUG		1

CHEEFT NUMBER	7003

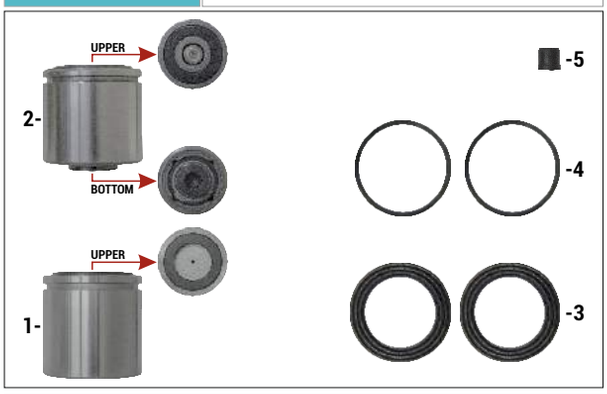

Caliper Piston & Seal Kit

OEM NUMBER	

NR	CHEEFT NR	DESCRIPTIONS	DIMENSION	QTY
1	7847	PISTON	Ø68 x 63,60 mm	1
2	7848	PISTON	Ø68 x 63,60 mm	1
3	7699	SEAL (68 mm Piston)		2
4	7700	SEAL (68 mm Piston)		2
5	7701	RUBBER PLUG		1

ORIGINAL PART NUMBERS,MARKS AND MODELS MENTIONED ARE ONLY FOR DESCRIPTION PURPOSES.

BRMB / MRT HYDRAULIC

CHEEFT NUMBER	7004

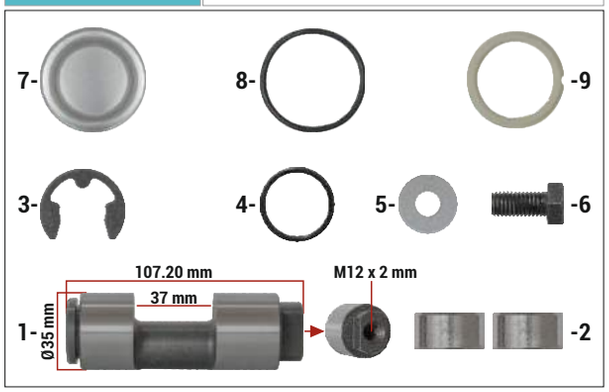

Caliper Hand Brake Repair Kit

OEM NUMBER	

NR	CHEEFT NR	DESCRIPTIONS	DIMENSION	QTY
1	7877	SETTING SHAFT		1
2	7602	BUSH	Ø39 x Ø35,20 x 19,85 mm	2
3	7656	CIRCLIP		1
4	7705	O-RING		1
5	7627	WASHER		1
6	7558	BOLT	M12 x 2 x 25 mm	1
7	7623	STEEL CAP		1
8	7704	O-RING		1
9	7826	PLASTIC WASHER		1

CHEEFT NUMBER	7005

Caliper Wedge Repair Kit

OEM NUMBER	

NR	CHEEFT NR	DESCRIPTIONS	DIMENSION	QTY
1	7875	ADJUSTMENT WEDGE		1
2	7709	FELT		1
3	7873	ADJUSTMENT WEDGE	Ø31,90 mm	1
4	7604	BUSH	(for Ø31,90 mm)	1

CHEEFT NUMBER	7006

Caliper Guide Pin Repair Kit

OEM NUMBER	

NR	CHEEFT NR	DESCRIPTIONS	DIMENSION	QTY
1	7500	GUIDE PIN	Ø22 x 90 mm	2
2	7551	BOLT	M12 x 1,75 x 110 mm	2
3	7702	PIN BOOT		4
4	7554	BOLT	M12 x 1,25 x 45 mm	4

ORIGINAL PART NUMBERS,MARKS AND MODELS MENTIONED ARE ONLY FOR DESCRIPTION PURPOSES.

BRMB / MRT HYDRAULIC

CHEEFT NUMBER	7007

Caliper Guide Pin Repair Kit

OEM NUMBER	

NR	CHEEFT NR	DESCRIPTIONS	DIMENSION	QTY
1	7500	GUIDE PIN	Ø22 x 90 mm	2
2	7551	BOLT	M12 x 1,75 x 110 mm	2
3	7702	PIN BOOT		4
4	7553	BOLT	M12 x 1,25 x 40 mm	4

CHEEFT NUMBER	7008

Caliper Adjusting Mechanism

OEM NUMBER	

NR	CHEEFT NR	DESCRIPTIONS	DIMENSION	QTY
1	7559	SETTING BOLT	M16 x 68,70 mm	1
2	7870	ADJUSTMENT SLOT		1
3	7629	SETTING WASHER		1

CHEEFT NUMBER	7009

Caliper Adjusting Mechanism

OEM NUMBER	

NR	CHEEFT NR	DESCRIPTIONS	DIMENSION	QTY
1	7560	SETTING BOLT	M16 x 79,70 mm	1
2	7870	ADJUSTMENT SLOT		1
3	7629	SETTING WASHER		1

ORIGINAL PART NUMBERS,MARKS AND MODELS MENTIONED ARE ONLY FOR DESCRIPTION PURPOSES.

BRMB / MRT HYDRAULIC

CHEEFT NUMBER	7010

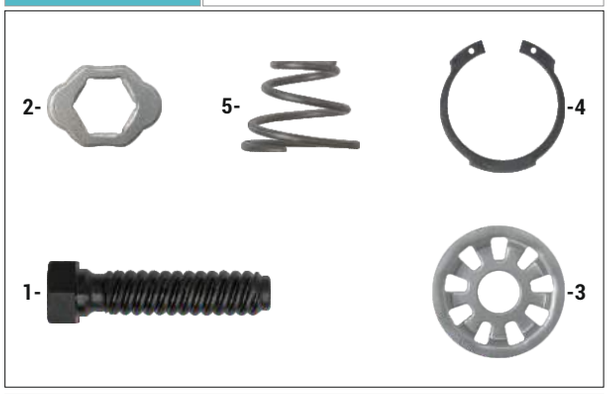

Caliper Setting Kit

OEM NUMBER	

NR	CHEEFT NR	DESCRIPTIONS	DIMENSION	QTY
1	7559	SETTING BOLT	M16 x 68,70 mm	1
2	7629	SETTING WASHER		1
3	7626	CLAMP		1
4	7655	CIRCLIP		1
5	7665	MECHANISM SPRING		1

CHEEFT NUMBER	7011

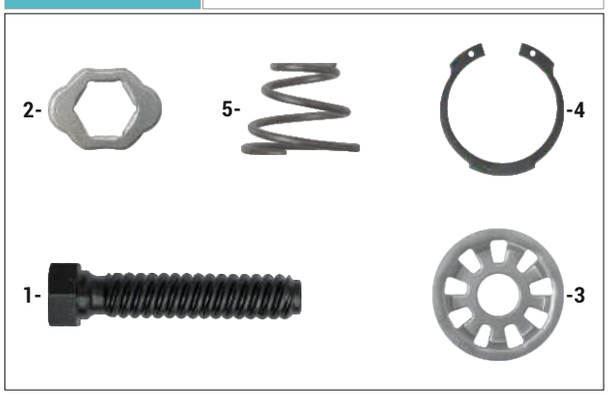

Caliper Setting Kit

OEM NUMBER	

NR	CHEEFT NR	DESCRIPTIONS	DIMENSION	QTY
1	7560	SETTING BOLT	M16 x 79,70 mm	1
2	7629	SETTING WASHER		1
3	7626	CLAMP		1
4	7655	CIRCLIP		1
5	7665	MECHANISM SPRING		1

CHEEFT NUMBER	7012

Caliper Guide Pin Repair Kit

OEM NUMBER	

NR	CHEEFT NR	DESCRIPTIONS	DIMENSION	QTY
1	7501	GUIDE PIN	Ø22 x 98 mm	2
2	7552	BOLT	M12 x 1,75 x 120 mm	2
3	7702	PIN BOOT		4
4	7554	BOLT	M12 x 1,25 x 45 mm	4

ORIGINAL PART NUMBERS,MARKS AND MODELS MENTIONED ARE ONLY FOR DESCRIPTION PURPOSES.

BRMB / MRT HYDRAULIC

CHEEFT NUMBER	7013

Caliper Guide Pin Repair Kit

OEM NUMBER	

NR	CHEEFT NR	DESCRIPTIONS	DIMENSION	QTY
1	7501	GUIDE PIN	Ø22 x 98 mm	2
2	7552	BOLT	M12 x 1,75 x 120 mm	2
3	7702	PIN BOOT		4
4	7553	BOLT	M12 x 1,25 x 40 mm	4

CHEEFT NUMBER	7014

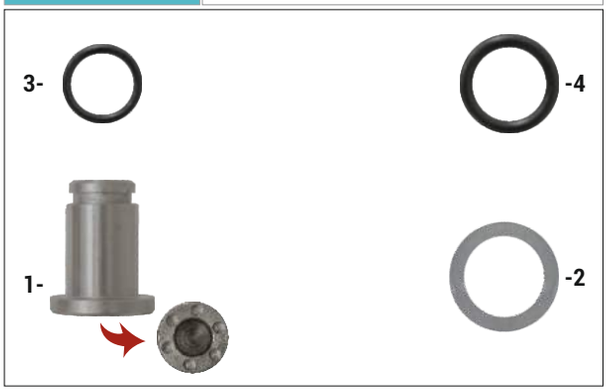

Caliper Wedge Repair Kit

OEM NUMBER	

NR	CHEEFT NR	DESCRIPTIONS	DIMENSION	QTY
1	7871	WEDGE	Ø32 x 39,25 mm	1
2	7630	WASHER		1
3	7707	O-RING		1
4	7706	O-RING		1

CHEEFT NUMBER	7015

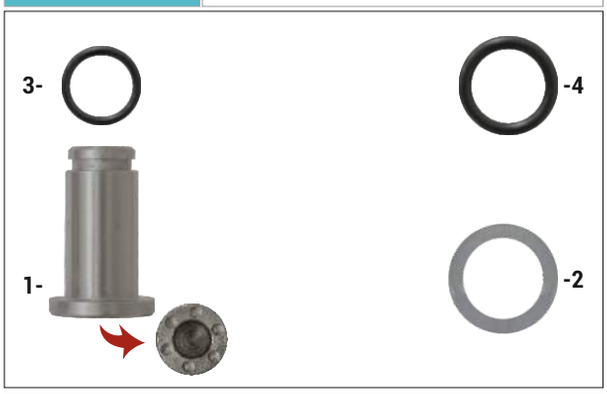

Caliper Wedge Repair Kit

OEM NUMBER	

NR	CHEEFT NR	DESCRIPTIONS	DIMENSION	QTY
1	7872	WEDGE	Ø32 x 50,75 mm	1
2	7630	WASHER		1
3	7707	O-RING		1
4	7706	O-RING		1

ORIGINAL PART NUMBERS,MARKS AND MODELS MENTIONED ARE ONLY FOR DESCRIPTION PURPOSES.

BRMB / MRT HYDRAULIC

CHEEFT NUMBER	7016

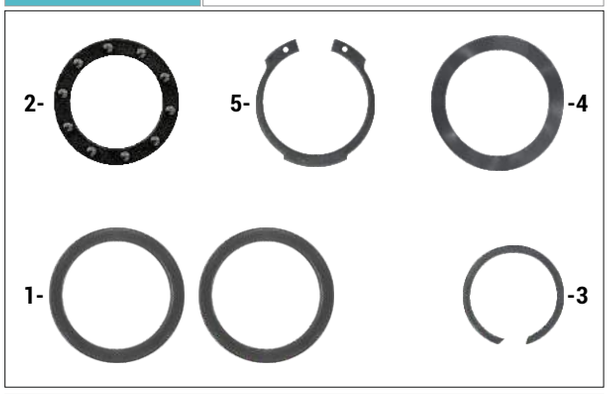

Caliper Washers & Circlip Repair Kit

OEM NUMBER	

NR	CHEEFT NR	DESCRIPTIONS	DIMENSION	QTY
1	7631	WASHER	Ø47 x Ø37 x 1 mm	2
2	7603	MECHANISM INNER BEARING		1
3	7657	CIRCLIP		1
4	7632	WASHER		1
5	7654	CIRCLIP		1

CHEEFT NUMBER	7017

Caliper Wedge Repair Kit

OEM NUMBER	

NR	CHEEFT NR	DESCRIPTIONS	DIMENSION	QTY
1	7876	ADJUSTMENT WEDGE		1
2	7712	FELT		1
3	7874	ADJUSTMENT WEDGE	Ø29,50 mm	1
4	7605	BUSH	(for Ø29,50 mm)	1

CHEEFT NUMBER	7018

Caliper Pad Retainer Kit

OEM NUMBER	MRT SP8563 - VLV 270526

NR	CHEEFT NR	DESCRIPTIONS	DIMENSION	QTY
1	7633	PIN		4
2	7634	CLAMP		4

ORIGINAL PART NUMBERS,MARKS AND MODELS MENTIONED ARE ONLY FOR DESCRIPTION PURPOSES.

BRMB / MRT HYDRAULIC

CHEEFT NUMBER	7023

Caliper Piston Kit

OEM NUMBER	

NR	CHEEFT NR	DESCRIPTIONS	DIMENSION	QTY
1	7837	PISTON	Ø52 x 58 mm	1
2	7838	PISTON	Ø46 x 58 mm	1

CHEEFT NUMBER	7024

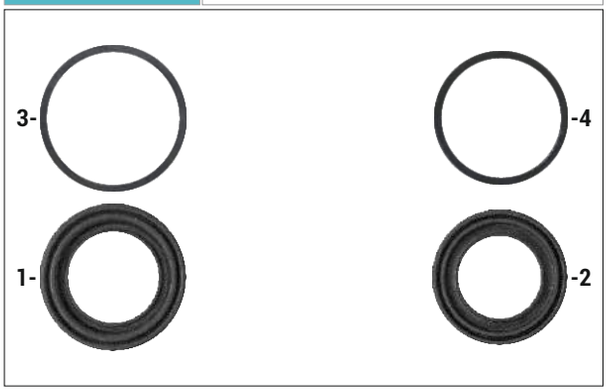

Caliper Operating Seals Kit

OEM NUMBER	

NR	CHEEFT NR	DESCRIPTIONS	DIMENSION	QTY
1	7677	SEAL (52 mm Piston)		1
2	7678	SEAL (46 mm Piston)		1
3	7679	SEAL (52 mm Piston)		1
4	7680	SEAL (46 mm Piston)		1

CHEEFT NUMBER	7025

Caliper Piston & Seal Kit

OEM NUMBER	

NR	CHEEFT NR	DESCRIPTIONS	DIMENSION	QTY
1	7837	PISTON	Ø52 x 58 mm	1
2	7838	PISTON	Ø46 x 58 mm	1
3	7677	SEAL (52 mm Piston)		1
4	7678	SEAL (46 mm Piston)		1
5	7679	SEAL (52 mm Piston)		1
6	7680	SEAL (46 mm Piston)		1

ORIGINAL PART NUMBERS,MARKS AND MODELS MENTIONED ARE ONLY FOR DESCRIPTION PURPOSES.

BRMB / MRT HYDRAULIC

CHEEFT NUMBER	7027

Caliper Piston Kit

OEM NUMBER	

NR	CHEEFT NR	DESCRIPTIONS	DIMENSION	QTY
1	7839	PISTON	Ø48 x 55,50 mm	2

CHEEFT NUMBER	7028

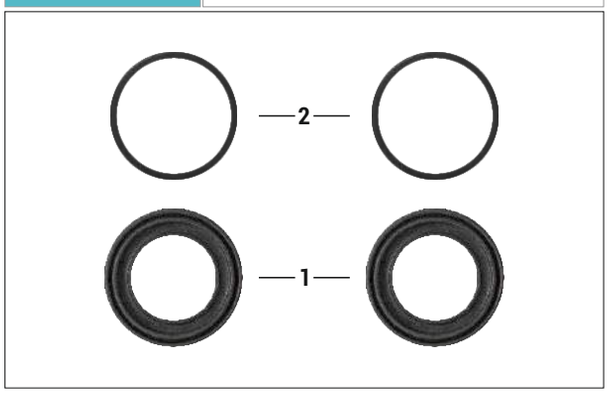

Caliper Operating Seals Kit (48 mm Piston)

OEM NUMBER	

NR	CHEEFT NR	DESCRIPTIONS	DIMENSION	QTY
1	7678	SEAL (46 mm Piston)		2
2	7685	SEAL (48 mm Piston)		2

CHEEFT NUMBER	7029

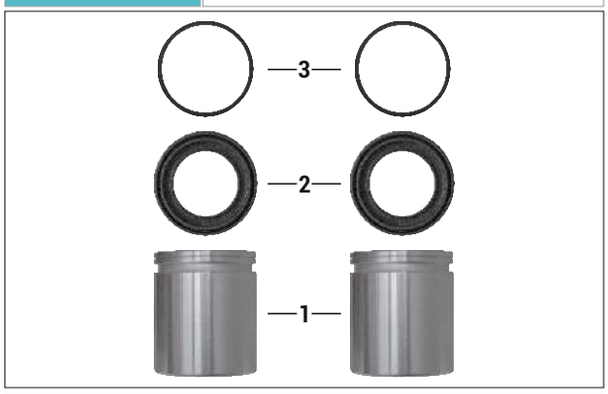

Caliper Piston & Seal Kit

OEM NUMBER	

NR	CHEEFT NR	DESCRIPTIONS	DIMENSION	QTY
1	7839	PISTON	Ø48 x 55,50 mm	2
2	7678	SEAL (46 mm Piston)		2
3	7685	SEAL (48 mm Piston)		2

ORIGINAL PART NUMBERS,MARKS AND MODELS MENTIONED ARE ONLY FOR DESCRIPTION PURPOSES.

BRMB / MRT HYDRAULIC

CHEEFT NUMBER	7031

Caliper Piston Kit

OEM NUMBER	

NR	CHEEFT NR	DESCRIPTIONS	DIMENSION	QTY
1	7840	PISTON	Ø48 x 59,50 mm	2

CHEEFT NUMBER	7032

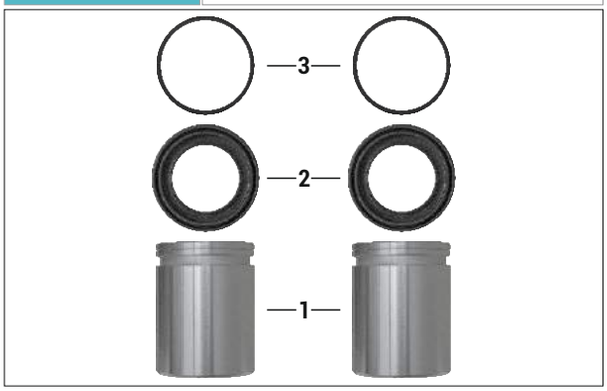

Caliper Piston & Seal Kit

OEM NUMBER	

NR	CHEEFT NR	DESCRIPTIONS	DIMENSION	QTY
1	7840	PISTON	Ø48 x 59,50 mm	2
2	7678	SEAL (46 mm Piston)		2
3	7685	SEAL (48 mm Piston)		2

CHEEFT NUMBER	7033

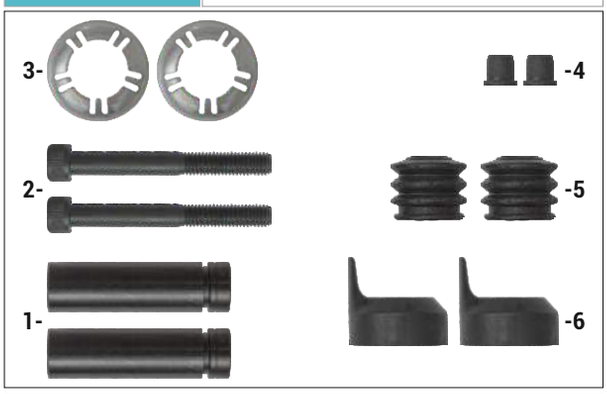

Caliper Guide Pin Repair Kit

OEM NUMBER	

NR	CHEEFT NR	DESCRIPTIONS	DIMENSION	QTY
1	7507	GUIDE PIN	Ø18 x 66 mm	2
2	7555	BOLT	M8 x 1,25 x 70 mm	2
3	7625	CLAMP		2
4	7682	RUBBER PLUG		2
5	7681	PIN BOOT		2
6	7703	PLUG		2

ORIGINAL PART NUMBERS,MARKS AND MODELS MENTIONED ARE ONLY FOR DESCRIPTION PURPOSES.

BRMB / MRT HYDRAULIC

CHEEFT NUMBER	7044

Caliper Piston Kit

OEM NUMBER	

NR	CHEEFT NR	DESCRIPTIONS	DIMENSION	QTY
1	7844	PISTON	Ø52 x 59,50 mm	2

CHEEFT NUMBER	7045

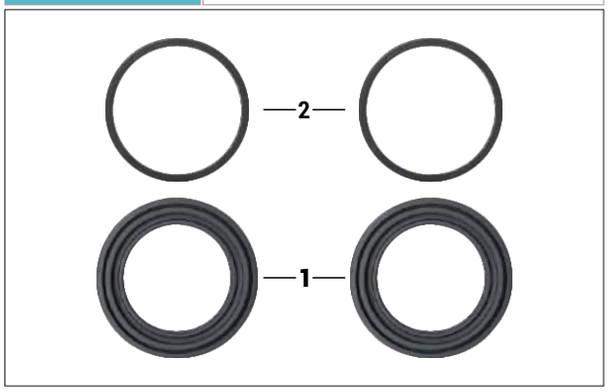

Operating Seals (52 mm Piston)

OEM NUMBER	

NR	CHEEFT NR	DESCRIPTIONS	DIMENSION	QTY
1	7696	SEAL (52 mm Piston)		2
2	7679	SEAL (52 mm Piston)		2

CHEEFT NUMBER	7046

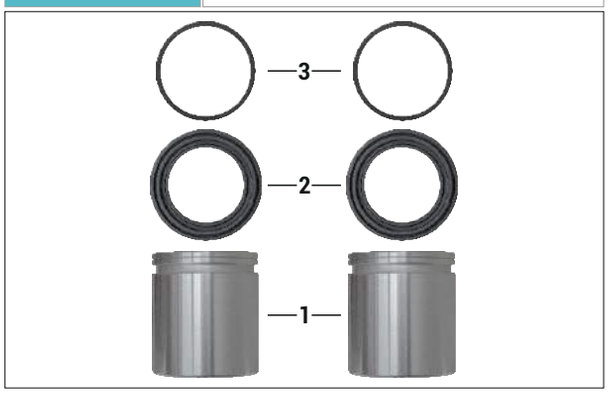

Caliper Piston & Seal Kit

OEM NUMBER	

NR	CHEEFT NR	DESCRIPTIONS	DIMENSION	QTY
1	7844	PISTON	Ø52 x 59,50 mm	2
2	7696	SEAL (52 mm Piston)		2
3	7679	SEAL (52 mm Piston)		2

ORIGINAL PART NUMBERS,MARKS AND MODELS MENTIONED ARE ONLY FOR DESCRIPTION PURPOSES.

BRMB / MRT HYDRAULIC

CHEEFT NUMBER	7047

Caliper Guide Pin Repair Kit

OEM NUMBER	

NR	CHEEFT NR	DESCRIPTIONS	DIMENSION	QTY
1	7510	GUIDE PIN	Ø18 x 67 mm	1
2	7509	GUIDE PIN	Ø18 x 66 mm	1
3	7555	BOLT	M8 x 1,25 x 70 mm	2
4	7684	PLUG		1
5	7698	RUBBER BUSH		1
6	7681	PIN BOOT		2
7	7703	PLUG		2

CHEEFT NUMBER	7026

Caliper Guide Pin Repair Kit

OEM NUMBER	

NR	CHEEFT NR	DESCRIPTIONS	DIMENSION	QTY
1	7502	GUIDE PIN	Ø18 x 64 mm	2
2	7555	BOLT	M8 x 1,25 x 70 mm	2
3	7682	PLUG		2
4	7681	PIN BOOT		2
5	7703	RUBBER PLUG		2

CHEEFT NUMBER	7030

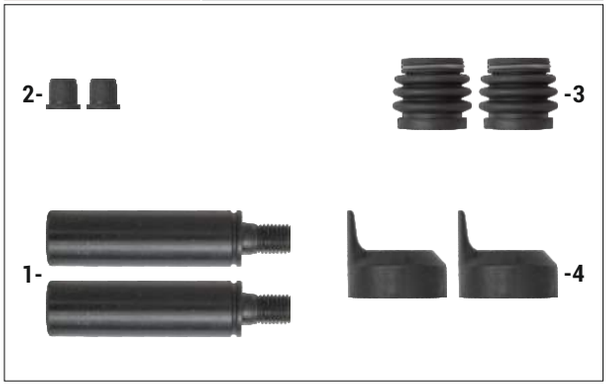

Caliper Guide Pin Repair Kit

OEM NUMBER	

NR	CHEEFT NR	DESCRIPTIONS	DIMENSION	QTY
1	7511	GUIDE PIN (WITH BOLT)	Ø18 x 63/79,50 mm	2
2	7682	RUBBER PLUG		2
3	7686	PIN BOOT		2
4	7703	PLUG		2

ORIGINAL PART NUMBERS,MARKS AND MODELS MENTIONED ARE ONLY FOR DESCRIPTION PURPOSES.

BRMB / MRT HYDRAULIC

CHEEFT NUMBER	7049

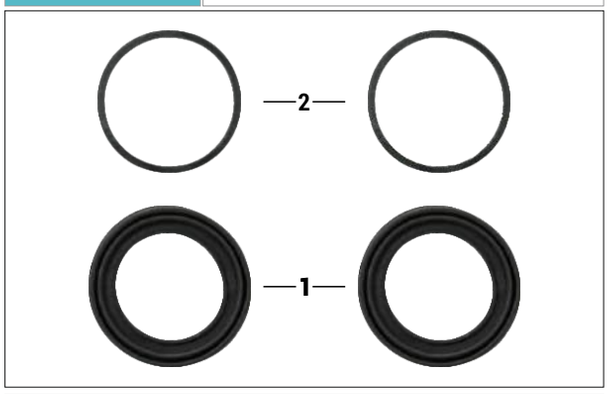

Operating Seals (60 mm Piston)

OEM NUMBER	

NR	CHEEFT NR	DESCRIPTIONS	DIMENSION	QTY
1	7675	SEAL		2
2	7676	SEAL		2

CHEEFT NUMBER	7050

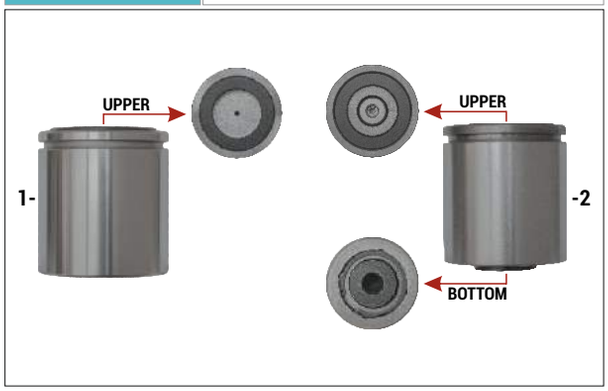

Caliper Piston Kit

OEM NUMBER	

NR	CHEEFT NR	DESCRIPTIONS	DIMENSION	QTY
1	7845	PISTON	Ø68 x 73,60 mm	1
2	7846	PISTON	Ø68 x 74,60 mm	1

CHEEFT NUMBER	7051

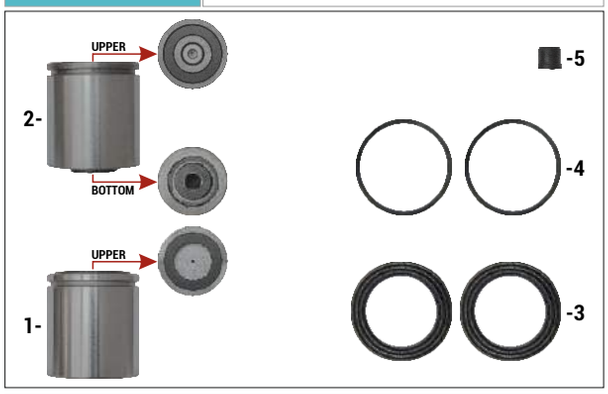

Caliper Piston & Seal Kit

OEM NUMBER	

NR	CHEEFT NR	DESCRIPTIONS	DIMENSION	QTY
1	7845	PISTON	Ø68 x 73,60 mm	1
2	7846	PISTON	Ø68 x 74,60 mm	1
3	7699	SEAL (68 mm Piston)		2
4	7700	SEAL (68 mm Piston)		2
5	7701	RUBBER PLUG		1

ORIGINAL PART NUMBERS,MARKS AND MODELS MENTIONED ARE ONLY FOR DESCRIPTION PURPOSES.

BRMB / MRT HYDRAULIC

CHEEFT NUMBER	7043

NR	CHEEFT NR	DESCRIPTIONS	DIMENSION	QTY
1	7507	GUIDE PIN	Ø18 x 66 mm	1
2	7508	GUIDE PIN	Ø18 x 66 mm	1
3	7555	BOLT	M8 x 1,25 x 70 mm	2
4	7682	PLUG		1
5	7698	RUBBER BUSH		1
6	7681	PIN BOOT		2
7	7703	PLUG		2

Caliper Guide Pin Repair Kit

OEM NUMBER	

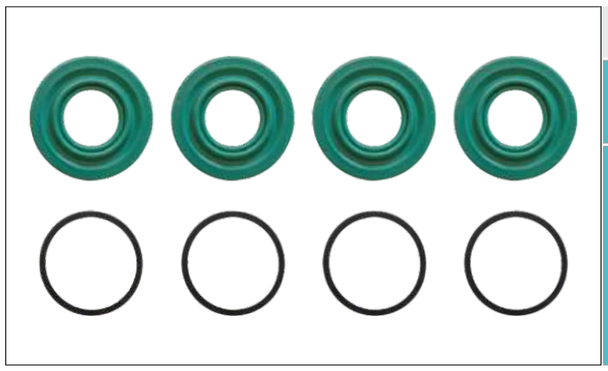

Caliper Boot Kit

CHEEFT NUMBER	7020
OEM NUMBER	IVC 93161181 - WBC 12 999 199VT

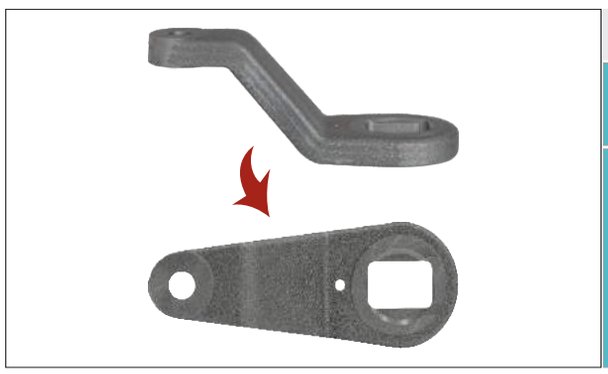

Caliper Shaft Lever

CHEEFT NUMBER	7019
OEM NUMBER	2A4405

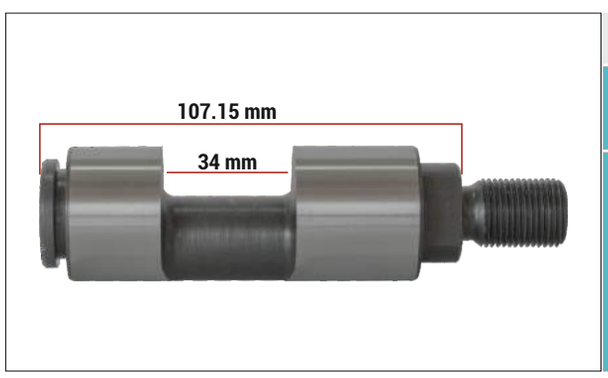

Setting Shaft

CHEEFT NUMBER	7878
OEM NUMBER	

HYDRAULIC CALIPER

ORIGINAL PART NUMBERS,MARKS AND MODELS MENTIONED ARE ONLY FOR DESCRIPTION PURPOSES.

BRMB / MRT HYDRAULIC

Setting Shaft	
CHEEFT NUMBER	7879
OEM NUMBER	

Setting Shaft	
CHEEFT NUMBER	7880
OEM NUMBER	

Grease Oil (2 gr)	
CHEEFT NUMBER	7995
OEM NUMBER	

ORIGINAL PART NUMBERS,MARKS AND MODELS MENTIONED ARE ONLY FOR DESCRIPTION PURPOSES.

BSCH

CHEEFT NUMBER	7021

Caliper Guide Pin Repair Kit

OEM NUMBER	MB 000 420 0476 - DF 1522179 IVECO 93161029 - 93161472 MRT SJ1035 -ST1153

NR	CHEEFT NR	DESCRIPTIONS	DIMENSION	QTY
1	7512	GUIDE PIN WITH WASHER	Ø20 x 71 mm	2
2	7561	BOLT	M12 x 1,25 x 85 mm	2
3	7624	STEEL CAP	Ø24 x 12 mm	2
4	7708	PIN BOOT		2

CHEEFT NUMBER	7022

Caliper Guide Pin Repair Kit

OEM NUMBER	IVECO 93161037 - 93161473 - MRT SJ1034

NR	CHEEFT NR	DESCRIPTIONS	DIMENSION	QTY
1	7512	GUIDE PIN WITH WASHER	Ø20 x 71 mm	2
2	7561	BOLT	M12 x 1,25 x 85 mm	2
3	7562	PLUG		2
4	7624	STEEL CAP	Ø24 x 12 mm	2
5	7708	PIN BOOT		2

CHEEFT NUMBER	7034

Caliper Piston & Seal Kit

OEM NUMBER	

NR	CHEEFT NR	DESCRIPTIONS	DIMENSION	QTY
1	7841	PISTON	Ø51 x 60,50 mm	1
2	7687	SEAL (51 mm Piston)		1
3	7688	SEAL (51 mm Piston)		1

ORIGINAL PART NUMBERS,MARKS AND MODELS MENTIONED ARE ONLY FOR DESCRIPTION PURPOSES.

BSCH

CHEEFT NUMBER	7035

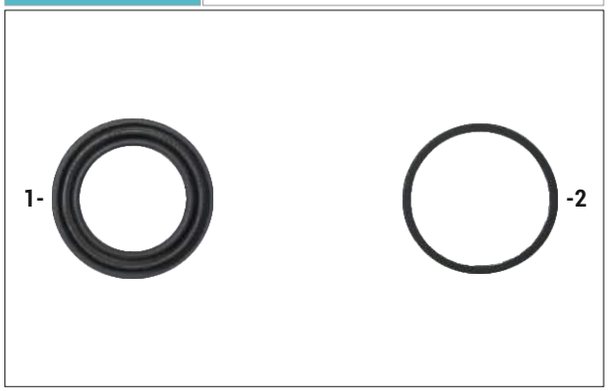

Caliper Operating Seals Kit (51 mm Piston)

OEM NUMBER	

NR	CHEEFT NR	DESCRIPTIONS	DIMENSION	QTY
1	7687	SEAL (51 mm Piston)		1
2	7688	SEAL (51 mm Piston)		1

CHEEFT NUMBER	7036

Caliper Guide Pin Repair Kit

OEM NUMBER	

NR	CHEEFT NR	DESCRIPTIONS	DIMENSION	QTY
1	7506	GUIDE PIN	Ø9,90 x 77 mm	1
2	7505	GUIDE PIN	Ø10 x 76,70 mm	1
3	7557	BOLT	M8 x 1 x 22 mm	2
4	7691	RUBBER BUSH		1
5	7692	PIN BOOT		2
6	7690	PLUG		1

CHEEFT NUMBER	7037

Caliper Piston Kit

OEM NUMBER	

NR	CHEEFT NR	DESCRIPTIONS	DIMENSION	QTY
1	7842	PISTON	Ø48 x 60,50 mm	2

ORIGINAL PART NUMBERS,MARKS AND MODELS MENTIONED ARE ONLY FOR DESCRIPTION PURPOSES.

BSCH

CHEEFT NUMBER	7038

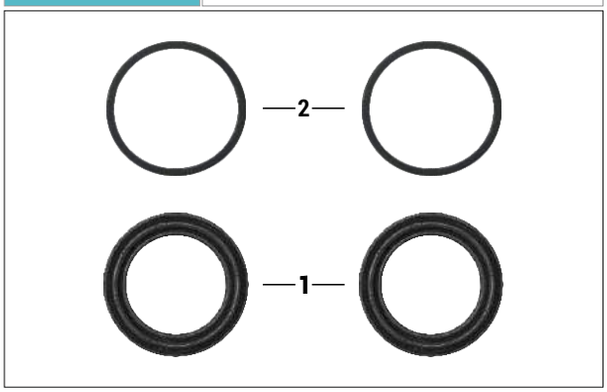

Operating Seals Kit (48 mm Piston)

OEM NUMBER	

NR	CHEEFT NR	DESCRIPTIONS	DIMENSION	QTY
1	7689	SEAL (48 mm Piston)		2
2	7685	SEAL (48 mm Piston)		2

CHEEFT NUMBER	7039

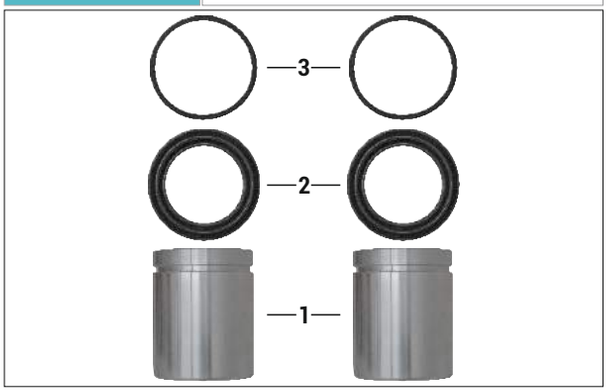

Caliper Operating Seals Kit

OEM NUMBER	

NR	CHEEFT NR	DESCRIPTIONS	DIMENSION	QTY
1	7842	PISTON	Ø48 x 60,50 mm	2
2	7689	SEAL (48 mm Piston)		2
3	7685	SEAL (48 mm Piston)		2

CHEEFT NUMBER	7040

Caliper Guide Pin Repair Kit

OEM NUMBER	

NR	CHEEFT NR	DESCRIPTIONS	DIMENSION	QTY
1	7504	GUIDE PIN	Ø12,15 x 82,50 mm	1
2	7503	GUIDE PIN	Ø11,40 x 82,50 mm	1
3	7556	BOLT	M10 x 1,25 x 32 mm	2
4	7711	RUBBER BUSH		1
5	7710	PIN BOOT		2
6	7690	PLUG		1

ORIGINAL PART NUMBERS,MARKS AND MODELS MENTIONED ARE ONLY FOR DESCRIPTION PURPOSES.

COHEEFT®

AIR DISC BRAKE CALIPER REPAIR KITS

HYDRAULIC CALIPER

HYDRAULIC CALIPER

BRMB / MRT HYDRAULIC BSCH SETS

Always the Best...

EAC CE UDEM JAS-ANZ ISO 9001 2015

BRMB / MRT HYDRAULIC / BSCH SETS

CALIPER REPAIR SET

CHEEFT NUMBER	CHS7001

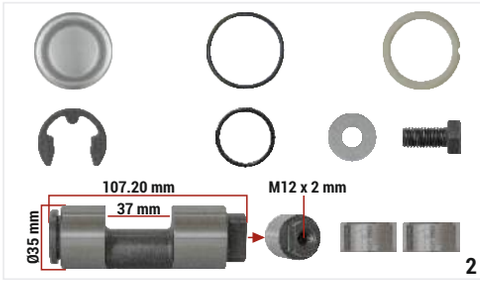

NR	CHEEFT NR	DESCRIPTIONS	QTY
1	7006	GUIDE PIN REPAIR KIT	1
2	7004	HAND BRAKE REPAIR KIT	1
3	7019	SHAFT LEVER	1
4	7003	PISTON & SEAL KIT	1
5	7010	SETTING KIT	1
6	7005	WEDGE REPAIR KIT	1

CALIPER REPAIR SET

CHEEFT NUMBER	CHS7002

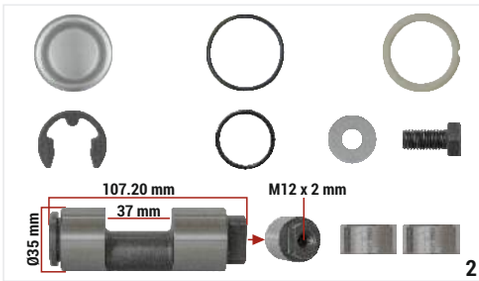

NR	CHEEFT NR	DESCRIPTIONS	QTY
1	7012	GUIDE PIN REPAIR KIT	1
2	7004	HAND BRAKE REPAIR KIT	1
3	7019	SHAFT LEVER	1
4	7051	PISTON & SEAL KIT	1
5	7011	SETTING KIT	1
6	7005	WEDGE REPAIR KIT	1

ORIGINAL PART NUMBERS,MARKS AND MODELS MENTIONED ARE ONLY FOR DESCRIPTION PURPOSES.

BRMB / MRT HYDRAULIC / BSCH SETS

CALIPER REPAIR SET (BSCH)

CHEEFT NUMBER: CHS7011

NR	CHEEFT NR	DESCRIPTIONS	QTY
1	7040	GUIDE PIN REPAIR KIT	1
2	7039	PISTON & SEAL KIT	1

CALIPER REPAIR SET (BSCH)

CHEEFT NUMBER: CHS7012

NR	CHEEFT NR	DESCRIPTIONS	QTY
1	7036	GUIDE PIN REPAIR KIT	1
2	7034	PISTON & SEAL KIT	1

ORIGINAL PART NUMBERS,MARKS AND MODELS MENTIONED ARE ONLY FOR DESCRIPTION PURPOSES.

BRMB / MRT HYDRAULIC / BSCH SETS

CALIPER REPAIR SET

CHEEFT NUMBER	CHS7021

NR	CHEEFT NR	DESCRIPTIONS	QTY
1	7026	GUIDE PIN REPAIR KIT	1
2	7025	PISTON & SEAL KIT	1

CALIPER REPAIR SET

CHEEFT NUMBER	CHS7022

NR	CHEEFT NR	DESCRIPTIONS	QTY
1	7030	GUIDE PIN REPAIR KIT	1
2	7029	PISTON & SEAL KIT	1

ORIGINAL PART NUMBERS,MARKS AND MODELS MENTIONED ARE ONLY FOR DESCRIPTION PURPOSES.

BRMB / MRT HYDRAULIC / BSCH SETS

CALIPER REPAIR SET

CHEEFT NUMBER: CHS7023

1

2

NR	CHEEFT NR	DESCRIPTIONS	QTY
1	7033	GUIDE PIN REPAIR KIT	1
2	7032	PISTON & SEAL KIT	1

CALIPER REPAIR SET

CHEEFT NUMBER: CHS7025

1

2

NR	CHEEFT NR	DESCRIPTIONS	QTY
1	7047	GUIDE PIN REPAIR KIT	1
2	7046	PISTON & SEAL KIT	1

ORIGINAL PART NUMBERS,MARKS AND MODELS MENTIONED ARE ONLY FOR DESCRIPTION PURPOSES.

COHEEFT®
AIR DISC BRAKE CALIPER REPAIR KITS

IVECO

IVECO

360 PERROT SERIES

COHEEFT®

AIR DISC BRAKE CALIPER REPAIR KITS

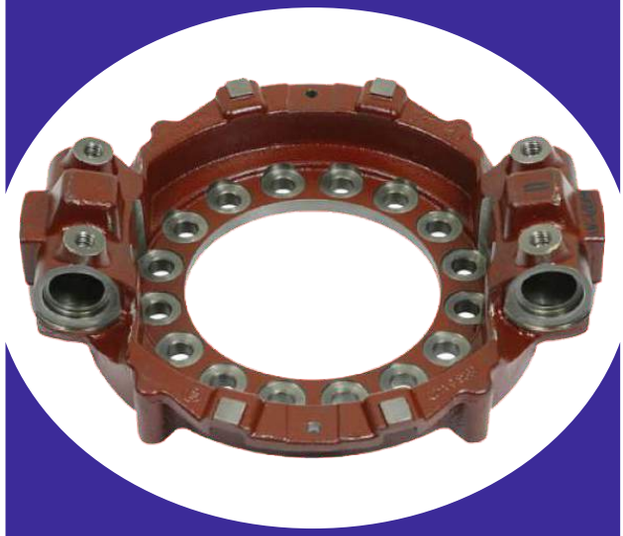

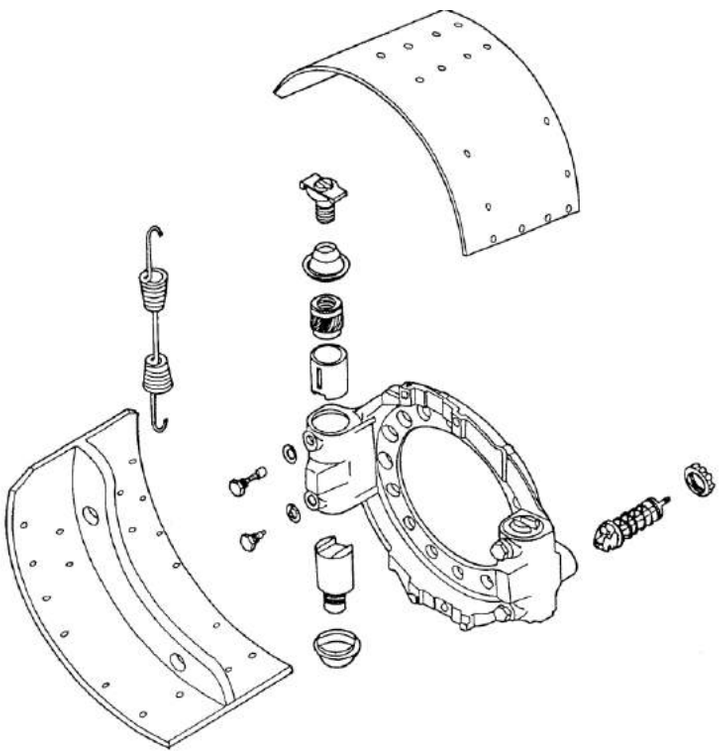

IVECO

360 PERROT SERIES

Always the Best...

IVECO

EAC CE UDEM JAS-ANZ ISO 9001 2015

360 PERROT SERIES

CHEEFT NUMBER	8665

Brake Repair Kit

OEM NUMBER	

NR	CHEEFT NR	DESCRIPTIONS	DIMENSION	QTY
1	8625	ADJUSTING BOLT		2
2	8632	BRAKE HOLDER	Ø41,50 mm	2
3	8629	SCREW		2
4	8630	BRAKE ADJUSTING NUT	Ø36 mm	2
5	8626	BRAKE ADJUSTING NUT		2
6	8502	CIRCLIP		2
7	8503	WASHER		2
8	8615	SEAL		2

CHEEFT NUMBER	8677

Brake Repair Kit

OEM NUMBER	93161254

NR	CHEEFT NR	DESCRIPTIONS	DIMENSION	QTY
1	8625	ADJUSTING BOLT		2
2	8615	SEAL		2
3	8503	WASHER		2
4	8502	CIRCLIP		2

CHEEFT NUMBER	8666

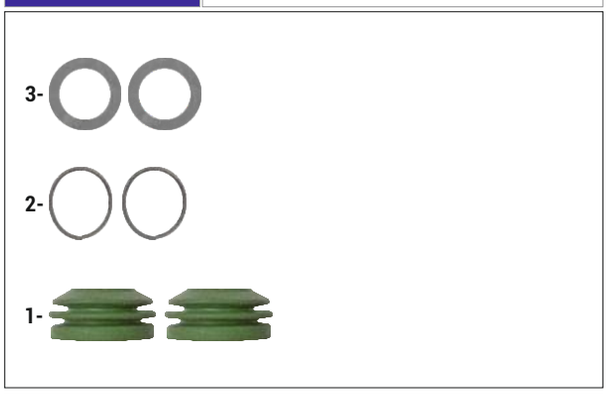

Brake Repair Kit

OEM NUMBER	93161257 - 12999404

NR	CHEEFT NR	DESCRIPTIONS	DIMENSION	QTY
1	8615	SEAL		2
2	8502	CIRCLIP		2
3	8503	WASHER		2

IVECO

ORIGINAL PART NUMBERS,MARKS AND MODELS MENTIONED ARE ONLY FOR DESCRIPTION PURPOSES.

360 PERROT SERIES

CHEEFT NUMBER	8667

Brake Repair Kit

OEM NUMBER	

NR	CHEEFT NR	DESCRIPTIONS	DIMENSION	QTY
1	8624	BRAKE ADJUSTING WEDGE		1
2	8632	BRAKE HOLDER	Ø41,50 mm	2

CHEEFT NUMBER	8674

Brake Adjusting Repair Kit

OEM NUMBER	

NR	CHEEFT NR	DESCRIPTIONS	DIMENSION	QTY
1	8630	BRAKE ADJUSTING NUT	Ø36 mm	2
2	8626	BRAKE ADJUSTING NUT		2
3	8629	SCREW		2

CHEEFT NUMBER	8785

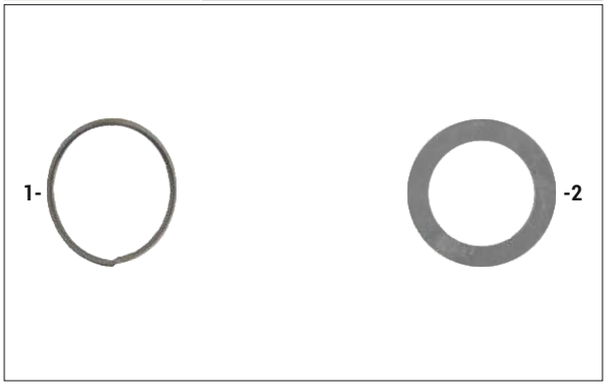

Holder Ring & Circlip Kit

OEM NUMBER	

NR	CHEEFT NR	DESCRIPTIONS	DIMENSION	QTY
1	8502	CIRCLIP		1
2	8503	WASHER		1

ORIGINAL PART NUMBERS,MARKS AND MODELS MENTIONED ARE ONLY FOR DESCRIPTION PURPOSES.

360 PERROT SERIES

Brake Adjusting Wedge	
CHEEFT NUMBER	8624
OEM NUMBER	93161768

Brake Adjusting Nut (Ø36 mm)	
CHEEFT NUMBER	8630
OEM NUMBER	

Screw	
CHEEFT NUMBER	8629
OEM NUMBER	

Brake Holder (Ø41,50 mm)	
CHEEFT NUMBER	8632
OEM NUMBER	

Clamp	
CHEEFT NUMBER	8676
OEM NUMBER	

IVECO

ORIGINAL PART NUMBERS,MARKS AND MODELS MENTIONED ARE ONLY FOR DESCRIPTION PURPOSES.

360 PERROT SERIES

Adjusting Bolt	
CHEEFT NUMBER	8625
OEM NUMBER	

Brake Adjusting Nut	
CHEEFT NUMBER	8627
OEM NUMBER	

Seal	
CHEEFT NUMBER	8615
OEM NUMBER	93161257

ORIGINAL PART NUMBERS,MARKS AND MODELS MENTIONED ARE ONLY FOR DESCRIPTION PURPOSES.

COHEEFT®
AIR DISC BRAKE CALIPER REPAIR KITS

IVECO

394/381
DUPLEX SERIES

IVECO

Always the Best...

EAC CE

COHEEFT®

AIR DISC BRAKE CALIPER REPAIR KITS

IVECO

394/381
DUPLEX SERIES

IVECO

Always the Best...

EAC CE UDEM JAS-ANZ ISO 9001 2015

394/381 DUPLEX SERIES

CHEEFT NUMBER	8701

Brake Repair Kit

OEM NUMBER	

NR	CHEEFT NR	DESCRIPTIONS	DIMENSION	QTY
1	8603	ADJUSTING BOLT		2
2	8606	ADJUSTING BOLT SLEEVE (THIN TEETH)		2
3	8609	BRAKE HOLDER	Ø34,90 mm	2
4	8612	SCREW (THIN TEETH)	19 mm	2
5	8614	SEAL		2
6	8504	SPRING		2

CHEEFT NUMBER	8648

Brake Adjusting Bolt & Bush Kit

OEM NUMBER	

NR	CHEEFT NR	DESCRIPTIONS	DIMENSION	QTY
1	8603	ADJUSTING BOLT		1
2	8606	ADJUSTING BOLT SLEEVE (THIN TEETH)		1

CHEEFT NUMBER	8660

Brake Dust Cover Kit

OEM NUMBER	MRT RBSK0251B.M BRDMNRNBS 192757 ZF 0501298164 - IVECO 7980408

NR	CHEEFT NR	DESCRIPTIONS	DIMENSION	QTY
1	8614	SEAL		4
2	8618	SEAL		4

IVECO

ORIGINAL PART NUMBERS,MARKS AND MODELS MENTIONED ARE ONLY FOR DESCRIPTION PURPOSES.

394/381 DUPLEX SERIES

CHEEFT NUMBER	8653

Brake Adjusting Repair Kit (Left)

OEM NUMBER	MRT RBSK0248B.M BRDMNRNBS 192754 AWD A4023357 - IVECO 7980405

NR	CHEEFT NR	DESCRIPTIONS	DIMENSION	QTY
1	8633	PLUNGER (LEFT)	Ø34.90 mm	2
2	8611	SCREW	19 mm	2
3	8618	SEAL		2

CHEEFT NUMBER	8654

Brake Adjusting Repair Kit (Right)

OEM NUMBER	MRT RBSK0248B.M BRDMNRNBS 192755 VNHL 10610921 - IVECO 7980406

NR	CHEEFT NR	DESCRIPTIONS	DIMENSION	QTY
1	8634	PLUNGER (RIGHT)	Ø34.90 mm	2
2	8611	SCREW	19 mm	2
3	8618	SEAL		2

CHEEFT NUMBER	8649

Brake Adjusting Repair Kit

OEM NUMBER	MRT RBSK0549B.M - VLV 272857 IVECO 42491974 - BRDMNRNBS 192752 VNHL 634321204

NR	CHEEFT NR	DESCRIPTIONS	DIMENSION	QTY
1	8609	BRAKE HOLDER	Ø34,90 mm	1
2	8606	ADJUSTING BOLT SLEEVE (THIN TEETH)		1
3	8612	SCREW (THIN TEETH)	19 mm	1

ORIGINAL PART NUMBERS,MARKS AND MODELS MENTIONED ARE ONLY FOR DESCRIPTION PURPOSES.

394/381 DUPLEX SERIES

CHEEFT NUMBER	8620

Brake Adjusting Wedge Kit

OEM NUMBER	7980407-A2247U47

NR	CHEEFT NR	DESCRIPTIONS	DIMENSION	QTY
1	8622	BRAKE ADJUSTING WEDGE		2

Brake Adjusting Wedge

CHEEFT NUMBER	8622
OEM NUMBER	MRT RBSK0250B.M BRDMNRNBS 192756 ZF 0501298159 - AWD A4022499 IVECO 7980407 - 93161353

Brake Adjusting Wedge

CHEEFT NUMBER	8607
OEM NUMBER	

Adjusting Bolt

CHEEFT NUMBER	8603
OEM NUMBER	MRT A164002 - A2297L3158 - VLV 1696537 NSSN 69028770 - PCCR Y07088205 VNHL 634321222 - IVECO 42480059

IVECO

ORIGINAL PART NUMBERS,MARKS AND MODELS MENTIONED ARE ONLY FOR DESCRIPTION PURPOSES.

394/381 DUPLEX SERIES

Brake Holder (Ø34,90 mm)

CHEEFT NUMBER	8609
OEM NUMBER	MRT 3280Y8163 - VNHL 634321225 IVECO 42480060

Plunger Ø34,90 mm (Left)

CHEEFT NUMBER	8633
OEM NUMBER	MRT 2297J4820 - IVECO 7984217

Plunger Ø34,90 mm (Right)

CHEEFT NUMBER	8634
OEM NUMBER	MRT 2297K4821 - IVECO 7984216

Screw (19 mm)

CHEEFT NUMBER	8611
OEM NUMBER	MRT A1779M195 - VLV 1695050 VNHL 634321230 - IVECO 42488739

Screw 19 mm (Thin Teeth)

CHEEFT NUMBER	8612
OEM NUMBER	MRT A22297U4597 - VNHL 634321229 IVECO 42488735

IVECO

ORIGINAL PART NUMBERS,MARKS AND MODELS MENTIONED ARE ONLY FOR DESCRIPTION PURPOSES.

394/381 DUPLEX SERIES

Adjusting Bolt Sleeve (Thin Teeth)

CHEEFT NUMBER	8606
OEM NUMBER	MRT 3280S8131 - IVECO 42480058

Seal

CHEEFT NUMBER	8618
OEM NUMBER	MN ST1205C1667 - IVECO 42488737 MRT 1205C1667 - 1205B2004 - VLV 1696219 VNHL 634321228

Seal

CHEEFT NUMBER	8614
OEM NUMBER	MN ST1205B1666 IVECO 42488736 - 3351848R1 MRT 1205B1666 - 1205C2005 VLV 1696218 - NSSN 69028780 PCCR Y03018404 - VANHOOL 634321223 FORD 82DB2B009AA

Grooved Nut (Long)

CHEEFT NUMBER	8658
OEM NUMBER	MRT 165005 - IVECO 42063178

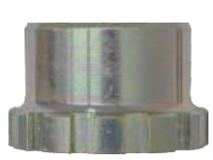

Grooved Nut (Short)

CHEEFT NUMBER	8657
OEM NUMBER	MRT 165017 - IVECO 4756032

ORIGINAL PART NUMBERS,MARKS AND MODELS MENTIONED ARE ONLY FOR DESCRIPTION PURPOSES.

394/381 DUPLEX SERIES

Clamp Kit	
CHEEFT NUMBER	8617
OEM NUMBER	MRT 2257D108 - 2257M1001 VLV 6770266 - NSSN 69028800 PCCR Y03018809 - VNHL 634321233 FORD 82DB2B026AA - IVECO 42488484

IVECO

ORIGINAL PART NUMBERS,MARKS AND MODELS MENTIONED ARE ONLY FOR DESCRIPTION PURPOSES.

COHEEFT®
AIR DISC BRAKE CALIPER REPAIR KITS

IVECO

410 DUPLEX SERIES

IVECO

Always the Best...

EAC CE UDEM JAS-ANZ ISO 9001 2015

COHEEFT®

AIR DISC BRAKE CALIPER REPAIR KITS

IVECO

410 DUPLEX SERIES

IVECO

Always the Best...

EAC CE UDEM JAS-ANZ ISO 9001 2015

410 DUPLEX SERIES

CHEEFT NUMBER	8704

Brake Adjusting Repair Kit (Thick Teeth - Old Model)

OEM NUMBER	MRT RBSK1408.M IVECO 42558430 - 93161622 - 93162114

NR	CHEEFT NR	DESCRIPTIONS	DIMENSION	QTY
1	8601	ADJUSTING BOLT		2
2	8604	ADJUSTING BOLT SLEEVE (THICK TEETH)		2
3	8786	BRAKE HOLDER	Ø38,50 mm	2
4	8610	SCREW (THICK TEETH)	22 mm	2
5	8613	SEAL		2
6	8602	SPRING (THICK TEETH)		2

CHEEFT NUMBER	8673

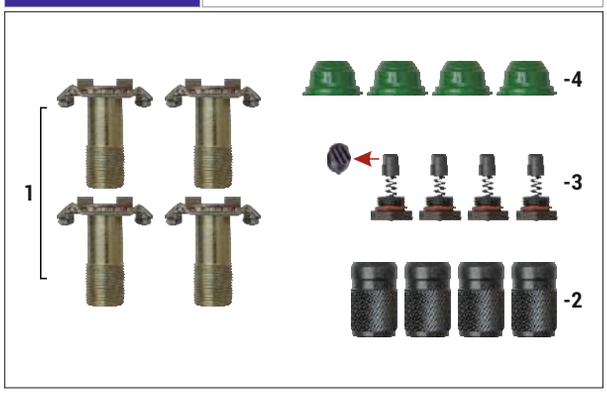

Brake Repair Kit (Thick Teeth - New Type)

OEM NUMBER	2996557

NR	CHEEFT NR	DESCRIPTIONS	DIMENSION	QTY
1	8643	BRAKE ADJUSTING BOLT WITH LOCK		4
2	8604	ADJUSTING BOLT SLEEVE (THICK TEETH)		4
3	8610	SCREW (THICK TEETH)	22 mm	4
4	8613	SEAL		4

CHEEFT NUMBER	8776

Brake Adjusting Repair Kit (Thick Teeth - New Model)

OEM NUMBER	42536197

NR	CHEEFT NR	DESCRIPTIONS	DIMENSION	QTY
1	8643	BRAKE ADJUSTING BOLT WITH LOCK		2
2	8604	ADJUSTING BOLT SLEEVE (THICK TEETH)		2
3	8786	BRAKE HOLDER	Ø38,50 mm	2
4	8610	SCREW (THICK TEETH)	22 mm	2
5	8613	SEAL		2
6	8602	SPRING		2

ORIGINAL PART NUMBERS,MARKS AND MODELS MENTIONED ARE ONLY FOR DESCRIPTION PURPOSES.

410 DUPLEX SERIES

CHEEFT NUMBER	8644

Brake Adjusting Bolt & Bush (Thick Teeth - New Type)

OEM NUMBER	

NR	CHEEFT NR	DESCRIPTIONS	DIMENSION	QTY
1	8601	BRAKE ADJUSTING BOLT		1
2	8604	ADJUSTING BOLT SLEEVE (THICK TEETH)		1
3	8786	BRAKE HOLDER	Ø38,50 mm	1

CHEEFT NUMBER	8645

Brake Adjusting Bolt & Bush Kit (Thick Teeth - New Type)

OEM NUMBER	42531676

NR	CHEEFT NR	DESCRIPTIONS	DIMENSION	QTY
1	8601	BRAKE ADJUSTING BOLT		1
2	8604	ADJUSTING BOLT SLEEVE (THICK TEETH)		1

CHEEFT NUMBER	8652

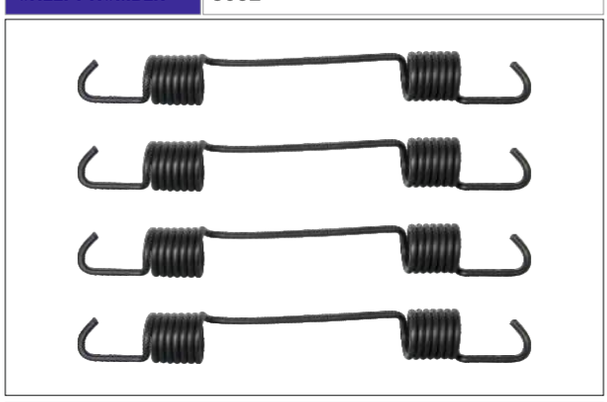

Return Spring Kit (New Model)

OEM NUMBER	42536192

NR	CHEEFT NR	DESCRIPTIONS	DIMENSION	QTY
1	8602	BRAKE SHOE RETURN SPRING		4

IVECO

ORIGINAL PART NUMBERS,MARKS AND MODELS MENTIONED ARE ONLY FOR DESCRIPTION PURPOSES.

410 DUPLEX SERIES

CHEEFT NUMBER	8656

Brake Plunger Kit Right (New Model)

OEM NUMBER	MRT RBSK1599.M - RBSK1606.M IVECO 42537363 - 42537365

NR	CHEEFT NR	DESCRIPTIONS	DIMENSION	QTY
1	8640	PLUNGER (RIGHT)	Ø38,50 mm	2
2	8637	SCREW	22 mm	2
3	8616	SEAL		2

CHEEFT NUMBER	8655

Brake Plunger Kit Left (New Model)

OEM NUMBER	MRT RBSK1600.M - RBSK1607.M IVECO 42537364 - 42537366

NR	CHEEFT NR	DESCRIPTIONS	DIMENSION	QTY
1	8639	PLUNGER (LEFT)	Ø38,50 mm	2
2	8637	SCREW	22 mm	2
3	8616	SEAL		2

CHEEFT NUMBER	8646

Seal Kit

OEM NUMBER	42536193

NR	CHEEFT NR	DESCRIPTIONS	DIMENSION	QTY
1	8613	SEAL		4
2	8616	SEAL		4

IVECO

ORIGINAL PART NUMBERS,MARKS AND MODELS MENTIONED ARE ONLY FOR DESCRIPTION PURPOSES.

410 DUPLEX SERIES

Seal	
CHEEFT NUMBER	8613
OEM NUMBER	MN 8600569 - IVECO 42531677 MRT 1205X2000 - VLV 1698588 NSSN 69026590 - FORD 6C462B009AA

Seal	
CHEEFT NUMBER	8616
OEM NUMBER	MRT 1205E2683 - FORD 6C462B009BA IVECO 42537841

Ø38,50 mm

Plunger Ø38,50 mm (Left)	
CHEEFT NUMBER	8639
OEM NUMBER	MRT 2297H8354 - IVECO 42537364 FORD 6C462A170BA

Ø38,50 mm

Plunger Ø38,50 mm (Right)	
CHEEFT NUMBER	8640
OEM NUMBER	MRT 2297J8356 - IVECO 42537365 FORD 6C462A170AA

Ø38,50 mm

Brake Holder (Ø38,50 mm)	
CHEEFT NUMBER	8786
OEM NUMBER	MRT 3280W8369 - FORD 6C462A170CA

IVECO

ORIGINAL PART NUMBERS,MARKS AND MODELS MENTIONED ARE ONLY FOR DESCRIPTION PURPOSES.

410 DUPLEX SERIES

CHEEFT NUMBER	8659

Seal Kit

OEM NUMBER	93161625

NR	CHEEFT NR	DESCRIPTIONS	DIMENSION	QTY
1	8613	SEAL		4

CHEEFT NUMBER	8664

Brake Adjusting Wedge Kit

OEM NUMBER	DF 1258802 - IVECO 42536194 - 42537942 93161621 - MRT RBSK1255.M - RBSK1573.M RBSK2051.M

NR	CHEEFT NR	DESCRIPTIONS	DIMENSION	QTY
1	8623	BRAKE ADJUSTING WEDGE		2

Brake Adjusting Wedge

CHEEFT NUMBER	8623
OEM NUMBER	DF 1258802 IVECO 42536194 - 42537942 - 93161621 MRT RBSK1255.M - RBSK1573.M - RBSK2051.M

IVECO

ORIGINAL PART NUMBERS,MARKS AND MODELS MENTIONED ARE ONLY FOR DESCRIPTION PURPOSES.

410 DUPLEX SERIES

Brake Adjusting Bolt With Lock	
CHEEFT NUMBER	8643
OEM NUMBER	

Brake Adjusting Bolt	
CHEEFT NUMBER	8601
OEM NUMBER	MRT A2297S8287 - A22297E5907 IVECO 42531676 - 42537758

Grooved Nut (Long)	
CHEEFT NUMBER	8647
OEM NUMBER	

Screw (22 mm)	
CHEEFT NUMBER	8637
OEM NUMBER	MRT A12297S8287 - FORD 6C462A105AB

Screw 22 mm (Thick Teeth)	
CHEEFT NUMBER	8610
OEM NUMBER	MRT A2297U4597

IVECO

ORIGINAL PART NUMBERS,MARKS AND MODELS MENTIONED ARE ONLY FOR DESCRIPTION PURPOSES.

410 DUPLEX SERIES

Brake Shoe Return Spring (Thin)	
CHEEFT NUMBER	8602
OEM NUMBER	MRT 2258Y1507 - FORD 6C462L371AA

Adjusting Bolt Sleeve (Thick Teeth)	
CHEEFT NUMBER	8604
OEM NUMBER	MRT 3280T8964 - FORD 6C462B003AA

Screw 22 mm (New Model)	
CHEEFT NUMBER	8788
OEM NUMBER	MRT A2297J8798

ORIGINAL PART NUMBERS,MARKS AND MODELS MENTIONED ARE ONLY FOR DESCRIPTION PURPOSES.

COHEEFT®

AIR DISC BRAKE CALIPER REPAIR KITS

IVECO

410 PERROT SERIES

IVECO

Always the Best...

EAC CE UDEM JAS-ANZ ISO 9001 2015

410 PERROT SERIES

CHEEFT NUMBER	8702

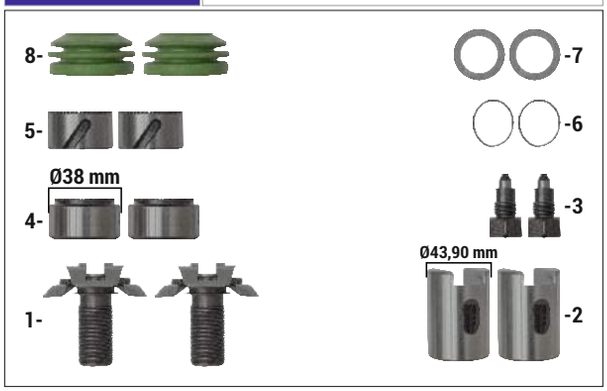

Brake Repair Kit

OEM NUMBER	IVECO 93161256 - DF 1505884 WBC 12 999 411VT

NR	CHEEFT NR	DESCRIPTIONS	DIMENSION	QTY
1	8625	ADJUSTING BOLT		2
2	8628	BRAKE HOLDER	Ø43,90 mm	2
3	8629	SCREW		2
4	8626	BRAKE ADJUSTING NUT	Ø38 mm	2
5	8626	BRAKE ADJUSTING NUT		2
6	8502	CIRCLIP		2
7	8503	WASHER		2
8	8615	SEAL		2

CHEEFT NUMBER	8700

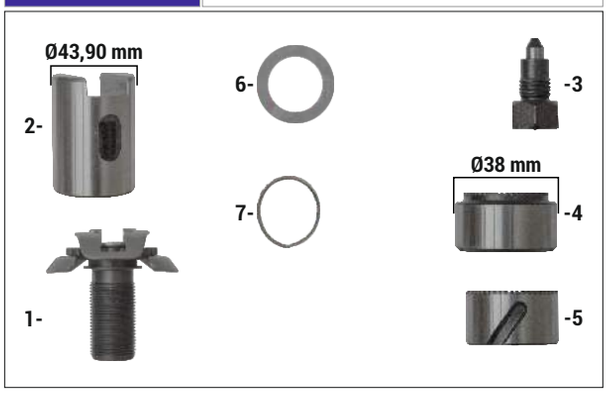

Brake Repair Kit

OEM NUMBER	

NR	CHEEFT NR	DESCRIPTIONS	DIMENSION	QTY
1	8625	ADJUSTING BOLT		1
2	8628	BRAKE HOLDER	Ø43,90 mm	1
3	8629	SCREW		1
4	8626	BRAKE ADJUSTING NUT	Ø38 mm	1
5	8626	BRAKE ADJUSTING NUT		1
6	8502	CIRCLIP		1
7	8503	WASHER		1

CHEEFT NUMBER	8669

Brake Repair Kit

OEM NUMBER	1518475 - 93161267

NR	CHEEFT NR	DESCRIPTIONS	DIMENSION	QTY
1	8638	BRAKE ADJUSTING WEDGE		1
2	8628	BRAKE HOLDER	Ø43,90 mm	2

IVECO

ORIGINAL PART NUMBERS,MARKS AND MODELS MENTIONED ARE ONLY FOR DESCRIPTION PURPOSES.

410 PERROT SERIES

CHEEFT NUMBER	8668

Brake Adjusting Repair Kit

OEM NUMBER	

NR	CHEEFT NR	DESCRIPTIONS	DIMENSION	QTY
1	8626	BRAKE ADJUSTING NUT	Ø38 mm	2
2	8626	BRAKE ADJUSTING NUT		2
3	8629	SCREW		2

CHEEFT NUMBER	8677

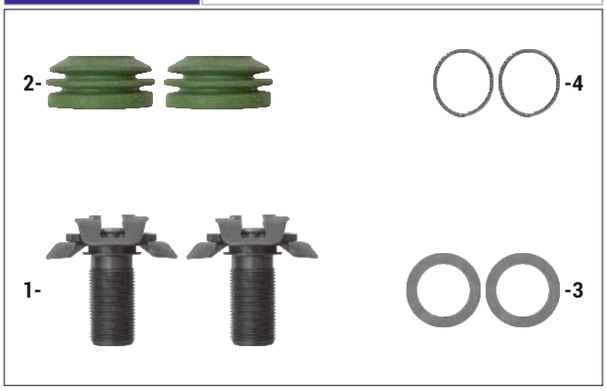

Brake Repair Kit

OEM NUMBER	93161254

NR	CHEEFT NR	DESCRIPTIONS	DIMENSION	QTY
1	8625	ADJUSTING BOLT		2
2	8615	SEAL		2
3	8503	WASHER		2
4	8502	CIRCLIP		2

CHEEFT NUMBER	8666

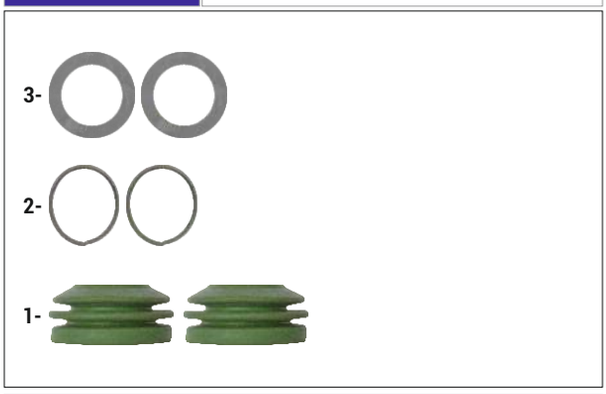

Brake Repair Kit

OEM NUMBER	93161257 - 12999404

NR	CHEEFT NR	DESCRIPTIONS	DIMENSION	QTY
1	8615	SEAL		2
2	8502	CIRCLIP		2
3	8503	WASHER		2

ORIGINAL PART NUMBERS,MARKS AND MODELS MENTIONED ARE ONLY FOR DESCRIPTION PURPOSES.

410 PERROT SERIES

CHEEFT NUMBER	8621

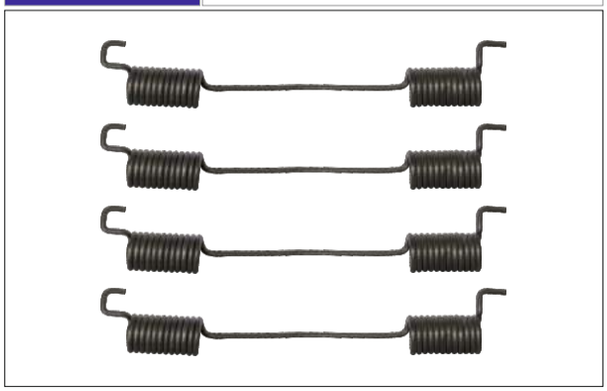

Spring Kit

OEM NUMBER	93161260

NR	CHEEFT NR	DESCRIPTIONS	DIMENSION	QTY
1	8501	SPRING		4

CHEEFT NUMBER	8651

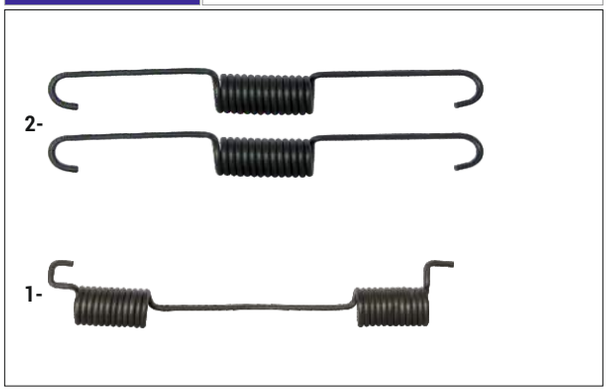

Return Spring Kit

OEM NUMBER	IVECO 93161627 - 42538063 MRT RBSK2128.M

NR	CHEEFT NR	DESCRIPTIONS	DIMENSION	QTY
1	8501	SPRING		1
2	8605	BRAKE SHOE RETURN SPRING		2

CHEEFT NUMBER	8785

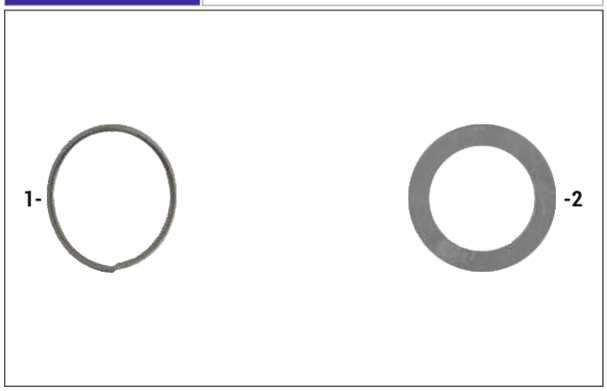

Holder Ring & Circlip Kit

OEM NUMBER	

NR	CHEEFT NR	DESCRIPTIONS	DIMENSION	QTY
1	8502	CIRCLIP		1
2	8503	WASHER		1

IVECO

ORIGINAL PART NUMBERS,MARKS AND MODELS MENTIONED ARE ONLY FOR DESCRIPTION PURPOSES.

410 PERROT SERIES

Adjusting Bolt	
CHEEFT NUMBER	8625
OEM NUMBER	

Brake Adjusting Nut (Ø38 mm)	
CHEEFT NUMBER	8626
OEM NUMBER	

Brake Adjusting Nut	
CHEEFT NUMBER	8627
OEM NUMBER	

Brake Holder (Ø43,90 mm)	
CHEEFT NUMBER	8628
OEM NUMBER	

Screw	
CHEEFT NUMBER	8629
OEM NUMBER	

IVECO

ORIGINAL PART NUMBERS,MARKS AND MODELS MENTIONED ARE ONLY FOR DESCRIPTION PURPOSES.

410 PERROT SERIES

Brake Adjusting Wedge	
CHEEFT NUMBER	8638
OEM NUMBER	

Seal	
CHEEFT NUMBER	8615
OEM NUMBER	93161257

ORIGINAL PART NUMBERS,MARKS AND MODELS MENTIONED ARE ONLY FOR DESCRIPTION PURPOSES.

COHEEFT®

AIR DISC BRAKE CALIPER REPAIR KITS

IVECO

410 SIMPLEX SERIES

IVECO

Always the Best...

EAC CE UDEM JAS-ANZ ISO 9001 2015

410 SIMPLEX SERIES

CHEEFT NUMBER	8670

Brake Adjusting Repair Kit (Thin Teeth)

OEM NUMBER	

NR	CHEEFT NR	DESCRIPTIONS	DIMENSION	QTY
1	8601	ADJUSTING BOLT		2
2	8608	ADJUSTING BOLT SLEEVE (THIN TEETH)		2
3	8786	BRAKE HOLDER	Ø38,50 mm	2
4	8650	SCREW (THIN TEETH)	22 mm	2
5	8613	SEAL		2
6	8602	SPRING		1
7	8605	SPRING		1

CHEEFT NUMBER	8642

Brake Repair Kit (Thin Teeth)

OEM NUMBER	

NR	CHEEFT NR	DESCRIPTIONS	DIMENSION	QTY
1	8601	BRAKE ADJUSTING BOLT		4
2	8608	ADJUSTING BOLT SLEEVE (THIN TEETH)		4
3	8650	SCREW (THIN TEETH)	22 mm	4
4	8613	SEAL		4

CHEEFT NUMBER	8641

Brake Adjusting Bolt & Bush Kit (Thin Teeth)

OEM NUMBER	

NR	CHEEFT NR	DESCRIPTIONS	DIMENSION	QTY
1	8601	BRAKE ADJUSTING BOLT		1
2	8608	ADJUSTING BOLT SLEEVE (THIN TEETH)		1
3	8786	BRAKE HOLDER	Ø38,50 mm	1

IVECO

ORIGINAL PART NUMBERS,MARKS AND MODELS MENTIONED ARE ONLY FOR DESCRIPTION PURPOSES.

410 SIMPLEX SERIES

CHEEFT NUMBER	8682

Brake Adjusting Bolt & Bush (Thin Teeth)

OEM NUMBER	42531676

NR	CHEEFT NR	DESCRIPTIONS	DIMENSION	QTY
1	8601	ADJUSTING BOLT		1
2	8608	ADJUSTING BOLT SLEEVE (THIN TEETH)		1

CHEEFT NUMBER	8656

Brake Plunger Kit Right (New Model)

OEM NUMBER	MRT RBSK1599.M - RBSK1606.M IVECO 42537363 - 42537365

NR	CHEEFT NR	DESCRIPTIONS	DIMENSION	QTY
1	8640	PLUNGER (RIGHT)	Ø38,50 mm	2
2	8637	SCREW	22 mm	2
3	8616	SEAL		2

CHEEFT NUMBER	8655

Brake Plunger Kit Left (New Model)

OEM NUMBER	MRT RBSK1600.M - RBSK1607.M IVECO 42537364 - 42537366

NR	CHEEFT NR	DESCRIPTIONS	DIMENSION	QTY
1	8639	PLUNGER (LEFT)	Ø38,50 mm	2
2	8637	SCREW	22 mm	2
3	8616	SEAL		2

ORIGINAL PART NUMBERS,MARKS AND MODELS MENTIONED ARE ONLY FOR DESCRIPTION PURPOSES.

410 SIMPLEX SERIES

CHEEFT NUMBER	8659

Seal Kit

OEM NUMBER	93161625

NR	CHEEFT NR	DESCRIPTIONS	DIMENSION	QTY
1	8613	SEAL		4

CHEEFT NUMBER	8646

Seal Kit

OEM NUMBER	42536193

NR	CHEEFT NR	DESCRIPTIONS	DIMENSION	QTY
1	8613	SEAL		4
2	8616	SEAL		4

CHEEFT NUMBER	8664

Brake Adjusting Wedge Kit

OEM NUMBER	DF 1258802 - IVECO 42536194 - 42537942 93161621 - MRT RBSK1255.M - RBSK1573.M RBSK2051.M

NR	CHEEFT NR	DESCRIPTIONS	DIMENSION	QTY
1	8623	BRAKE ADJUSTING WEDGE		2

IVECO

ORIGINAL PART NUMBERS,MARKS AND MODELS MENTIONED ARE ONLY FOR DESCRIPTION PURPOSES.

410 SIMPLEX SERIES

Brake Adjusting Wedge	
CHEEFT NUMBER	8623
OEM NUMBER	DF 1258802 IVECO 42536194 - 42537942 - 93161621 MRT RBSK1255.M - RBSK1573.M - RBSK2051.M

Seal	
CHEEFT NUMBER	8613
OEM NUMBER	MN 8600569 - IVECO 42531677 MRT 1205X2000 - VLV 1698588 NSSN 69026590 - FORD 6C462B009AA

Seal	
CHEEFT NUMBER	8616
OEM NUMBER	MRT 1205E2683 - FORD 6C462B009BA IVECO 42537841

Brake Adjusting Bolt	
CHEEFT NUMBER	8601
OEM NUMBER	MRT A2297S8287 - A22297E5907 IVECO 42531676 - 42537758

Clamp	
CHEEFT NUMBER	8675
OEM NUMBER	

IVECO

ORIGINAL PART NUMBERS,MARKS AND MODELS MENTIONED ARE ONLY FOR DESCRIPTION PURPOSES.

410 SIMPLEX SERIES

CHEEFT NUMBER	8684

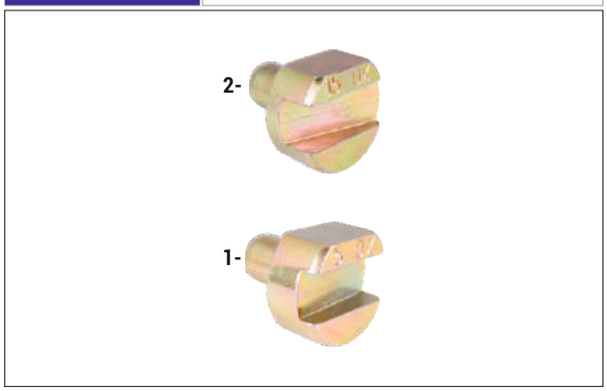

Pinion Bolt Kit (Right)

OEM NUMBER	

NR	CHEEFT NR	DESCRIPTIONS	DIMENSION	QTY
1	8662	PINION BOLT LEFT 5° DX		1
2	8672	PINION BOLT LEFT 15° DX		1

CHEEFT NUMBER	8683

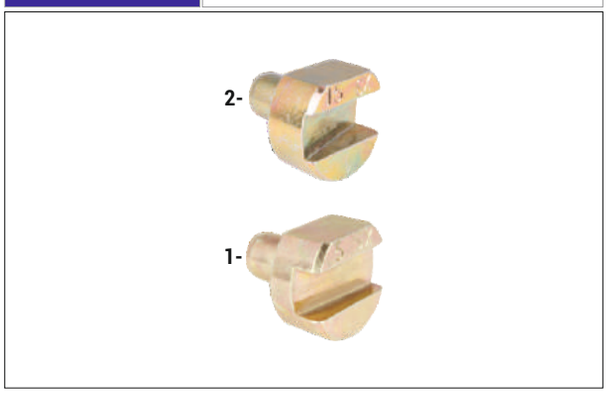

Pinion Bolt Kit (Left)

OEM NUMBER	

NR	CHEEFT NR	DESCRIPTIONS	DIMENSION	QTY
1	8661	PINION BOLT LEFT 5° SX		1
2	8671	PINION BOLT LEFT 15° SX		1

Screw 22 mm (Thin Teeth)

CHEEFT NUMBER	8650
OEM NUMBER	

IVECO

ORIGINAL PART NUMBERS,MARKS AND MODELS MENTIONED ARE ONLY FOR DESCRIPTION PURPOSES.

410 SIMPLEX SERIES

Pinion Bolt Left 15° SX	
CHEEFT NUMBER	8671
OEM NUMBER	IVECO 93161863

Pinion Bolt Right 15° DX	
CHEEFT NUMBER	8672
OEM NUMBER	

Pinion Bolt Left 5° SX	
CHEEFT NUMBER	8661
OEM NUMBER	IVECO 93161863

Pinion Bolt Right 5° DX	
CHEEFT NUMBER	8662
OEM NUMBER	IVECO 93161864

Screw (22 mm)	
CHEEFT NUMBER	8637
OEM NUMBER	MRT A12297S8287 - FORD 6C462A105AB

IVECO

ORIGINAL PART NUMBERS,MARKS AND MODELS MENTIONED ARE ONLY FOR DESCRIPTION PURPOSES.

410 SIMPLEX SERIES

CHEEFT NUMBER	8619

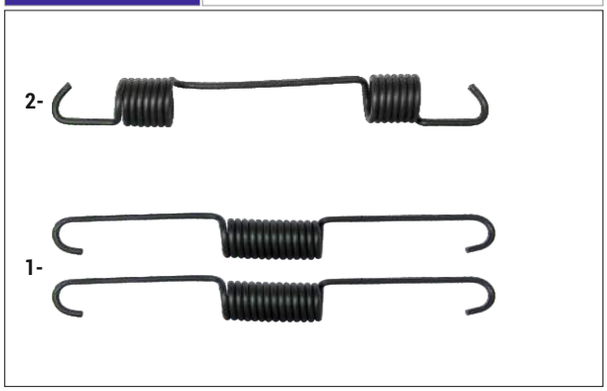

NR	CHEEFT NR	DESCRIPTIONS	DIMENSION	QTY
1	8605	BRAKE SHOE RETURN SPRING		2
2	8602	BRAKE SHOE RETURN SPRING		1

Spring Kit

OEM NUMBER	MRT RBSK2128.M IVECO 93161627 - 93162113

CHEEFT NUMBER	8631

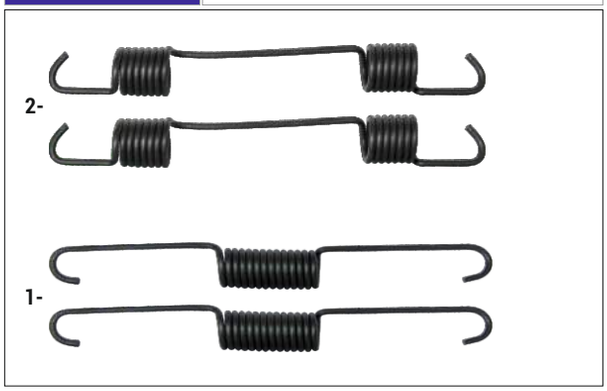

NR	CHEEFT NR	DESCRIPTIONS	DIMENSION	QTY
1	8605	BRAKE SHOE RETURN SPRING		2
2	8602	BRAKE SHOE RETURN SPRING		2

Spring Kit

OEM NUMBER	93161627 - 93162113

Brake Shoe Return Spring

CHEEFT NUMBER	8605
OEM NUMBER	MRT 2258F1306

IVECO

ORIGINAL PART NUMBERS,MARKS AND MODELS MENTIONED ARE ONLY FOR DESCRIPTION PURPOSES.

410 SIMPLEX SERIES

Adjusting Bolt Sleeve (Thin Teeth)	
CHEEFT NUMBER	8608
OEM NUMBER	

Brake Holder (Ø38,50 mm)	
CHEEFT NUMBER	8786
OEM NUMBER	MRT 3280W8369 - FORD 6C462A170CA

Plunger Ø38,50 mm (Left)	
CHEEFT NUMBER	8639
OEM NUMBER	MRT 2297H8354 - IVECO 42537364 FORD 6C462A170BA

Plunger Ø38,50 mm (Right)	
CHEEFT NUMBER	8640
OEM NUMBER	MRT 2297J8356 - IVECO 42537365 FORD 6C462A170AA

Grooved Nut (Long)	
CHEEFT NUMBER	8647
OEM NUMBER	

IVECO

ORIGINAL PART NUMBERS,MARKS AND MODELS MENTIONED ARE ONLY FOR DESCRIPTION PURPOSES.

C-HEEFT®
AIR DISC BRAKE CALIPER REPAIR KITS

Z-CAM

Z-CAM

Always the Best...

EAC CE UDEM JAS-ANZ ISO 9001 2015

C-HEEFT®

AIR DISC BRAKE CALIPER REPAIR KITS

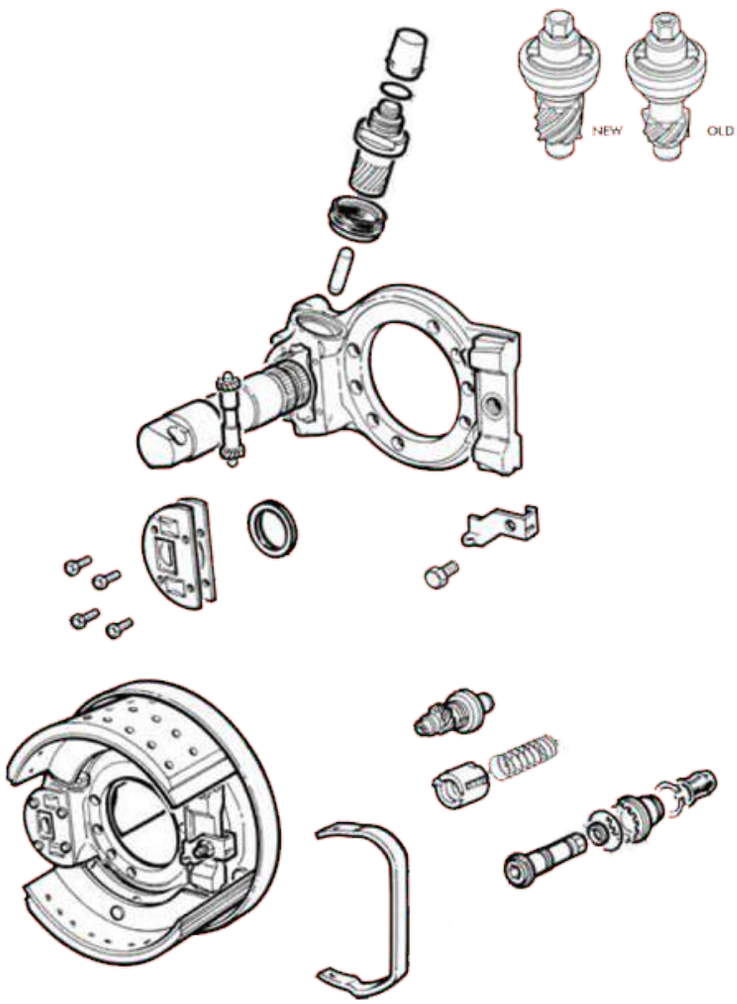

Z-CAM

Always the Best...

Z-CAM

EAC CE UDEM JAS-ANZ ISO 9001 2015

Z-CAM

Pinion Set (With Spring - Right) New Model

CHEEFT NUMBER	9009
OEM NUMBER	Z-CAM 1607502 - MRT 68020146 RNLT 5006 046 766

Pinion Set (With Spring- Left) Old Model

CHEEFT NUMBER	9010
OEM NUMBER	Z-CAM 1081820 - 3090998 - MRT ST1039 MN 1428758 - N2509996051

Pinion Set (With Spring - Right) Old Model

CHEEFT NUMBER	9008
OEM NUMBER	Z-CAM 1081820 - 3090998 - MRT ST1039 MN 1428758 - N2509996051

Pinion Set (With Spring - Left) Old Model

CHEEFT NUMBER	9007
OEM NUMBER	Z-CAM 1081819 - 3090997 - MN 1428741 MRT ST1038

Mechanism Adjuster Shaft

CHEEFT NUMBER	9016
OEM NUMBER	IVECO 3346433R1 MN 1336791 - N2509990127 MRT 68191930 - DNNS 61385917 BMC 9P901234 - FORD 9C462C200AA RVI 5006 018 450

ORIGINAL PART NUMBERS,MARKS AND MODELS MENTIONED ARE ONLY FOR DESCRIPTION PURPOSES.

Z-CAM

Pinion Set (Left) New Model	
CHEEFT NUMBER	9003
OEM NUMBER	Z-CAM 1696924 MB 89200340793 - 1892003407931 MN 1350884 - 8605966 - N2509990129 DF 1694793 - IVECO 3346448R1 MRT 68191510 - A164052 - RNLT 5001 868 125 5006 018 474 -PCCR TP02006095 DNNS 61385929 - 65399625 LYLND XBU0684 - FORD 9C462K1

Pinion Set (Right) New Model	
CHEEFT NUMBER	9004
OEM NUMBER	Z-CAM 1696925 - DF 1694794 MB 89200340794 - 1892003407941 MN 1350890 - 8605967 - N2509990131 IVECO 3346447R1 - 3346449R1 MRT 68191511 - A164055 - RNLT 5001 868 126 PCCR TP02006096 DNNS 6138606 - 6539963 - 6539975 LYLND XBU0685 - FORD 9C

Pinion Set (Short - Left) Old Model	
CHEEFT NUMBER	9005
OEM NUMBER	Z-CAM 1696924 MB 89200340793 - 1892003407931 DF 1694793 - MN 1350884 - 8605966 N2509990129 - FORD 9C462K IVECO 3346448R1 - MRT 68191510 - A164052 RNLT 5001 868 125 - 5006 018 474 PCCR TP02006095 - DNNS 61385929 65399625 - LYLND XBU0684

Pinion Set (Short - Right) Old Model	
CHEEFT NUMBER	9006
OEM NUMBER	Z-CAM 1696925 MB 89200340794 - 1892003407941 MN 1350890 - 8605967 - N2509990131 DF 1694794 - IVECO 3346447R1 - 3346449R1 MRT 68191511 - A164055 - RNLT 5001 868 126 PCCR TP02006096 - DNNS 6138606 - 6539963 6539975 - LYLND XBU0685 - FORD 9C

Brake Adjusting Cross Shaft	
CHEEFT NUMBER	9011
OEM NUMBER	Z-CAM 272910 MB 1892003407351 - MN 1422829 - 8603403 N2509996050 - DF 1694368 - IVECO 3346443R91 MRT 68191219 - ST4018 - SP8540 RNLT 5001 868 121 - 5006 018 458 DNNS 6138597 - 65399621 - 1696453 3098271 - FORD 9C462458AA - AWD A4027696

ORIGINAL PART NUMBERS,MARKS AND MODELS MENTIONED ARE ONLY FOR DESCRIPTION PURPOSES.

Z-CAM

Brake Adjusting Pin

CHEEFT NUMBER	9017
OEM NUMBER	Z-CAM 1696446 - MB 1892003407251 MN 8603393 - N2970060001 - DF 1694355 IVECO 16352S1 - MRT 64225252 - 137074 RNLT 5001 868 120 - 5006 018 440 PCCR AAU6457 - DNNS 6138599 - 60889335 61049727 - RB 665152 - FORD 9C462B003AA

Brake Adjusting Pin

CHEEFT NUMBER	9019
OEM NUMBER	Z-CAM 1696445 - 1698346 - 3097299 MRT 68192487 - 68200150 - 137075 FORD 9C462069AA

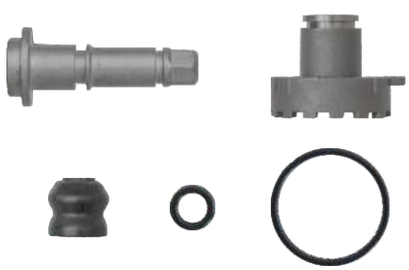

Brake Adjusting Pin Kit (Wide Teeth)

CHEEFT NUMBER	9021
OEM NUMBER	Z-CAM 276099 - MN 2068777 - 8604735 85.500.013.424 - MRT ST1034

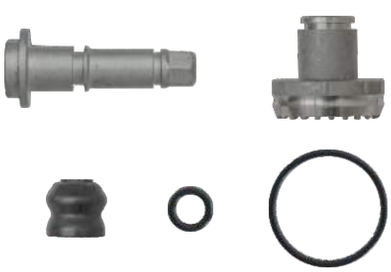

Brake Adjusting Pin Kit (Thin Teeth)

CHEEFT NUMBER	9022
OEM NUMBER	Z-CAM 276100 - MN 1341829 - 8701361 N2509996037 - DF 1694364 - IVECO 42540290 3346439R91 - MRT ST1035 - ST4022 RNLT 7403 090 964 - PCCR TP02006093 ZF 0501210721 - DNNS 61385915 65399615 - 3090964 - 3098275 AWD A4027698

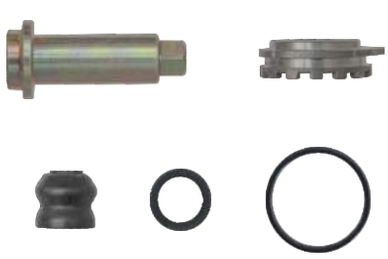

Brake Adjusting Pin Set

CHEEFT NUMBER	9020
OEM NUMBER	Z-CAM 276096 - MN 1449350 - MRT ST1033 PCCR TP02006268

ORIGINAL PART NUMBERS,MARKS AND MODELS MENTIONED ARE ONLY FOR DESCRIPTION PURPOSES.

Z-CAM

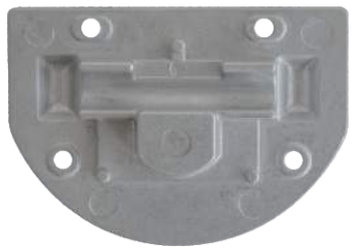

Brake Adjuster Aluminium Dust Cover

CHEEFT NUMBER	9015
OEM NUMBER	Z-CAM 1696449 - MN 1321228 - 8603384 N2900000084 - N2900000152 - DF 1694347 IVECO 3346423R1 - MRT 68191065 - 166062 RNLT 5001 868 127 - 5006 018 435 DNNS 6138593 - 6539967 - RB 665145 BMC 9P901178 - FORD 9C462213AA AWD A4027680

Brake Adjuster Dust Cover

CHEEFT NUMBER	9012
OEM NUMBER	Z-CAM 1696450 - MN 1321234 - 8603385 N2966010119 - DF 1694348 IVECO 5001 868 122 - 5006 018 436 MRT 68191066 - 166063 - DNNS 6138594 6539968 - 65356315 - LYLND XBU0889 FORD 9C462B032AA

Brake Mechanism Dust Cover

CHEEFT NUMBER	9018
OEM NUMBER	Z-CAM 1696448 - 3090954 - MB 89200340815 MN 8701359 - 1427340 - N2509990143 DF 1694354 - IVECO 42540274 - 3346430R91 AWD A4027686 - MRT 68192410 PCCR TP08023002 - ZF 0501316391 DNNS 61385910 - 65399614 - 65399620 RB 665151 - FORD 9C462B009AA

Caliper Calibration C Spring

CHEEFT NUMBER	9023
OEM NUMBER	Z-CAM 1696444 - MB 1892003407951 MN 1398023 - 8607130 - N2900000088 DF 1694362 - IVECO 3346437R1 - MRT 68192115 167090 - RNLT 5001 868 113 - 5006 018 480 DNNS 61385919 - 65399619 - RB 665153 3097092 - BMC 9P901265 - FORD 9C462296AA

ORIGINAL PART NUMBERS,MARKS AND MODELS MENTIONED ARE ONLY FOR DESCRIPTION PURPOSES.

Z-CAM

Brake Mechanism (Left)	
CHEEFT NUMBER	9002
OEM NUMBER	MB 1892003407231 - MN 1494055 - 8603391 2509996057 - DF 1694352 - IVECO 3346429R91 3348783R91 - MRT 68192565 - A164061 ST4014 - ST4023 - RNLT 5001 868 118 5006 018 43 - PCCR PPMST4014 ZF 0501210719 - DNNS 61385913 65399613 - RAB

Brake Mechanism (Right)	
CHEEFT NUMBER	9001
OEM NUMBER	Z-CAM 272908 - 30971 - MB 1892003407221 MN 1472809 - 8603390 - N2509996054 DF 1694353 - IVECO 3348784R91 MRT 68192566 - A164062 - ST4013 - ST4024 RNLT 5001 868 117 - 5006 018 437 PCCR PPMST4013 - DNNS 61385911 65399612 - LYLND XBU0911

Brake Lock Set (Right)	
CHEEFT NUMBER	9013
OEM NUMBER	Z-CAM 276098 - MB 1892003407911 MN 1386099 - 8604737 - N2509996047 DF 1694366 - IVECO 3346441R91 MRT 68191541 - ST1037 - ST4020 RNLT 7400 276 098 - DNNS 6138604 6539973 - 3098273 - BMC 9P910412 FORD 9C462K400BA - AWD A4027699

Brake Lock Set (Left)	
CHEEFT NUMBER	9014
OEM NUMBER	Z-CAM 276097 - 3098274 - MN 1336762 8604736 - N2509996035 - DF 1694365 IVECO 3346440R91 - MRT 68191540 - ST1036 ST4021 - RNLT 7400 276 097 PCCR TP02006094 - DNNS 61385928 65399617 - BMC 9P910411 FORD 9C462K400AA - AWD A4027706

ORIGINAL PART NUMBERS,MARKS AND MODELS MENTIONED ARE ONLY FOR DESCRIPTION PURPOSES.

COHEEFT®
AIR DISC BRAKE CALIPER REPAIR KITS

SENSOR

KNR SENSOR CONNECTION CABLES

SENSOR CABLES

Always the Best...

EAC CE UDEM JAS-ANZ ISO 9001 2015

KNR SENSOR CONNECTION CABLES

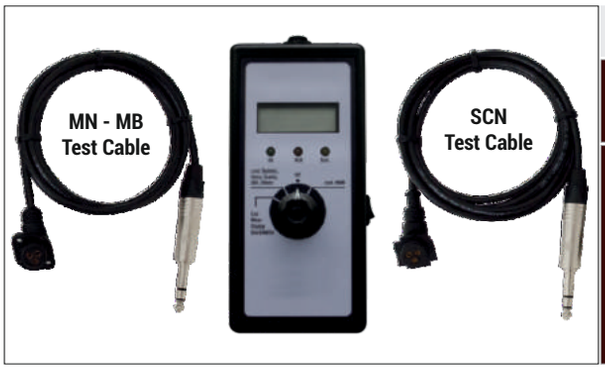

KNR Sensor Testing Device	
CHEEFT NUMBER	1453
OEM NUMBER	

Sensor Cable With Connector Socket (2,0 Mt)	
CHEEFT NUMBER	1401
OEM NUMBER	449 756 0200

Sensor Cable With Connector Socket (3,5 m)	
CHEEFT NUMBER	1402
OEM NUMBER	449 756 0350

Sensor Cable with Connector Socket (5,0 Mt)	
CHEEFT NUMBER	1403
OEM NUMBER	

Sensor Cable With Connector Socket (8,0 m)	
CHEEFT NUMBER	1404
OEM NUMBER	

ORIGINAL PART NUMBERS,MARKS AND MODELS MENTIONED ARE ONLY FOR DESCRIPTION PURPOSES.

KNR SENSOR CONNECTION CABLES

Sensor Cable With Connector Socket (12,0 m)	
CHEEFT NUMBER	1406
OEM NUMBER	

Sensor Cable With Connector Socket (1,0 m)	
CHEEFT NUMBER	1407
OEM NUMBER	

Sensor Cable with Connector Socket (2,0 Mt)	
CHEEFT NUMBER	1412
OEM NUMBER	

Sensor Cable with Connector Socket (1,5 Mt)	
CHEEFT NUMBER	1415
OEM NUMBER	1884529

ORIGINAL PART NUMBERS,MARKS AND MODELS MENTIONED ARE ONLY FOR DESCRIPTION PURPOSES.

COHEEFT®
AIR DISC BRAKE CALIPER REPAIR KITS

SENSOR

MRT SENSOR CONNECTION CABLES

SENSOR CABLES

Always the Best...

EAC CE UDEM JAS-ANZ ISO 9001 2015

COHEEFT®
AIR DISC BRAKE CALIPER REPAIR KITS

SENSOR

MRT SENSOR CONNECTION CABLES

SENSOR CABLES

Always the Best...

EAC CE UDEM JAS-ANZ ISO 9001 2015

MRT SENSOR CONNECTION CABLES

Pad Wear Indicator (Front-Right)	
CHEEFT NUMBER	2402
OEM NUMBER	RNLT 5001 856 032

Pad Wear Indicator (Rear-Right)	
CHEEFT NUMBER	2403
OEM NUMBER	RNLT 5001 856 034

Pad Wear Indicator (Front-Left)	
CHEEFT NUMBER	2404
OEM NUMBER	RNLT 5001 856 031

Pad Wear Indicator (Rear-Left)	
CHEEFT NUMBER	2405
OEM NUMBER	RNLT 5001 856 033

Pad Wear Indicator (Front-Right)	
CHEEFT NUMBER	2406
OEM NUMBER	RNLT 7420 928 560

ORIGINAL PART NUMBERS,MARKS AND MODELS MENTIONED ARE ONLY FOR DESCRIPTION PURPOSES.

MRT SENSOR CONNECTION CABLES

Pad Wear Indicator (Rear-Right)	
CHEEFT NUMBER	2407
OEM NUMBER	RNLT 7420 928 553

Pad Wear Indicator (Front-Left)	
CHEEFT NUMBER	2408
OEM NUMBER	RNLT 7420 928 559

Pad Wear Indicator (Rear-Left)	
CHEEFT NUMBER	2409
OEM NUMBER	RNLT 7420 928 552

Pad Wear Indicator (Front)	
CHEEFT NUMBER	2410
OEM NUMBER	VLV 20928533

Pad Wear Indicator (Rear)	
CHEEFT NUMBER	2411
OEM NUMBER	VLV 20928532

ORIGINAL PART NUMBERS,MARKS AND MODELS MENTIONED ARE ONLY FOR DESCRIPTION PURPOSES.

MRT SENSOR CONNECTION CABLES

Pad Wear Indicator (Front-Left/Right)	
CHEEFT NUMBER	2412
OEM NUMBER	MN 81.25937.6015

Pad Wear Indicator (Rear-Left)	
CHEEFT NUMBER	2413
OEM NUMBER	MN 81.25937.6041

Pad Wear Indicator (Rear-Right)	
CHEEFT NUMBER	2414
OEM NUMBER	MN 81.25937.6044

Pad Wear Indicator	
CHEEFT NUMBER	2416
OEM NUMBER	VLV 21390374

Pad Wear Indicator	
CHEEFT NUMBER	2417
OEM NUMBER	VLV 21390375

ORIGINAL PART NUMBERS,MARKS AND MODELS MENTIONED ARE ONLY FOR DESCRIPTION PURPOSES.

MRT SENSOR CONNECTION CABLES

Pad Wear Indicator	
CHEEFT NUMBER	2418
OEM NUMBER	

Pad Wear Indicator	
CHEEFT NUMBER	2419
OEM NUMBER	VLV 21390372 - 20928356

Pad Wear Indicator	
CHEEFT NUMBER	2420
OEM NUMBER	VLV 21390373 - 20928537

Pad Wear Indicator	
CHEEFT NUMBER	2422
OEM NUMBER	VLV 20928548

Pad Wear Indicator	
CHEEFT NUMBER	2423
OEM NUMBER	VLV 20928563

ORIGINAL PART NUMBERS,MARKS AND MODELS MENTIONED ARE ONLY FOR DESCRIPTION PURPOSES.

MRT SENSOR CONNECTION CABLES

Pad Wear Indicator	
CHEEFT NUMBER	2424
OEM NUMBER	VLV 20928564

ORIGINAL PART NUMBERS,MARKS AND MODELS MENTIONED ARE ONLY FOR DESCRIPTION PURPOSES.

COHEEFT®
AIR DISC BRAKE CALIPER REPAIR KITS

CARRIERS

KNR CALIPER CARRIERS

Always the Best...

CARRIERS & BOLT

KNR CALIPER CARRIERS

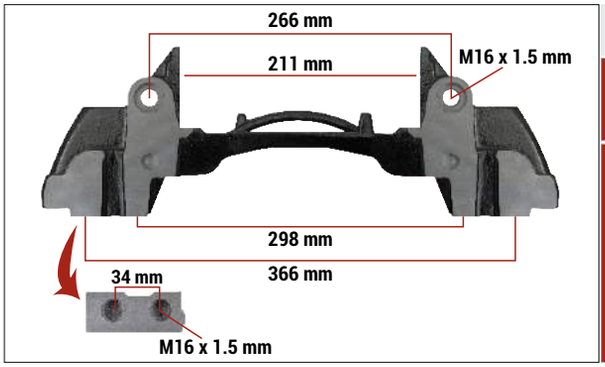

KNR 22,5 Inch B.V Type Caliper Carrier

CHEEFT NUMBER	1211
OEM NUMBER	K012619 - Z006715 - SCN 2379697 B.V 01.303.88.56.0 - B.V Trailer Axle

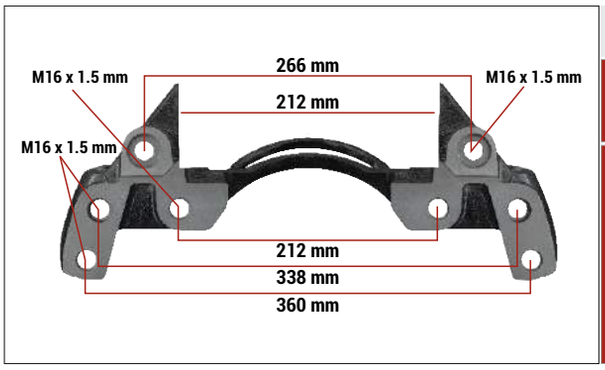

KNR TKR Bus 19,5 Inch Caliper Carrier

CHEEFT NUMBER	1212
OEM NUMBER	

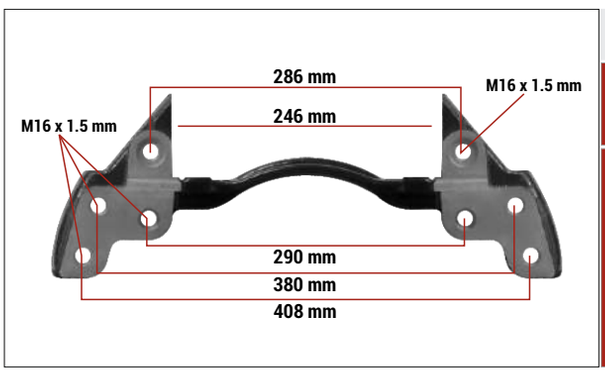

KNR Conecto Bus 22,5 Inch Caliper Carrier (Right-Left)

CHEEFT NUMBER	1213
OEM NUMBER	KNR L-K001529 / R-K001530 MB L-000 421 3706 / R-000 421 3806 (Right-Left) - MB BUS CONNECTO

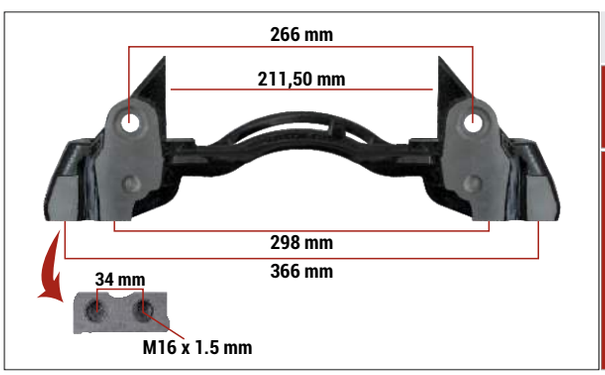

KNR B.V Type 2 Hole 19,5 Inch Caliper Carrier (Right-Left)

CHEEFT NUMBER	1214
OEM NUMBER	KNR K004679 - SCN 2379695 B.V 01.303.88.55.0 - B.V Trailer Axle

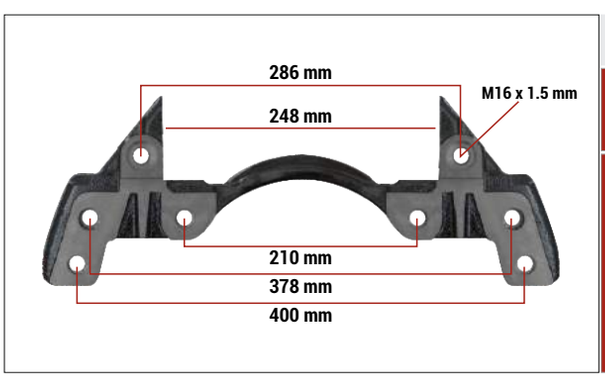

KNR Actrs & AXR 22,5 Inch Caliper Carrier (Right-Left)

CHEEFT NUMBER	1215
OEM NUMBER	KNR K000026 - Z007541 - MB 000 421 1106 SCN 2121591 - MB AXR

ORIGINAL PART NUMBERS,MARKS AND MODELS MENTIONED ARE ONLY FOR DESCRIPTION PURPOSES.

KNR CALIPER CARRIERS

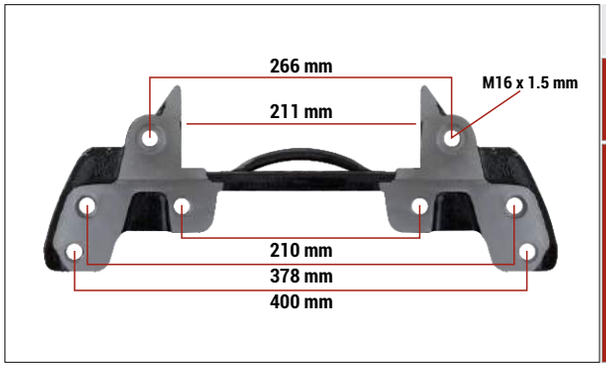

KNR 22,5 Inch SK7 Caliper Carrier

CHEEFT NUMBER	1220
OEM NUMBER	KNR K004099 - SCN 2121600 SF 3 080 0054 01 - 3 080 0055 01 SF Trailer Axle

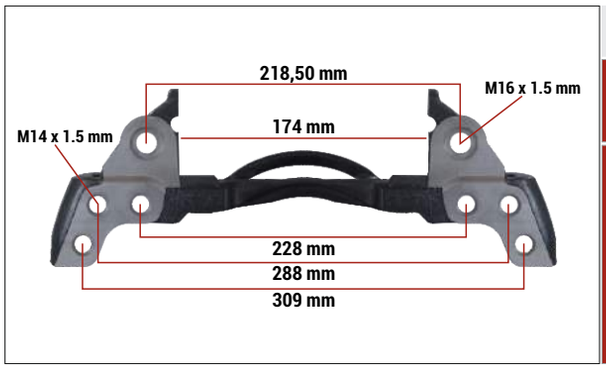

12-160 TGL MN 17,5 Inch Caliper Carrier (Right-Left)

CHEEFT NUMBER	1221
OEM NUMBER	K005606

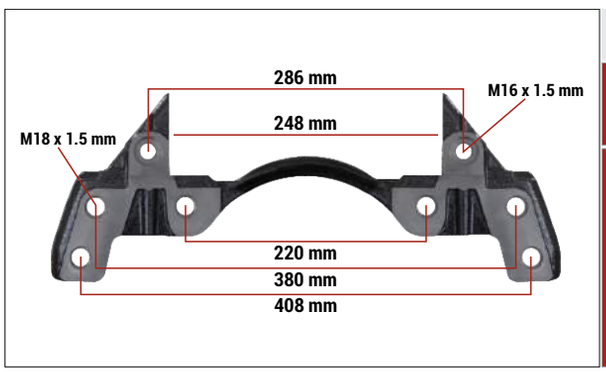

MN TGA 22,5 Inch Caliper Carrier

CHEEFT NUMBER	1228
OEM NUMBER	KNR K001278 - MN TRUCK TGA

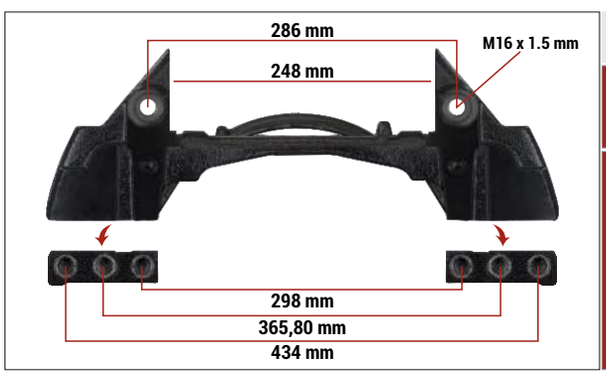

KNR 22,5 Inch B.V Type Caliper Carrier

CHEEFT NUMBER	1229
OEM NUMBER	KNR K004680 - SCN 2379696 B.V 01.303.88.57.0 - B.V Trailer Axle

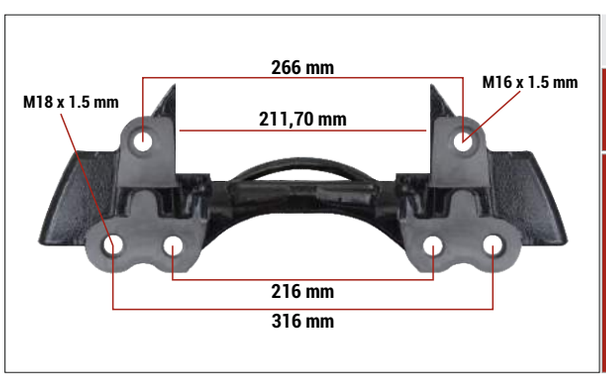

KNR 22,5 Inch Caliper Carrier (For SF Trailer)

CHEEFT NUMBER	1230
OEM NUMBER	KNR K015308 - Z019050 - SF 3 080 0059 00 3 080 0060 00 - SF Trailer Axle

ORIGINAL PART NUMBERS,MARKS AND MODELS MENTIONED ARE ONLY FOR DESCRIPTION PURPOSES.

KNR CALIPER CARRIERS

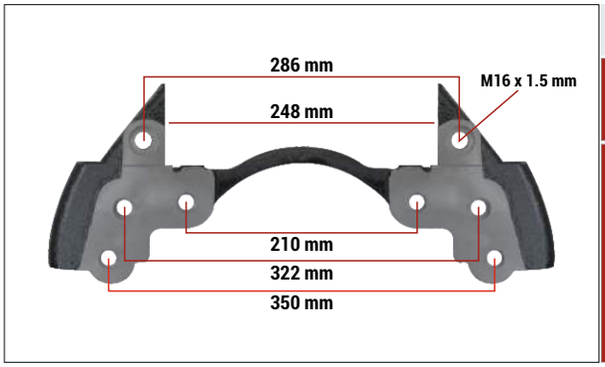

KNR 22,5 Inch Caliper Carrier

CHEEFT NUMBER	1231
OEM NUMBER	KNR K000027 - Z006582 - MB 000 423 0606 SCN 2121592 - MB ACTRS

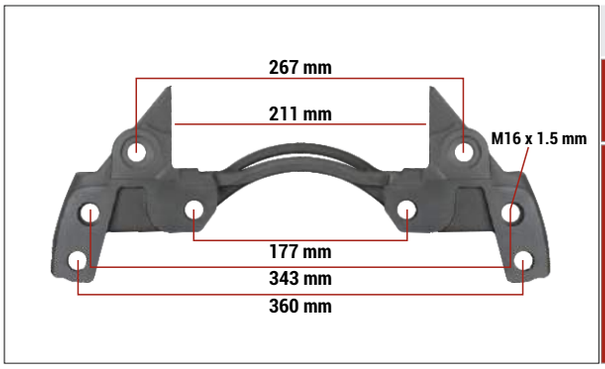

KNR 19,5 Inch ATG Caliper Carrier

CHEEFT NUMBER	1232
OEM NUMBER	KNR Z000702 - K001926 - MB 000 421 3106 MB ATG

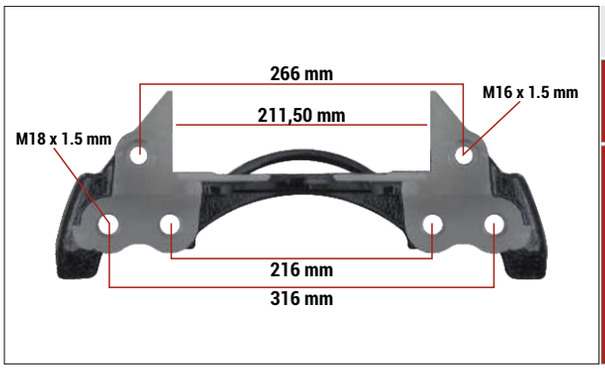

KNR Caliper Carrier 19,5 Inch (Right-Left)

CHEEFT NUMBER	1233
OEM NUMBER	KNR Z019053 - SF - JUMBO

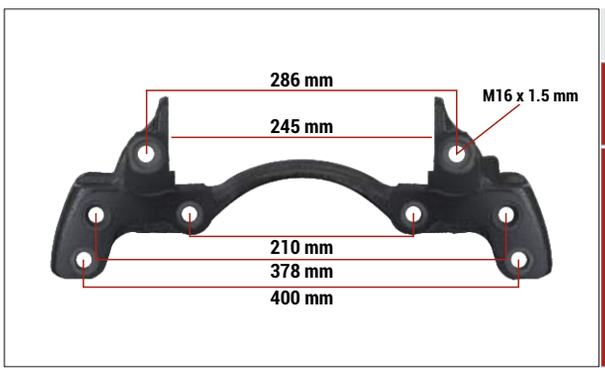

KNR Caliper Carrier 22,5 Inch (Right-Left)

CHEEFT NUMBER	1234
OEM NUMBER	KNR Z046338 - MB 4140 FRONT

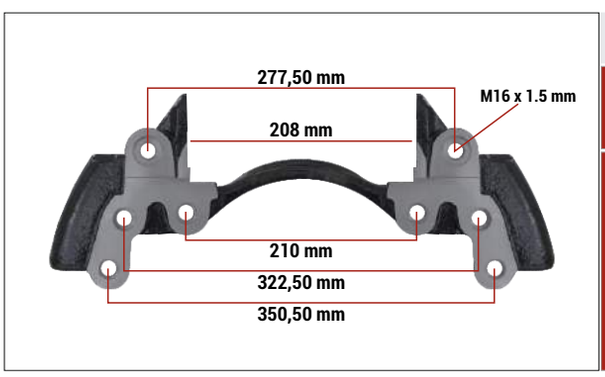

KNR Caliper Carrier 22,5 Inch (Right-Left)

CHEEFT NUMBER	1235
OEM NUMBER	KNR K052379K50 - Z025197 MB 000 423 1006 - MB 4140 REAR

ORIGINAL PART NUMBERS,MARKS AND MODELS MENTIONED ARE ONLY FOR DESCRIPTION PURPOSES.

KNR CALIPER CARRIERS

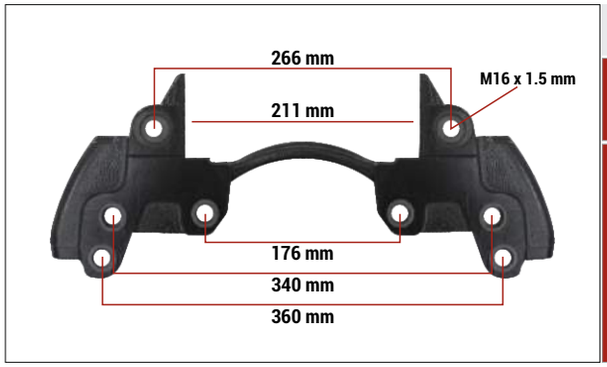

KNR Caliper Carrier 19,5 Inch (Right-Left)

CHEEFT NUMBER	1236
OEM NUMBER	KNR Z017557 - MB AXR

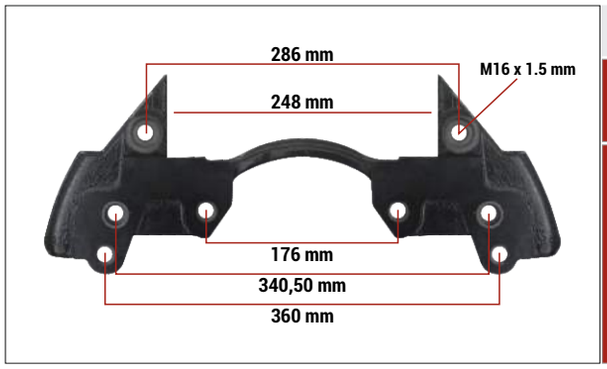

KNR Caliper Carrier 22,5 Inch (Right-Left)

CHEEFT NUMBER	1237
OEM NUMBER	MB TRAILER AXLE

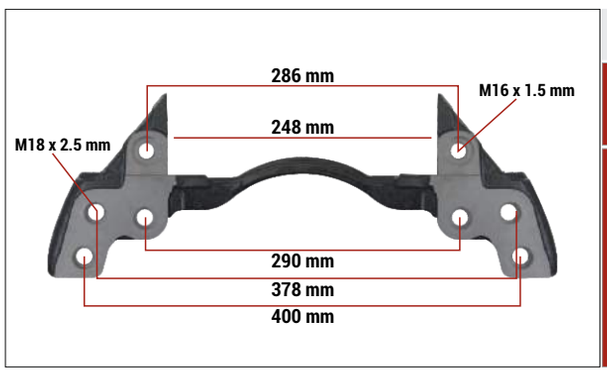

KNR Caliper Carrier 22,5 Inch (Right-Left)

CHEEFT NUMBER	1238
OEM NUMBER	

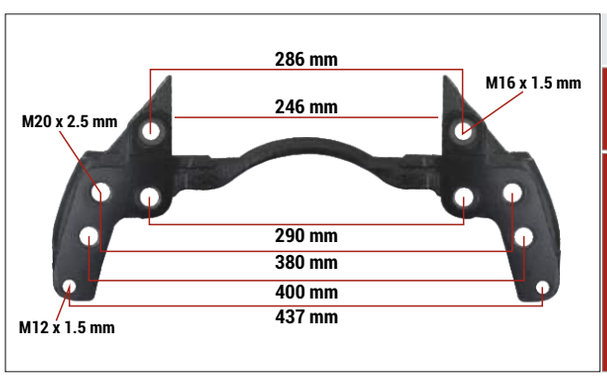

KNR Caliper Carrier 22,5 Inch SCN Old Model (Right-Left)

CHEEFT NUMBER	1239
OEM NUMBER	KNR K010765 - 1756388

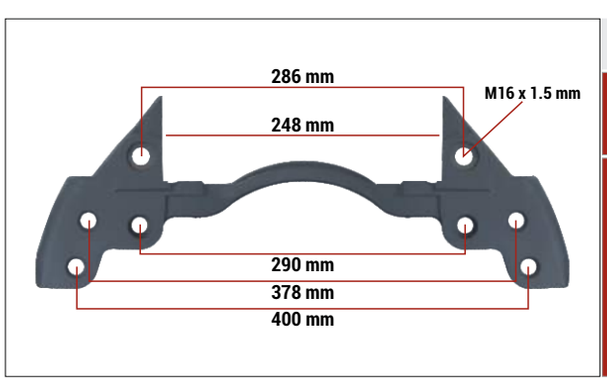

KNR Caliper Carrier 22,5 Inch (Right-Left)

CHEEFT NUMBER	1240
OEM NUMBER	KNR K001337 - KNR SN7138 - DF 1612741

ORIGINAL PART NUMBERS,MARKS AND MODELS MENTIONED ARE ONLY FOR DESCRIPTION PURPOSES.

KNR CALIPER CARRIERS

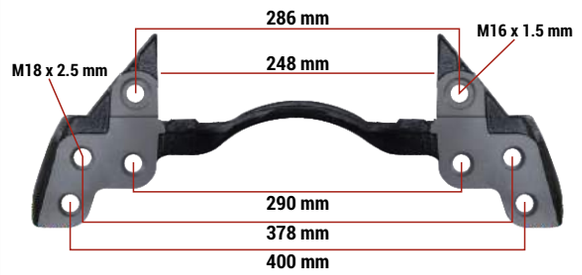

KNR Caliper Carrier 22,5 Inch DF (Right-Left)

CHEEFT NUMBER	1241
OEM NUMBER	KNR K011479 - 1689314 - Z006590 DF LF 55 IV - DF 75 CF / 85 CF - DF CF 65 II / IV DF CF 75 IV - DF CF 85 IV - DF XF 95 DF XF 105

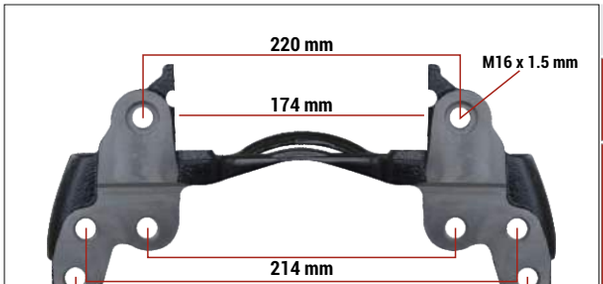

KNR 17,5 Inch Caliper Carrier (Right-Left)

CHEEFT NUMBER	1243
OEM NUMBER	K001927 - MB 000 421 3006 - SCN 2121599

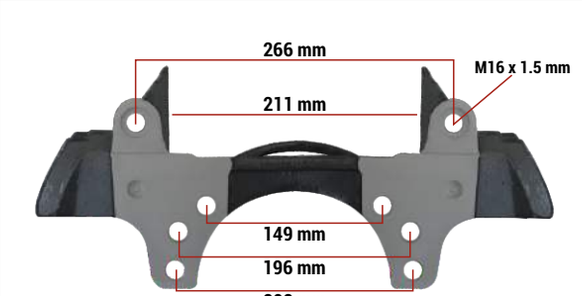

Caliper Carrier Schmitz Trailer KNR Type

CHEEFT NUMBER	1244
OEM NUMBER	K007475 - Z000968

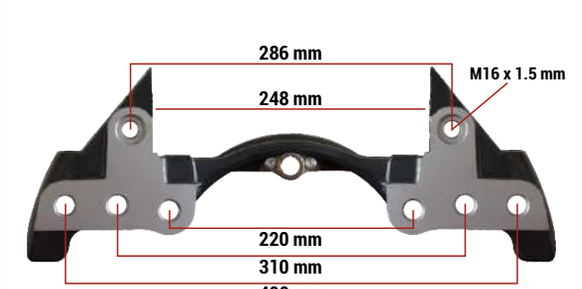

Caliper Carrier For B.V Axle

CHEEFT NUMBER	1245
OEM NUMBER	K001505

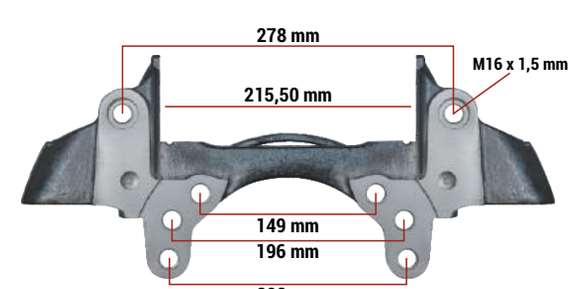

Caliper Carrier For Schmitz Trailer

CHEEFT NUMBER	1248
OEM NUMBER	K108001K50

ORIGINAL PART NUMBERS,MARKS AND MODELS MENTIONED ARE ONLY FOR DESCRIPTION PURPOSES.

KNR CALIPER CARRIERS

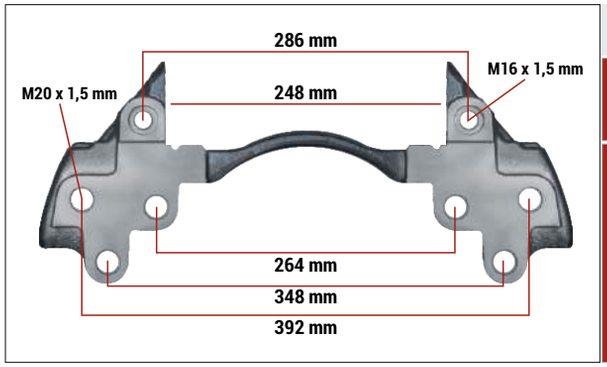

Caliper Carrier For Iveco Truck

CHEEFT NUMBER	1251
OEM NUMBER	K108814K50 - K001510

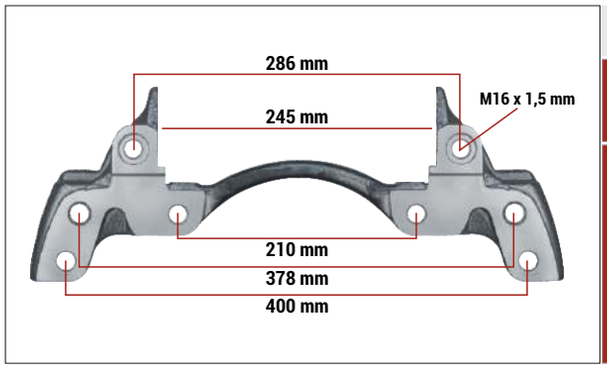

Caliper Carrier MB 4140 - Front (New Model)

CHEEFT NUMBER	1254
OEM NUMBER	K046498K50 - MB 000 421 5706

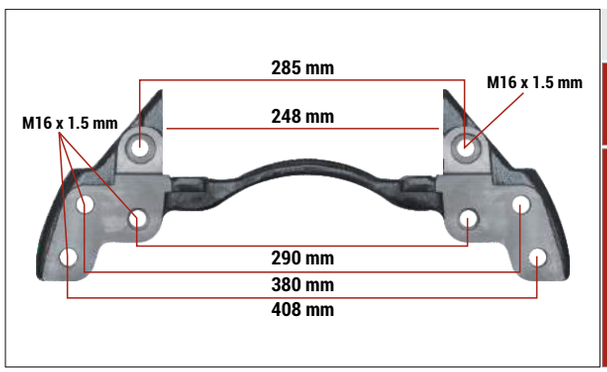

Knr DF 19,5 Inch Caliper Carrier

CHEEFT NUMBER	1255
OEM NUMBER	

ORIGINAL PART NUMBERS,MARKS AND MODELS MENTIONED ARE ONLY FOR DESCRIPTION PURPOSES.

CHEEFT®
AIR DISC BRAKE CALIPER REPAIR KITS

CARRIERS

MRT CALIPER CARRIERS

Always the Best...

CARRIERS

COHEEFT®
AIR DISC BRAKE CALIPER REPAIR KITS

CARRIERS

MRT CALIPER CARRIERS

Always the Best...

CARRIERS

MRT CALIPER CARRIERS

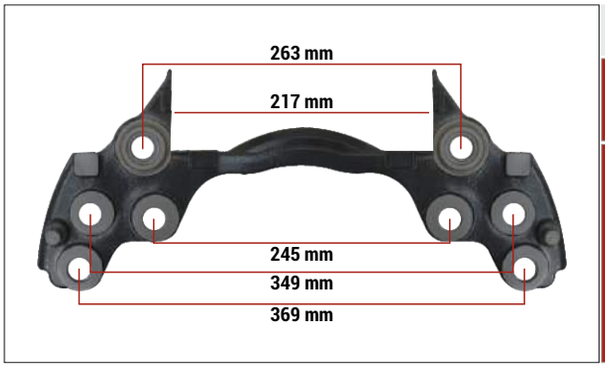

DUCO TYPE 19,5 Inch Caliper Carrier (Right-Left)

CHEEFT NUMBER	2315
OEM NUMBER	MRT 68323539

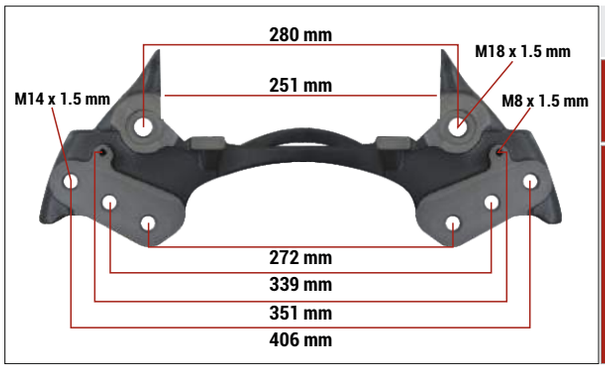

D3 TYPE 22,5 Inch Caliper Carrier

CHEEFT NUMBER	2316
OEM NUMBER	MRT BDA443

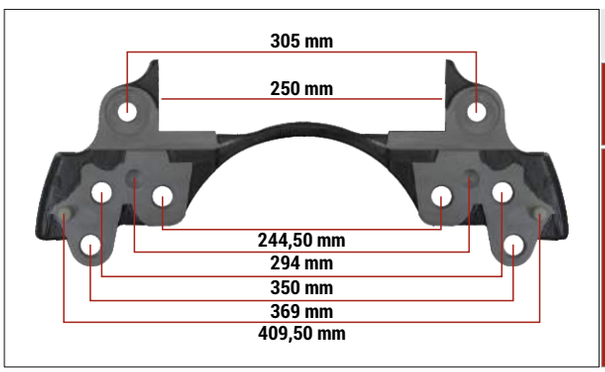

ELSA 195/225/EX225 22,5 Inch VLV Carrier (Right-Left)

CHEEFT NUMBER	2319
OEM NUMBER	68325303 - MCK1297 - MCK1322 VLV 85109886 - RNLT 5001 866 384 ELSA 225 VLV (WITH PIN)

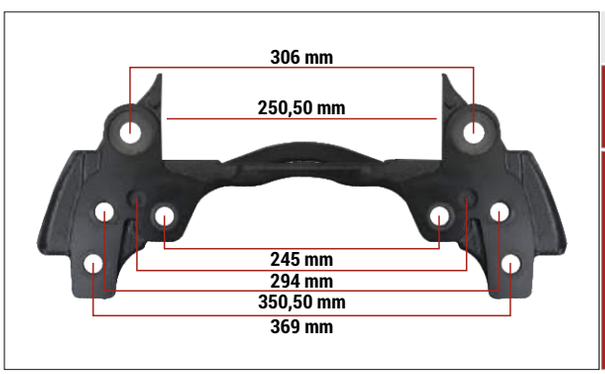

ELSA 2 22,5 Inch RNLT 420 Carrier (Right-Left)

CHEEFT NUMBER	2320
OEM NUMBER	68323673 - 68323675 - 68323676 MN 35.50307.5526 ELSA 2 RNLT 420

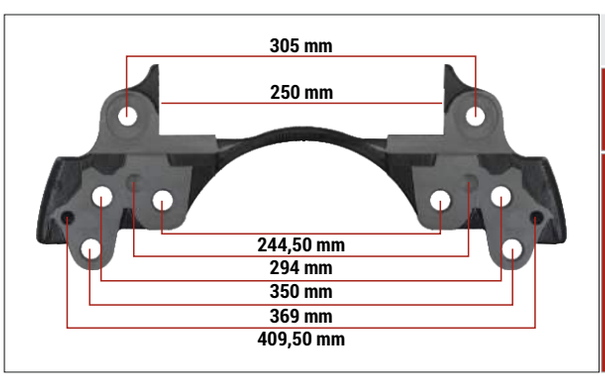

RNLT 440 22,5 Inch Carrier (Right-Left)

CHEEFT NUMBER	2321
OEM NUMBER	MRT MCK1297 - MCK1322 - VLV 85109886 RNLT 5001 866 384

ORIGINAL PART NUMBERS,MARKS AND MODELS MENTIONED ARE ONLY FOR DESCRIPTION PURPOSES.

MRT CALIPER CARRIERS

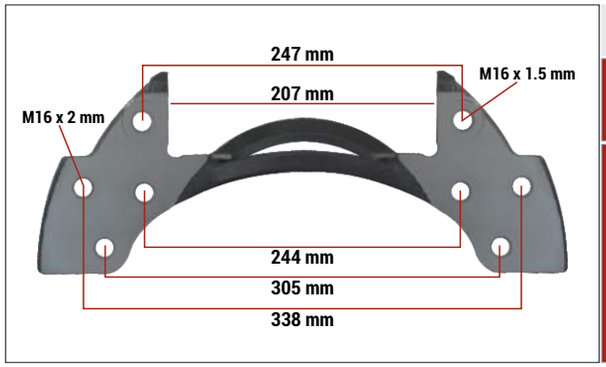

DX 195 Carrier (Right-Left)

CHEEFT NUMBER	2322
OEM NUMBER	MRT MCK1185

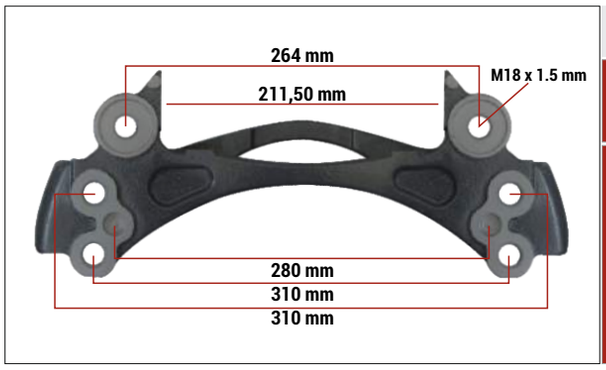

MRT 19,5 Inch Caliper Carrier For Ror AXL

CHEEFT NUMBER	2323
OEM NUMBER	DF 883186 MRT MCK1252

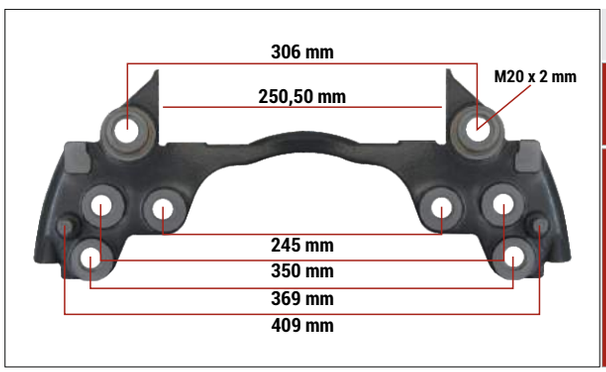

D DUCO TYPE 22,5 Inch Caliper Carrier (Right-Left)

CHEEFT NUMBER	2324
OEM NUMBER	68322778 - DF 1489072 - VLV 3092253

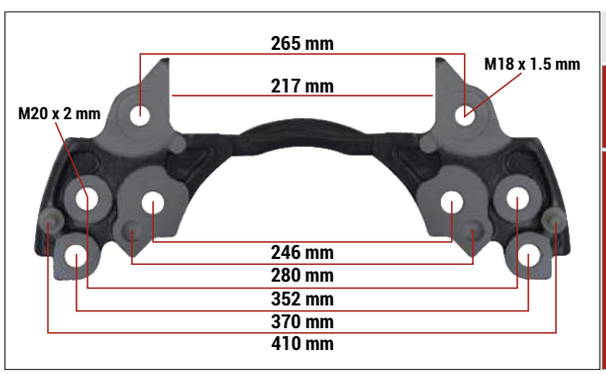

Caliper Carrier VLV

CHEEFT NUMBER	2325
OEM NUMBER	MRT MCK1319 - VLV 85109887 RNLT 5001866988

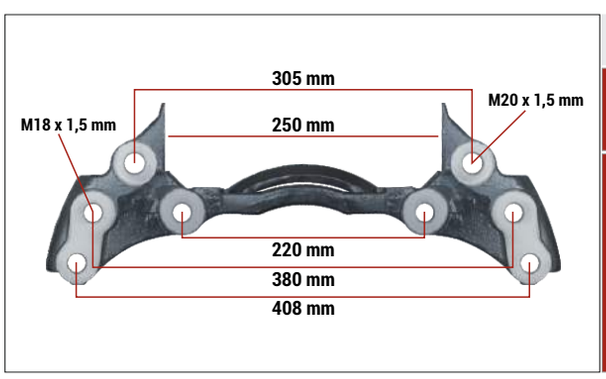

Caliper Carrier For 463-464 MN

CHEEFT NUMBER	2326
OEM NUMBER	MRT BDA445 - MN 81508026015 RNLT 5001019718 - ZF 0501211882

ORIGINAL PART NUMBERS,MARKS AND MODELS MENTIONED ARE ONLY FOR DESCRIPTION PURPOSES.

MRT CALIPER CARRIERS

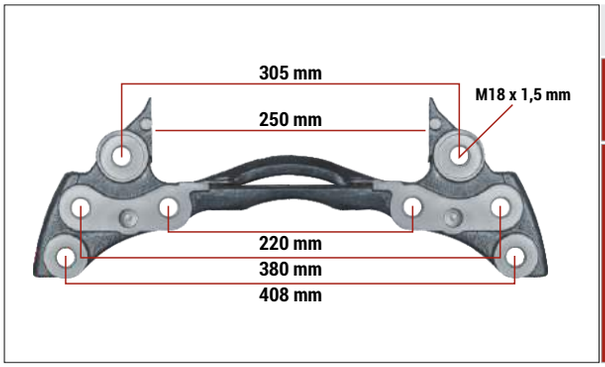

Caliper Carrier For ROR Axle

CHEEFT NUMBER	2327
OEM NUMBER	

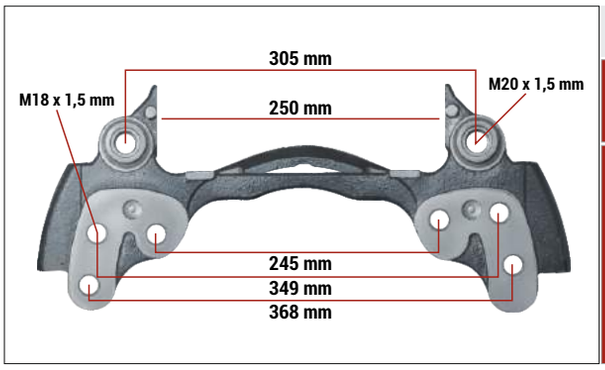

Caliper Carrier For RNLT 380-400 Trucks

CHEEFT NUMBER	2328
OEM NUMBER	

ORIGINAL PART NUMBERS,MARKS AND MODELS MENTIONED ARE ONLY FOR DESCRIPTION PURPOSES.

COHEEFT®
AIR DISC BRAKE CALIPER REPAIR KITS

CARRIERS

WBC CALIPER CARRIERS

Always the Best...

CARRIERS

WBC CALIPER CARRIERS

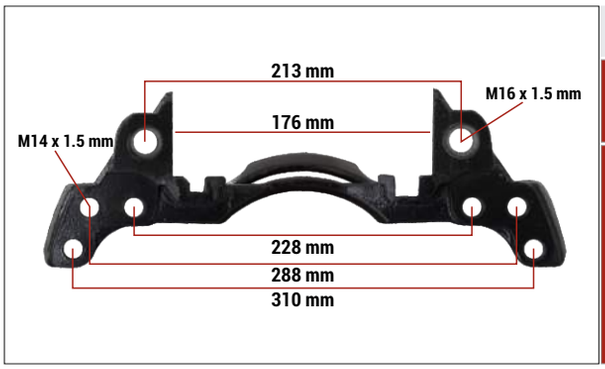

WBC Pan 17 Caliper Carrier 17,5 Inch (Right)

CHEEFT NUMBER	3259
OEM NUMBER	MN 81.50804.6355 - 81.50804.6087 81.50804.6071 - 81.50804.9071 81.50804.9087 - 81.50804.6089 - 1505372 81.50804.6070 - 81.50804.9070 81.50804.6354 - 81.50804.9088 - 1505373 IVECO 40175050

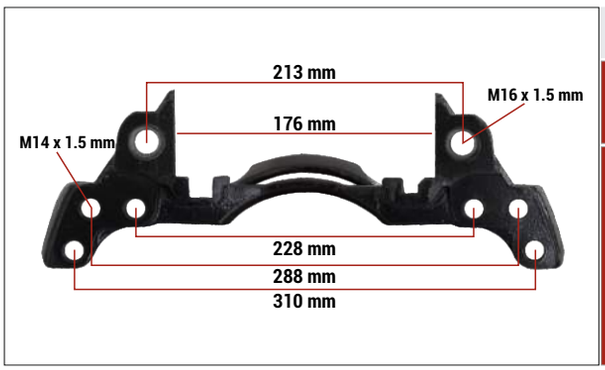

WBC Pan 17 Caliper Carrier 17,5 Inch (Left)

CHEEFT NUMBER	3260
OEM NUMBER	MN 81.50804.6355 - 81.50804.6087 81.50804.6071 - 81.50804.9071 81.50804.9087 - 81.50804.6089 - 1505372 81.50804.6070 - 81.50804.9070 81.50804.6354 -81.50804.9088 - 1505373 IVECO 40175050

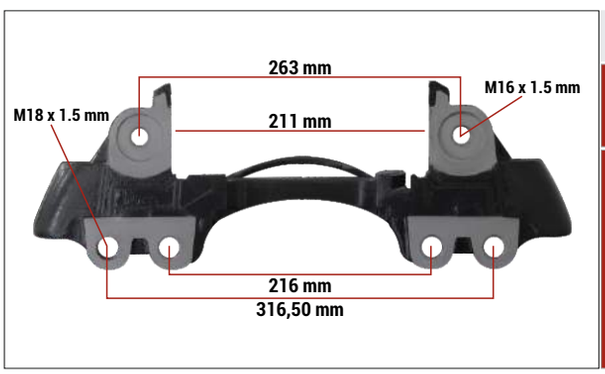

WBC Pan 22 Caliper Carrier 22,5 Inch (Right)

CHEEFT NUMBER	3261
OEM NUMBER	WBC 640 195 069 0 - 640 195 075 0 SF 3 080 0072 21 - 3 080 0074 20 Right SF Trailer Axle - 4 Hole

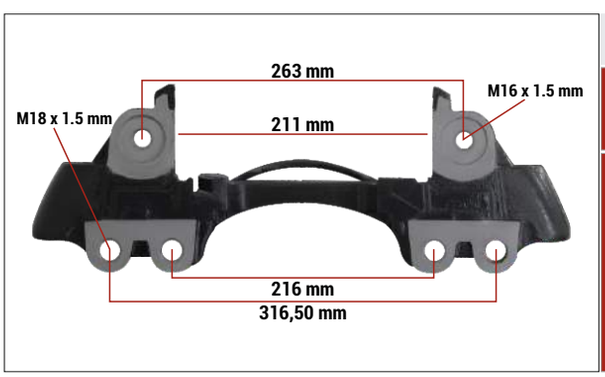

WBC Pan 22 Caliper Carrier 22,5 Inch (Left)

CHEEFT NUMBER	3262
OEM NUMBER	WBC 640 195 068 0 - 640 195 074 0 SF 3 080 0071 21 - 3 080 0073 20 Left SF Trailer Axle - 4 Hole

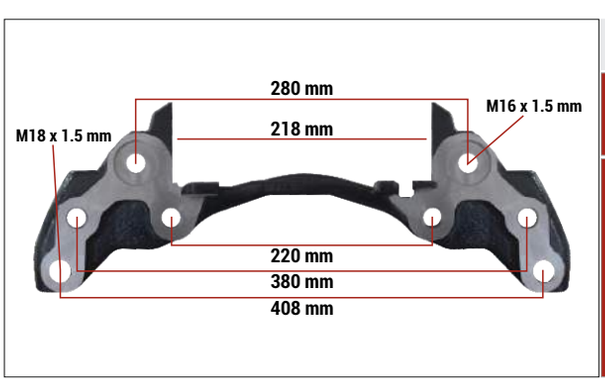

WBC Maxx 22 Caliper Carrier 22,5 Inch (Right)

CHEEFT NUMBER	3263
OEM NUMBER	Right WBC MAXX 22

ORIGINAL PART NUMBERS,MARKS AND MODELS MENTIONED ARE ONLY FOR DESCRIPTION PURPOSES.

WBC CALIPER CARRIERS

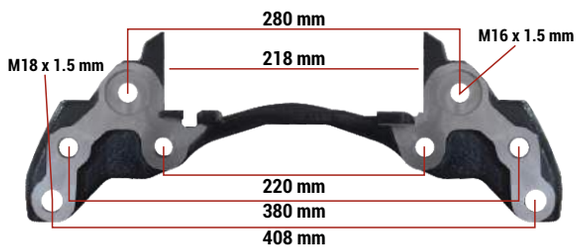

WBC Maxx 22 Caliper Carrier 22,5 Inch (Left)

CHEEFT NUMBER	3264
OEM NUMBER	MN 81.50822.6040 WBC 640 322 928 2 - 441 039 001 0 4811

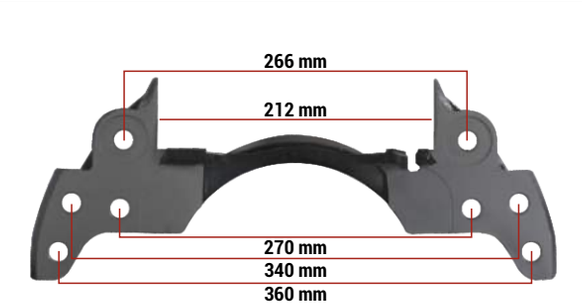

WBC Pan 19 Caliper Carrier (Right)

CHEEFT NUMBER	3265
OEM NUMBER	

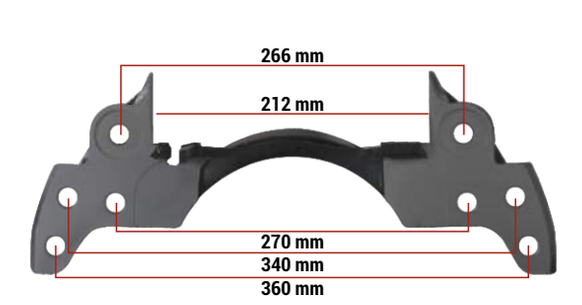

WBC Pan 19 Caliper Carrier (Left)

CHEEFT NUMBER	3266
OEM NUMBER	

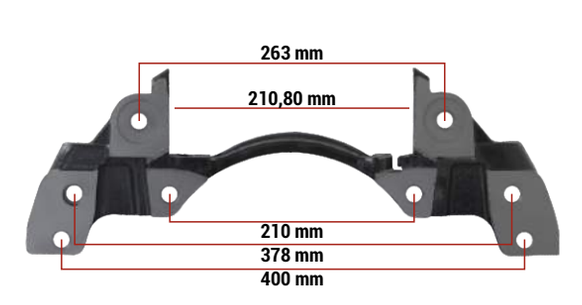

WBC Pan 22 Caliper Carrier 22,5 Inch (Right)

CHEEFT NUMBER	3269
OEM NUMBER	RIGHT WBC PAN 22

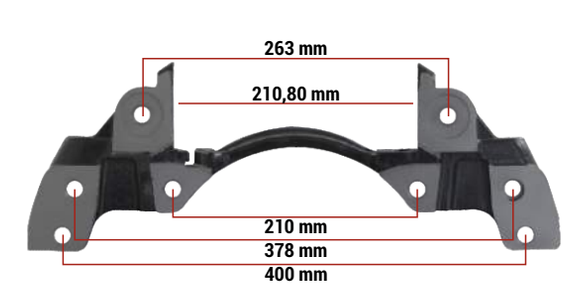

WBC Pan 22 Caliper Carrier 22,5 Inch (Left)

CHEEFT NUMBER	3270
OEM NUMBER	LEFT WBC PAN 22

ORIGINAL PART NUMBERS,MARKS AND MODELS MENTIONED ARE ONLY FOR DESCRIPTION PURPOSES.

WBC CALIPER CARRIERS

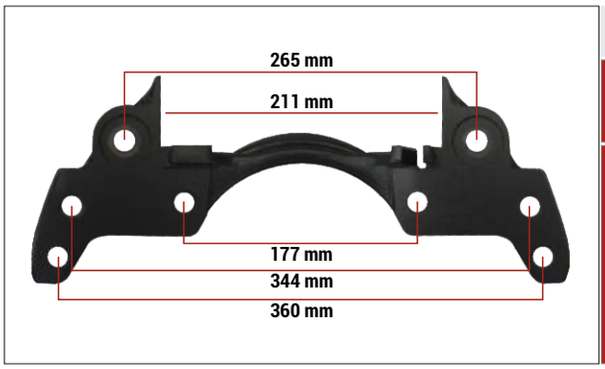

WBC 19,5 Inch Caliper Carrier (Right)

CHEEFT NUMBER	3273
OEM NUMBER	

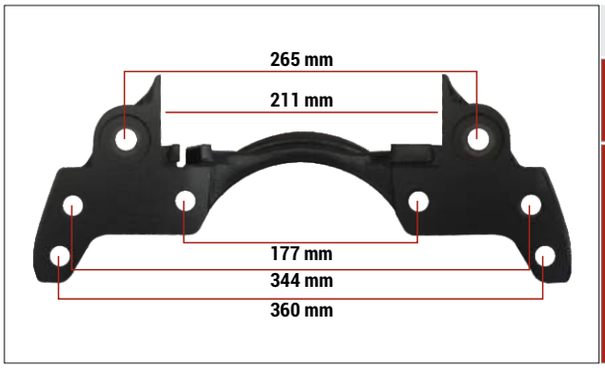

WBC 19,5 Inch Caliper Carrier (Left)

CHEEFT NUMBER	3274
OEM NUMBER	

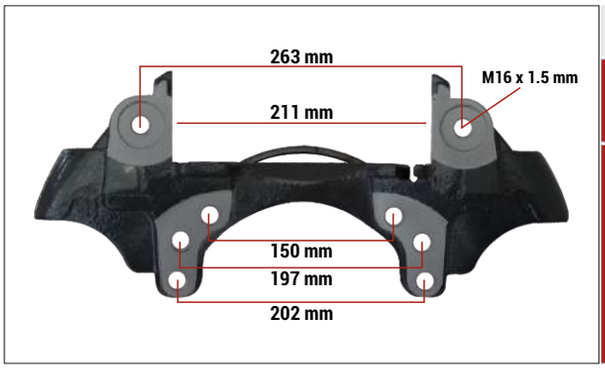

WBC Caliper Carrier VLX AXLE (Right)

CHEEFT NUMBER	3275
OEM NUMBER	WBC 6402250310

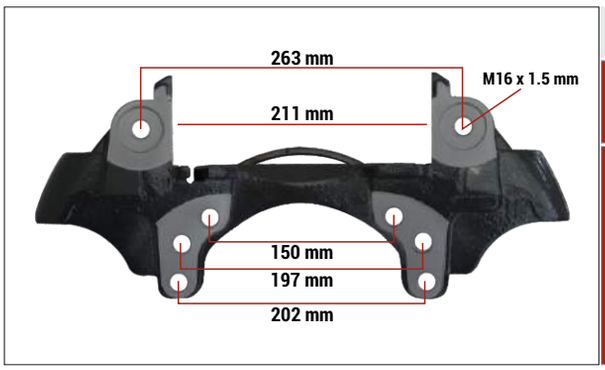

WBC Caliper Carrier VLX AXLE (Left)

CHEEFT NUMBER	3276
OEM NUMBER	WBC 6402250300

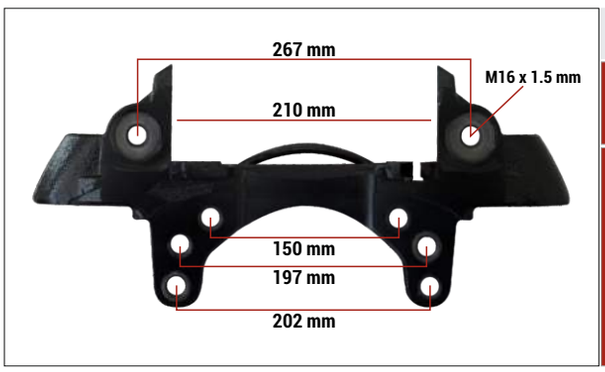

WBC Caliper Carrier for Schmitz Trailer (Right)

CHEEFT NUMBER	3277
OEM NUMBER	6402227406 D1-6J20

ORIGINAL PART NUMBERS,MARKS AND MODELS MENTIONED ARE ONLY FOR DESCRIPTION PURPOSES.

WBC CALIPER CARRIERS

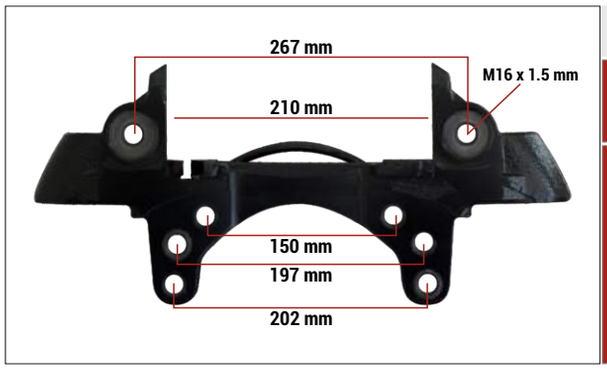

WBC Caliper Carrier for Schmitz Trailer (Left)	
CHEEFT NUMBER	3278
OEM NUMBER	6402227406 D3-6K25

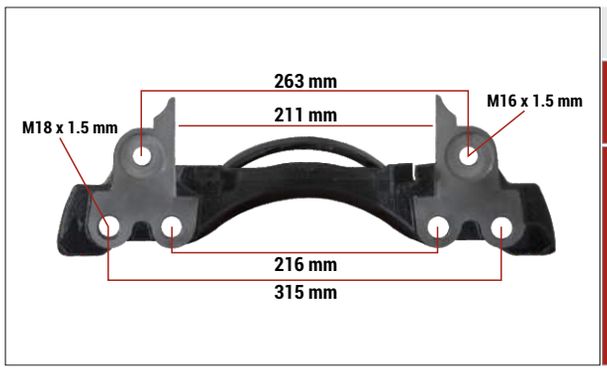

WBC 19,5 Inch Caliper Carrier (Right)	
CHEEFT NUMBER	3279
OEM NUMBER	

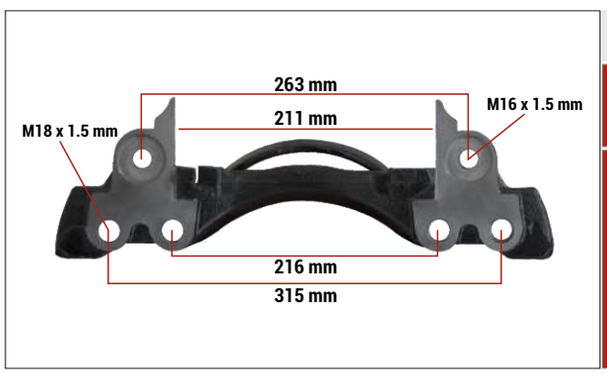

WBC 19,5 Inch Caliper Carrier (Left)	
CHEEFT NUMBER	3280
OEM NUMBER	

ORIGINAL PART NUMBERS,MARKS AND MODELS MENTIONED ARE ONLY FOR DESCRIPTION PURPOSES.

CHEEFT®
AIR DISC BRAKE CALIPER REPAIR KITS

CARRIERS

HDX CALIPER CARRIERS

Always the Best...

CARRIERS

COHEEFT®
AIR DISC BRAKE CALIPER REPAIR KITS

CARRIERS

HDX CALIPER CARRIERS

Always the Best...

HDX CALIPER CARRIERS

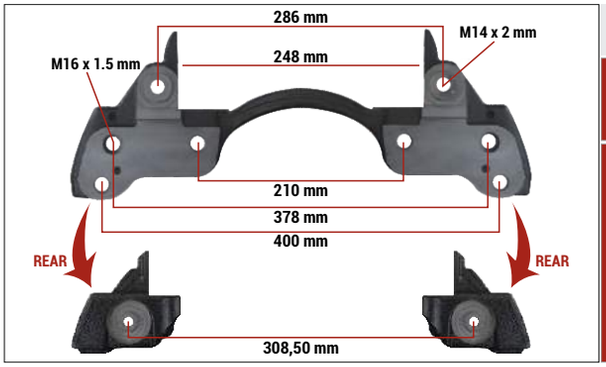

HDX Caliper Carrier 22,5 Inch (Right-Left)

CHEEFT NUMBER	4101
OEM NUMBER	HDX 90636 - 92502 MODUL X GEN 2 Trailer Axle

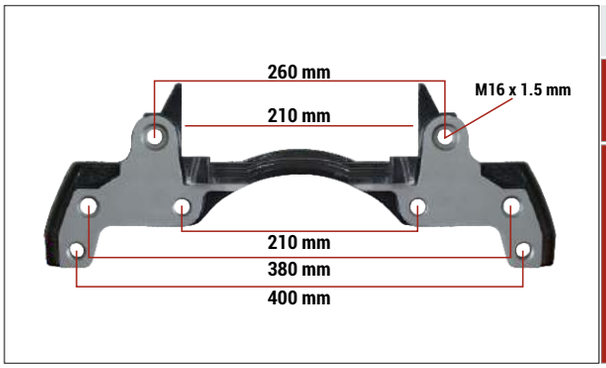

HDX Caliper Carrier For SF Axle Modul T

CHEEFT NUMBER	4102
OEM NUMBER	

ORIGINAL PART NUMBERS,MARKS AND MODELS MENTIONED ARE ONLY FOR DESCRIPTION PURPOSES.

COHEEFT®
AIR DISC BRAKE CALIPER REPAIR KITS

CARRIERS

SF CALIPER CARRIERS

Always the Best...

SF CALIPER CARRIERS

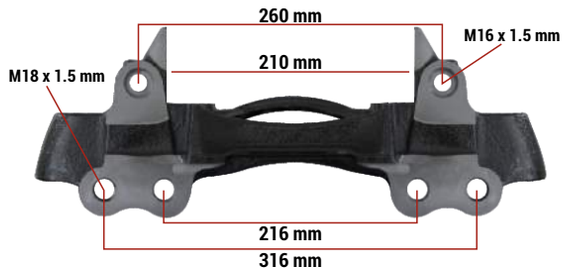

SF Modul T 22,5 Inch Caliper Carrier (Right-Left)	
CHEEFT NUMBER	6022
OEM NUMBER	MODUL T SF Trailer Axle

ORIGINAL PART NUMBERS,MARKS AND MODELS MENTIONED ARE ONLY FOR DESCRIPTION PURPOSES.

COHEEFT®

AIR DISC BRAKE CALIPER REPAIR KITS

BOLT

CALIPER CONNECTING BOLT

Always the Best...

CALIPER CONNECTING BOLT

CALIPER CONNECTING BOLT

CHEEFT NUMBER	1225

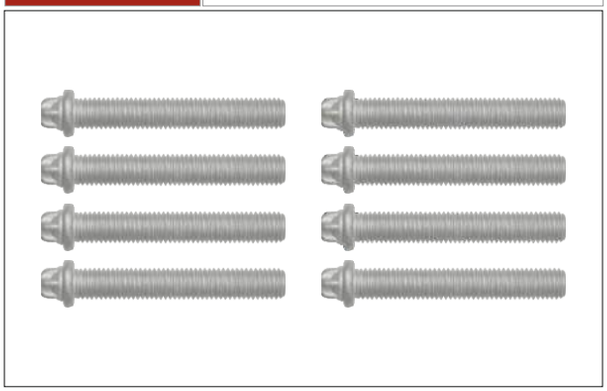

Cover Bolt Kit

OEM NUMBER	

NR	CHEEFT NR	DESCRIPTIONS	DIMENSION	QTY
1	1652	COVER BOLT	M12 x 1,75 x 80 mm	8

CHEEFT NUMBER	1226

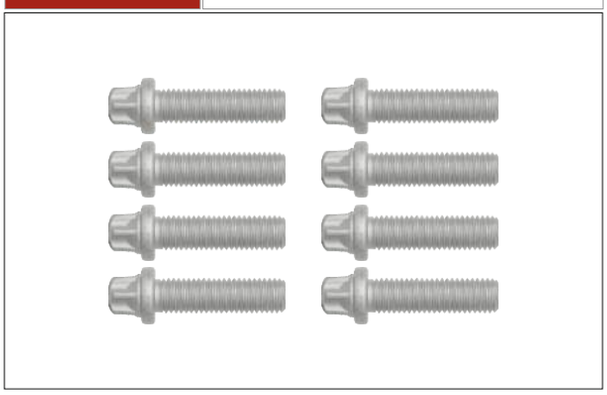

Cover Bolt Kit

OEM NUMBER	

NR	CHEEFT NR	DESCRIPTIONS	DIMENSION	QTY
1	1653	COVER BOLT	M14 x 2 x 52 mm	8

CHEEFT NUMBER	1227

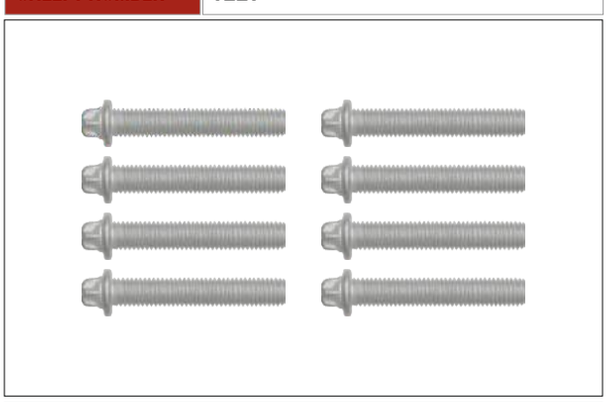

Cover Bolt Kit

OEM NUMBER	

NR	CHEEFT NR	DESCRIPTIONS	DIMENSION	QTY
1	1654	COVER BOLT	M10 x 1,5 x 60 mm	8

ORIGINAL PART NUMBERS,MARKS AND MODELS MENTIONED ARE ONLY FOR DESCRIPTION PURPOSES.

CALIPER CONNECTING BOLT

CHEEFT NUMBER	1204

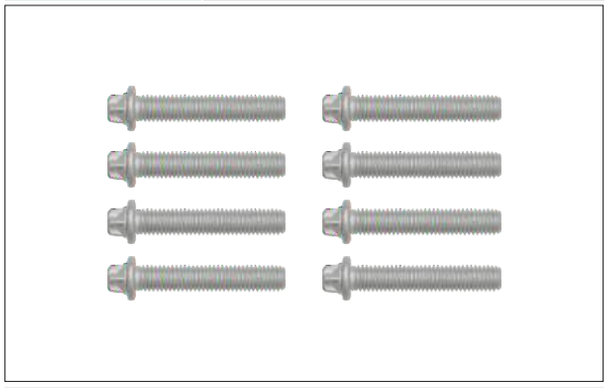

Cover Bolt Kit

OEM NUMBER	

NR	CHEEFT NR	DESCRIPTIONS	DIMENSION	QTY
1	1663	COVER BOLT	M8 x 1,25 x 45 mm	8

CHEEFT NUMBER	2310

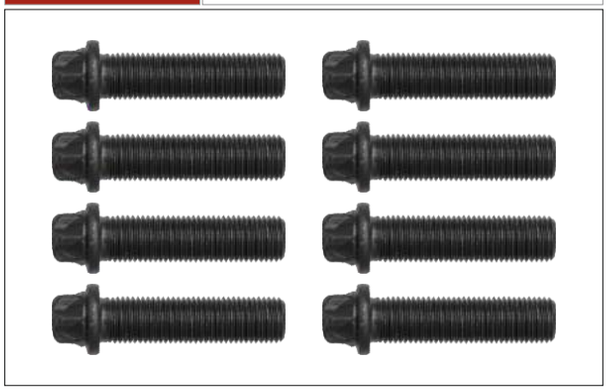

Cover Bolt Kit

OEM NUMBER	

NR	CHEEFT NR	DESCRIPTIONS	DIMENSION	QTY
1	2814	COVER BOLT	M14 x 1,5 x 55 mm	8

CHEEFT NUMBER	2171

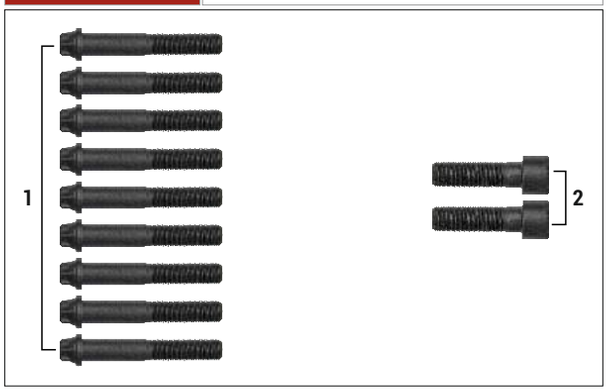

Caliper Cover Assembly Bolt Kit

OEM NUMBER	

NR	CHEEFT NR	DESCRIPTIONS	DIMENSION	QTY
1	2567	BOLT	M14 x 1,5 x 90 mm	9
2	2551	BOLT	M16 x 1,5 x 55 mm	2

ORIGINAL PART NUMBERS,MARKS AND MODELS MENTIONED ARE ONLY FOR DESCRIPTION PURPOSES.

CALIPER CONNECTING BOLT

CHEEFT NUMBER	1191

Caliper Connecting Bolt Kit

OEM NUMBER	

NR	CHEEFT NR	DESCRIPTIONS	DIMENSION	QTY
1	1664	CONNECTING BOLT	M20 x 70 x 48 x 2 mm	6

CHEEFT NUMBER	1158

Caliper Connecting Bolt Kit

OEM NUMBER	

NR	CHEEFT NR	DESCRIPTIONS	DIMENSION	QTY
1	1665	BOLT	M16 x 1,5 x 50 mm	12

CHEEFT NUMBER	2179

Caliper Connecting Bolt Kit

OEM NUMBER	

NR	CHEEFT NR	DESCRIPTIONS	DIMENSION	QTY
1	2845	CONNECTING BOLT	M20 x 45 x 42 x 2 mm	6

ORIGINAL PART NUMBERS,MARKS AND MODELS MENTIONED ARE ONLY FOR DESCRIPTION PURPOSES.

CALIPER CONNECTING BOLT

CHEEFT NUMBER	2181

Caliper Connecting Bolt Kit

OEM NUMBER	

NR	CHEEFT NR	DESCRIPTIONS	DIMENSION	QTY
1	2846	CONNECTING BOLT	M20 x 65 x 52 x 2 mm	6

CHEEFT NUMBER	3187

Caliper Connecting Bolt Kit

OEM NUMBER	

NR	CHEEFT NR	DESCRIPTIONS	DIMENSION	QTY
1	3632	CONNECTING BOLT	M18 x 65 x 45 x 1,5 mm	6

CHEEFT NUMBER	4084

Caliper Connecting Bolt Kit

OEM NUMBER	

NR	CHEEFT NR	DESCRIPTIONS	DIMENSION	QTY
1	4589	CONNECTING BOLT	M16 x 55 x 20 x 1,5 mm	6

ORIGINAL PART NUMBERS,MARKS AND MODELS MENTIONED ARE ONLY FOR DESCRIPTION PURPOSES.