ANDAC

2019

Demir ÇELİK
General Manager

1976 yılında ağır vasıtalar için servis ve yedek parça ile başlayan firmamız, 2008 yılından itibaren havalı ve hidrolik fren kaliperleri için tamir takımları ve komponentlerinin üretiminde uzmanlaşmıştır.
Makine parkuruna, bilgiye ve kalifiye elemana yapılan sürekli yatırımlarımız, bize global piyasada kesintisiz bir büyüme sağlayarak, ANDAÇ Otomotiv'i bu sektörün tartışılmaz liderlerinden biri konumuna getirmiştir.
Yüksek ürün kalitesi, hızlı sevkiyat ve rekabet gücü ile elde edilen, "gerçek müşteri memnuniyeti", bizim en gözde başarılarımızdan biridir. Ürün çeşitlerimizi her geçen gün artırmamıza destek olan ve firmamızın gelişmesinde emeği geçen siz değerli müşterilerimize teşekkürü bir borç biliriz.

ANDAC Automotive has started in 1976 as a spare parts retailer and service for heavy vehicles. Since 2008, ANDAC has specialized in manufacturing of repair kits and components for air activated and hydraulic brake caliper systems.
Constant investment in machinery, knowledge and qualified personal, brought us accordingly a continuous growth in the global market. It made ANDAC one of the undisputed leaders in this segment.
A full customer satisfaction provided with top product quality, fast delivery and competition power, is one of our finest achievements.We would like to thank you, our valued customers, for supporting us to improve our production range and your contribution for the development of our company.

В 1976 году наша компания начала свою деятельность, осуществляя сервисное обслуживание и поставки запасных частей для грузовых автомобилей, а с 2008 года мы являемся производителем составных компонентов для ремонтных комплектов воздушных и гидравлических тормозных суппортов.
Постоянные инвестиции в производственное оборудование, обучение персонала и развитие качества обеспечили для Андач Отомотив непрерывный рост на мировом рынке и позволили компании по праву считаться одним из лидеров в своей отрасли.
Высокое качество продукции и оперативная доставка в сочетании с привлекательным ценовым предложением - центральные конкурентные преимущества, которые позволяют нам достичь реальной удовлетворенности наших клиентов, что для нас является одним из главных достижений.
Хотим поблагодарить вас, наши уважаемые партнеры и клиенты, за помощь в расширении ассортимента нашей продукции, а также всем тем, кто внес вклад в развитие нашей компании.

ANDAC Automotive a commencé en 1976 en tant que détaillant de pièces détachées et service pour les véhicules poids lourds. Depuis 2008, ANDAC Automotive se spécialise dans la fabrication de composants et kits de réparations pour les étriers de freins activés par air.
L'investissement constant dans la machinerie, notre connaissance et le personnel qualifié nous ont apporté une croissance continue sur le marché mondial. Notre compagnie ANDAC est l'un des leaders incontestés dans ce segment. La satisfaction de notre clientèle grâce à une qualité remarquable, nos prix compétitifs et notre livraison rapide sont nos plus belles réalisations et voilà ce qui nous distingue des autres entreprises dans ce secteur.
Nous tenons à remercier nos précieux clients pour nous avoir supporté et leur contribution au sein du développement de la compagnie.

T.C.
TÜRK PATENT ENSTİTÜSÜ

MARKA TESCİL BELGESİ

Marka No : 2007 06969 - Ticaret

ANDTECH

Marka Sahibi : ANDAÇ OTOMOTİV SANAYİ VE TİCARET LİMİTED ŞİRKETİ TÜRKİYE CUMHURİYETİ 7419/6 Sok. No:50 5. Sanayi Sitesi Pınarbaşı İZMİR

Emtiası : 11 , 12, 17 İlişiktedir.

Markaların Korunması Hakkında 556 Sayılı Kanun Hükmünde Kararnameye göre 12/02/2007 tarihinden itibaren ON YIL müddetle tescil edilmiştir.

Kutay KUMBASAR
Enstitü Başkanı a.
Markalar Dairesi Başkanı

TÜRK PATENT ENSTİTÜSÜ

T.C.
TÜRK PATENT ENSTİTÜSÜ

MARKA TESCİL BELGESİ

Marka No : 2012 58739 - Ticaret

ANDAC

Marka Sahibi : ANDAÇ OTOMOTİV SANAYİ VE TİCARET LİMİTED ŞİRKETİ TÜRKİYE CUMHURİYETİ 7419/6 Sok. No:50 5. Sanayi Sitesi Pınarbaşı İZMİR

Emtiası : 11 , 12, 17 İlişiktedir.

Markaların Korunması Hakkında 556 Sayılı Kanun Hükmünde Kararnameye göre 20/06/2012 tarihinden itibaren ON YIL müddetle tescil edilmiştir.

Kutay KUMBASAR
Enstitü Başkanı a.
Markalar Dairesi Başkanı

TÜRK PATENT ENSTİTÜSÜ

ISO 9001:2015

Certificate of Registration

This is to certify that compliance of Quality Management System of

ANDAC OTOMOTIV SAN. VE TIC. LTD. STI.

7419/6 SOK. NO:50 5. SANAYI SITESI PINARBASI BORNOVA/IZMIR

has been assessed and found to conform the requirements of

ISO 9001 : 2015

for the scope of activities :

Air Over and Hydraulic Brake Systems, Air Suspension Systems, Cluth and Compressor Systems, Fasteners, Oil and Hydropneumatic Pumps, Air Over and Hydraulic Pistons, Engine Component Parts, Drive-Train Gears, Isolation and Sealing Elements, Air and Oil Cooling Systems; Production, Trading and Export Of The Spare Parts For The Mentioned Products

Permanite Exclusors

Certificate No.	: RQ90/IAS/098	Issue Date	: 23.03.2018
IAS Accreditation No	: MSCB-143	Valid Date	: 28.03.2019

BVQC BV Quality Certification — IAS ACCREDITED Management Systems Certification Body — IAF

For and on behalf of BV Quality Certification (P) Ltd

Regional Office Turkey — Head of Certification

Upon successful completion of surveillance audit, a new certificate with extended validity will be issued.
The Validity of this Certificate can be verified from www.bvquality.com
The Registration does not assure the quality of goods under the firm's production / services

BV Quality Certification (P) Ltd
Plot No. 29, 1st Main Road, Sabari Nagar Ext, 3rd Cross Street, Mugalivakkam, Chennai - 600 125, Tamilnadu, India.
Accredited by IAS (International Accreditation Service, INC., U.S.A - Member of International Accreditation Fo

ТАМОЖЕННЫЙ СОЮЗ

ЕАС

СЕРТИФИКАТ СООТВЕТСТВИЯ

№ ТС RU C-TR.АД50.В.00651
Серия RU № 0763367

ОРГАН ПО СЕРТИФИКАЦИИ Общество с ограниченной ответственностью «СТАНДАРТМАШТЕСТ». Место нахождения: 117437, Российская Федерация, город Москва, улица Академика Арцимовича, дом 17, помещение V, комната 9. Адрес места осуществления деятельности: 115114, Российская Федерация, город Москва, улица Летниковская, дом 9, строение 1. Аттестат аккредитации регистрационный № RA.RU.10АД50. Дата регистрации аттестата аккредитации 03.03.2017 года. Телефон: +74954813360. Адрес электронной почты: info@standartmashtest.ru

ЗАЯВИТЕЛЬ Общество с ограниченной ответственностью «Мир Технологий».
Основной государственный регистрационный номер: 1187746469096.
Место нахождения: 117042, Российская Федерация, город Москва, улица Адмирала Руднева, дом 4, этаж 6, помещение IV, офис 613
Телефон: 89154152183, адрес электронной почты: MirTekhnologiy@gmail.com

ИЗГОТОВИТЕЛЬ «ANDAC OTOMOTIV SAN VE TIC STI».
Место нахождения: ТУРЦИЯ, 7419/6 Sokak No: 50 5.Sanayi Sitesi Pinarbasi BORNOVA – 35060 - IZMIR

ПРОДУКЦИЯ Компоненты, поставляемые в качестве сменных (запасных) частей для послепродажного технического обслуживания автотранспортных средств, торговых марок «ANDTECH», «ANDAC»: детали защитные резиновые: согласно приложению - бланк № 0566238.
Продукция изготовлена в соответствии с Директивой 2007/46/ЕС.
Серийный выпуск

КОД ТН ВЭД ТС 4016 93 000 5

СООТВЕТСТВУЕТ ТРЕБОВАНИЯМ Технического регламента Таможенного союза ТР ТС 018/2011 "О безопасности колесных транспортных средств"

СЕРТИФИКАТ ВЫДАН НА ОСНОВАНИИ протокола испытаний № 1512АТС-2018 от 30.10.2018 года, выданного испытательной лабораторией «АвтоТракторные Средства» Общества с ограниченной ответственностью «ПРОММАШ ТЕСТ», аттестат аккредитации № RA.RU.21НА71.

Схема сертификации: 1с

ДОПОЛНИТЕЛЬНАЯ ИНФОРМАЦИЯ Условия хранения, срок хранения (службы, годности) продукции указаны в прилагаемой к продукции эксплуатационной документации. Стандарт, обеспечивающий соблюдение требований Технического регламента Таможенного союза ТР ТС 018/2011 "О безопасности колесных транспортных средств": ГОСТ Р 53820-2010 "Автомобильные транспортные средства. Детали уплотнительные и защитные. Технические требования и методы испытаний".

СРОК ДЕЙСТВИЯ С 01.11.2018 **ПО** 31.10.2022 **ВКЛЮЧИТЕЛЬНО**

М.П.

Руководитель (уполномоченное лицо) органа по сертификации (подпись) Игорь Олегович Ежов (инициалы, фамилия)

Эксперт (эксперт-аудитор) (эксперты (эксперты-аудиторы)) (подпись) Антон Васильевич Еремченко (инициалы, фамилия)

ТАМОЖЕННЫЙ СОЮЗ

ПРИЛОЖЕНИЕ

К СЕРТИФИКАТУ СООТВЕТСТВИЯ №ТС RU C-TR.АД50.В.00651
Серия RU № 0566238

КОД ТН ВЭД ТС	Наименование, типы, марки, модели однородной продукции, составные изделия или комплекса	Обозначение документации, в соответствии с которой выпускается продукция
4016 93 000 5	Компоненты, поставляемые в качестве сменных (запасных) частей для послепродажного технического обслуживания автотранспортных средств, торговых марок «ANDTECH», «ANDAC»: детали защитные резиновые:	
	чехлы, артикулы: 0810 10183, 0810 10184, 0810 10185, 0810 10232, 0810 10233, 0810 10234, 0810 10241, 0810 10242, 0810 10243, 0810 10244, 0810 10248, 0810 10249, 0810 10250, 0810 10251, 0810 10252, 0810 10253, 0810 10272, 0810 10322, 0810 10363, 0810 10373, 0810 10374, 0810 10921, 0810 10923, 0810 10934, 0810 10940, 0810 20101, 0810 20103, 0810 20105, 0810 20155, 0810 20183, 0810 20185, 0810 20228, 0810 20229, 0810 20230, 0810 20251, 0810 20252, 081020253, 0810 20256, 0810 20257, 0810 20258, 0810 20264, 0810 20265, 0810 20269, 0810 20270, 0810 20271, 0810 20272, 0810 20273, 0810 20274, 0810 20275, 0810 20276, 0810 20277, 0810 20278, 0810 20279, 0810 20280, 0810 20281, 0810 20282, 0810 20283, 0810 20288, 0810 20289, 0810 20290, 0810 20301, 0810 20341, 0810 20349, 0810 20365, 0810 20375, 0810 20388, 0810 20461, 081020462, 0810 20463, 0810 20464, 0810 20465, 0810 20466, 0810 20467, 0810 20468, 0810 20469, 0810 20470, 0810 20471, 0810 20472, 0810 20473, 0810 20474, 0810 20475, 0810 20476, 0810 20477, 0810 20478, 0810 20479, 0810 20480, 0810 20481, 0810 20482, 0810 20483, 0810 20484, 0810 20485, 0810 20486, 0810 20487, 0810 20488, 0810 20489, 0810 20490, 0810 20491, 0810 20492, 0810 20493, 0810 20494, 0810 20495, 0810 20496, 0810 20497, 0810 20498, 0810 20499, 0810 20500, 0810 20902, 0810 20903, 0810 20904, 0810 20905, 0810 20906, 0810 20959, 0810 30128, 0810 30129, 0810 30130, 0810 30131, 0810 30132, 0810 30133, 0810 30144, 0810 30145, 0810 30146, 0810 30147, 0810 30150, 0810 30151, 0810 30152, 0810 30153, 0810 30181, 0810 30195, 0810 30203, 0810 30213, 0810 30222, 0810 30906, 0810 40101, 0810 40102, 0810 40127, 0810 40128, 0810 40129, 0810 40130, 0810 40137, 0810 40903, 0810 40906, 0810 50116, 0810 50117, 0810 60133, 0810 60137, 0810 60138, 0810 60139, 0810 60142, 0810 60147, 0810 60148, 0810 60162, 0810 60914, 0810 60915, 0810 60916, 0810 60917, 0810 60918, 0810 60919, 0810 70117, 0810 70123, 0810 70124, 0810 10198, 0810 10103	

М.П.

Руководитель (уполномоченное лицо) органа по сертификации (подпись) Игорь Олегович Ежов (инициалы, фамилия)

Эксперт-аудитор (эксперт) (подпись) Антон Васильевич Еремченко (инициалы, фамилия)

083

080
ANDAÇ

AREK-108
TAK
ANDAC

ANDAC

MATRIX
MATRIX MAXI

046

ANDAÇ
OTOMOTİV
040

ANDAÇ

HYUNDAI
ANDAÇ

055
HH-A-T5
Mitutoyo
PH-A14
HRC
065

NHX 500
086
NHX 500

KNORR

ANDTECH No :	0810 10101
Org. Ref. No :	
Application :	SN 6..., SN 7..., SK 7...
Description :	Caliper Tappet Repair Kit (69mm)
1- K1T1	Tappet and Boot
2- B1	Bush

ANDTECH No :	0810 10102
Org. Ref. No :	
Application :	SN 6..., SN 7..., SK 7...
Description :	Caliper Tappet Repair Kit (69mm)
1- K1T1	Tappet and Boot
2- K2	Dust Cover
3- B1	Bush

ANDTECH No :	0810 10364
Org. Ref. No :	
Application :	SN 6..., SN 7..., SK 7...
Description :	Caliper Tappet Repair Kit (69mm) (Black with Clamp)
1- K1T1	Tappet and Boot
2- K150	Dust Cover
3- B1	Bush

www.andacotomotiv.com

All original numbers, marks and models from vehicle manufacturers listed in this catalogue are for comparison purposes only, and may not be used in invoices.

KNORR

ANDTECH No :	0810 10103
Org. Ref. No :	K092079 - K001300 - K010603 - K000366 - 1689313 - 81508226031 - 0004204982 - 1756389 0004202382 - 802119 BENDIX - 3434381400
Application :	SN 6..., SN 7..., SK 7..., ADB22X
Description :	Caliper Tappet Repair Kit (69mm)
1- K1T1	Tappet and Boot
2- K2	Dust Cover
3- B1	Bush

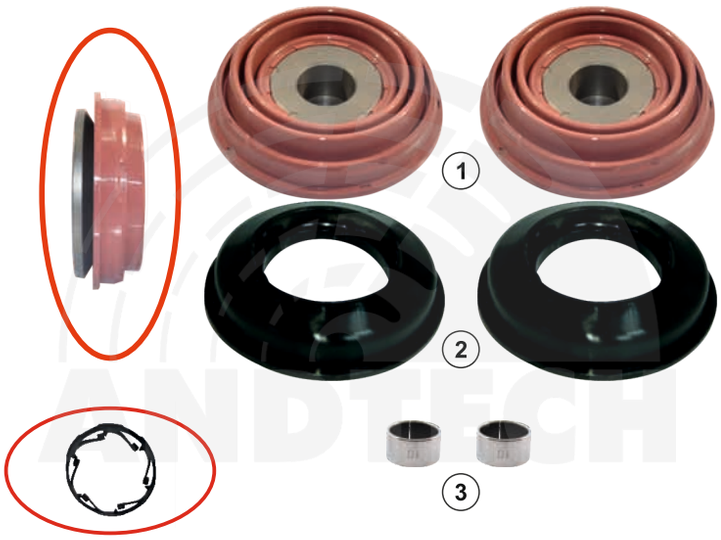

ANDTECH No :	0810 10365
Org. Ref. No :	K092079 - K001300 - K010603 - K000366 - 1689313 - 81508226031 - 0004204982 - 1756389 - 0004202382 - 802119 BENDIX - 3434381400
Application :	SN 6..., SN 7..., SK 7..., ADB22X
Description :	Caliper Tappet Repair Kit (69mm) (Black with Clamp)
1- K1T1	Tappet and Boot
2- K150	Dust Cover
3- B1	Bush

ANDTECH No :	0810 10104
Org. Ref. No :	
Application :	SN 6..., SN 7..., SK 7...
Description :	Caliper Tappet Repair Kit (69mm)
1- K1T1	Tappet and Boot
2- B1	Bush

www.andacotomotiv.com

All original numbers, marks and models from vehicle manufacturers listed in this catalogue are for comparison purposes only, and may not be used in invoices.

KNORR

ANDTECH No :	0810 10105
Org. Ref. No :	II370760065 - A0004201382
Application :	SB 5...
Description :	Caliper Tappet Repair Kit (74mm)
1- K3T2	Tappet and Boot
2- B1	Bush

ANDTECH No :	0810 10106
Org. Ref. No :	
Application :	SB 5..., SB 6..., SB 7...
Description :	Caliper Tappet Repair Kit (74mm)
1- K3T2	Tappet and Boot
2- K4	Dust Cover
3- B1	Bush

ANDTECH No :	0810 10366
Org. Ref. No :	
Application :	SB 5..., SB 6..., SB 7...
Description :	Caliper Tappet Repair Kit (74mm) (Black with Clamp)
1- K3T2	Tappet and Boot
2- K151	Dust Cover
3- B1	Bush

www.andacotomotiv.com

KNORR

ANDTECH No :	0810 10107
Org. Ref. No :	K000944 - K010604 - 81508226032 - 1759811 - 3434380400 - 14489130
Application :	SB 6..., SB 7...
Description :	Caliper Tappet Repair Kit (74mm)
1- K3T2	Tappet and Boot
2- K4	Dust Cover
3- B1	Bush

ANDTECH No :	0810 10367
Org. Ref. No :	K000944 - K010604 - 81508226032 - 1759811 - 3434380400 - 14489130
Application :	SB 6..., SB 7...
Description :	Caliper Tappet Repair Kit (74mm) (Black with Clamp)
1- K3T2	Tappet and Boot
2- K151	Dust Cover
3- B1	Bush

ANDTECH No :	0810 10108
Org. Ref. No :	II304130065 - 0004200682 81508226007 - 0004204248
Application :	SB 6..., SB 7...
Description :	Caliper Tappet Repair Kit (74mm)
1- K3T2	Tappet and Boot
2- B1	Bush

www.andacotomotiv.com

All original numbers, marks and models from vehicle manufacturers listed in this catalogue are for comparison purposes only, and may not be used in invoices.

KNORR

ANDTECH No :	0810 10110
Org. Ref. No :	
Application :	SL 7..., SM 7..., ST 7...
Description :	Caliper Tappet Repair Kit (69mm)
1- K1T62	Tappet and Boot
2- K2	Dust Cover
3- B11	Bush

ANDTECH No :	0810 10368
Org. Ref. No :	
Application :	SL 7..., SM 7..., ST 7...
Description :	Caliper Tappet Repair Kit (69mm) (Black with Clamp)
1- K1T62	Tappet and Boot
2- K150	Dust Cover
3- B11	Bush

ANDTECH No :	0810 10319
Org. Ref. No :	
Application :	SL 7..., SM 7..., ST 7...
Description :	Caliper Tappet Repair Kit (69mm)
1- K1T62	Tappet and Boot
2- B11	Bush

www.andacotomotiv.com

KNORR

ANDTECH No :	0810 10111
Org. Ref. No :	K046523 - A000 423 0316 - K108004K50 - K108004K64 - K108004K62 - 1227579 - 3434382300
Application :	SL 7..., SM 7..., ST 7..., SBS2220K0
Description :	Caliper Tappet Repair Kit (69mm)
1- K1T62	Tappet and Boot
2- K2	Dust Cover
3- B11	Bush

ANDTECH No :	0810 10369
Org. Ref. No :	K046523 - A000 423 0316 - K108004K50 - K108004K64 - K108004K62 - 1227579 - 3434382300
Application :	SL 7..., SM 7..., ST 7..., SBS2220K0
Description :	Caliper Tappet Repair Kit (69mm) (Black with Clamp)
1- K1T62	Tappet and Boot
2- K150	Dust Cover
3- B11	Bush

ANDTECH No :	0810 10112
Org. Ref. No :	K001929 - 81508226027 0004204282
Application :	SN 5...
Description :	Caliper Tappet Repair Kit (69mm)
1- K1T124	Tappet and Boot
2- B1	Bush

www.andacotomotiv.com

All original numbers, marks and models from vehicle manufacturers listed in this catalogue are for comparison purposes only, and may not be used in invoices.

KNORR

ANDTECH No :	0810 10113
Org. Ref. No :	
Application :	SN 5...
Description :	Caliper Tappet Repair Kit (69mm)
1- K1T124	Tappet and Boot
2- K112	Dust Cover
3- B1	Bush

ANDTECH No :	0810 10393
Org. Ref. No :	K017549 M2 - M1
Application :	SL7 New Version
Description :	Caliper Tappet Repair Kit
1- SK27	Circlip
2- K150	Dust Cover
3- K169	Tapped and Boot

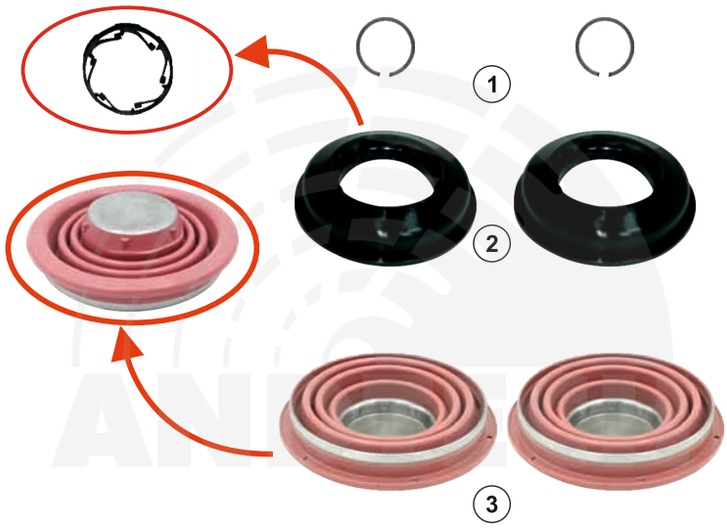

ANDTECH No :	0810 10394
Org. Ref. No :	K017549 M2 - M1
Application :	SL7 New Version
Description :	Caliper Tappet Repair Kit
1- SK27	Circlip
2- K169	Tapped and Boot

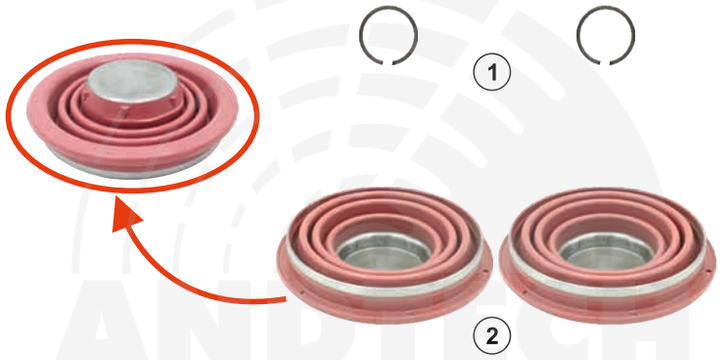

www.andacotomotiv.com

All original numbers, marks and models from vehicle manufacturers listed in this catalogue are for comparison purposes only, and may not be used in invoices.

KNORR

ANDTECH No :	0810 10395
Org. Ref. No :	K017549 M2 - M1
Application :	SL7 New Version
Description :	Caliper Tappet Circlip Kit
1- SK27	Circlip

ANDTECH No :	0810 10114
Org. Ref. No :	
Application :	SB 6..., SB 7...
Description :	Caliper Lever (93^0)
1- T52	Lever

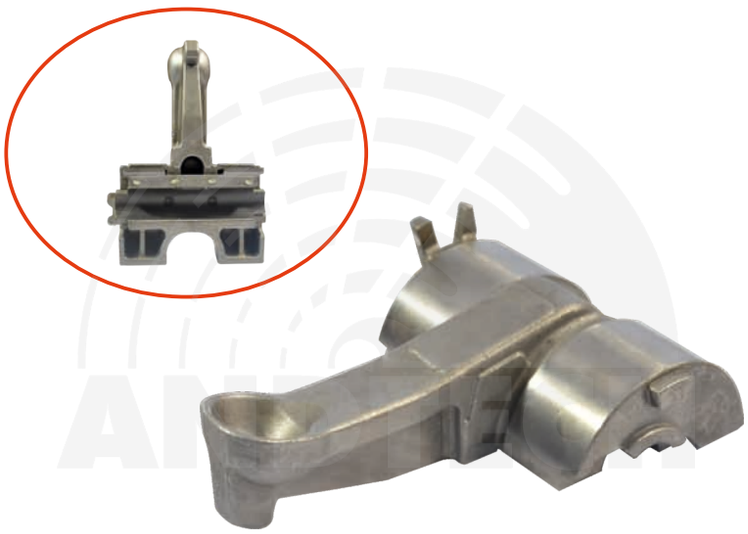

ANDTECH No :	0810 10115
Org. Ref. No :	
Application :	SB 7...
Description :	Caliper Lever
1- T18	Lever

www.andacotomotiv.com

All original numbers, marks and models from vehicle manufacturers listed in this catalogue are for comparison purposes only, and may not be used in invoices.

KNORR

ANDTECH No :	0810 10116
Org. Ref. No :	
Application :	SN 7...
Description :	Caliper Lever
1- T215	Lever

ANDTECH No :	0810 10117
Org. Ref. No :	
Application :	SN 7...
Description :	Caliper Lever
1- T216	Lever

ANDTECH No :	0810 10118
Org. Ref. No :	
Application :	SL 7..., SM 7...
Description :	Caliper Lever
1- T220	Lever

www.andacotomotiv.com

KNORR

ANDTECH No :	0810 10119
Org. Ref. No :	
Application :	SN 6..., SK 7..., ADB22X
Description :	Caliper Lever
1- T15	Lever

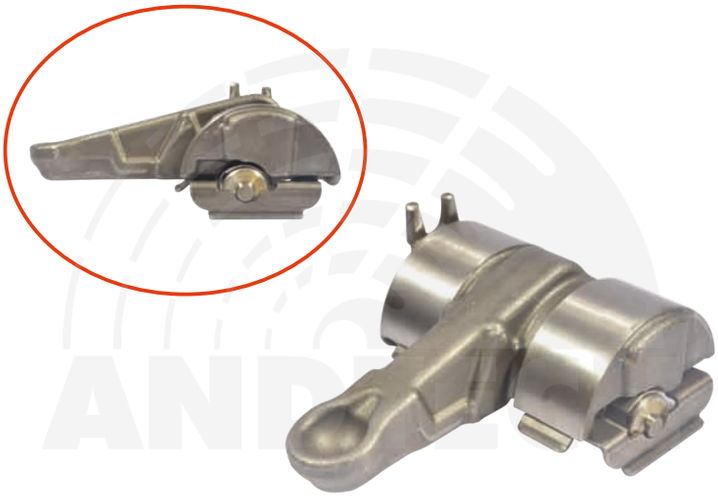

ANDTECH No :	0810 10120
Org. Ref. No :	
Application :	SN 6..., SK 7..., ADB22X
Description :	Caliper Lever
1- T19	Lever

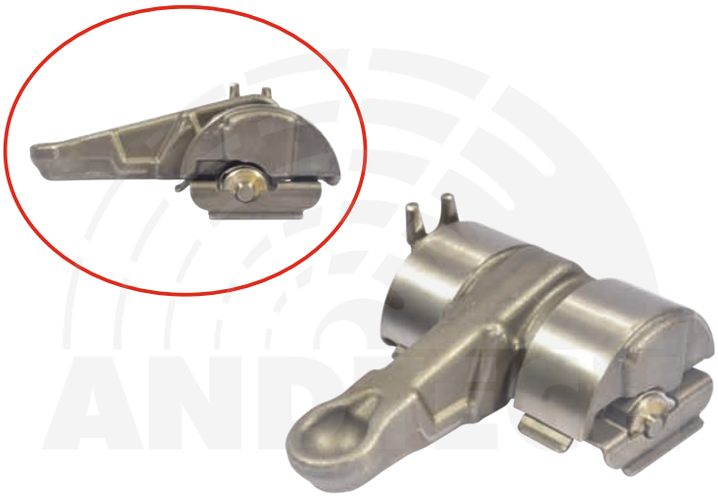

ANDTECH No :	0810 10392
Org. Ref. No :	
Application :	ST7..., Schmitz Trailer, ADB22XL
Description :	Caliper Lever
1- T634	Lever

www.andacotomotiv.com

All original numbers, marks and models from vehicle manufacturers listed in this catalogue are for comparison purposes only, and may not be used in invoices.

KNORR

ANDTECH No :	0810 10121
Org. Ref. No :	
Application :	SB 6..., SN 6...
Description :	Caliper Lever
1- T17	Lever

ANDTECH No :	0810 10122
Org. Ref. No :	
Application :	SB 7..., SN 7...,
Description :	Caliper Lever
1- T16	Lever

ANDTECH No :	0810 10123
Org. Ref. No :	
Application :	SB 7..., SN 7...
Description :	Caliper Lever
1- T217	Lever

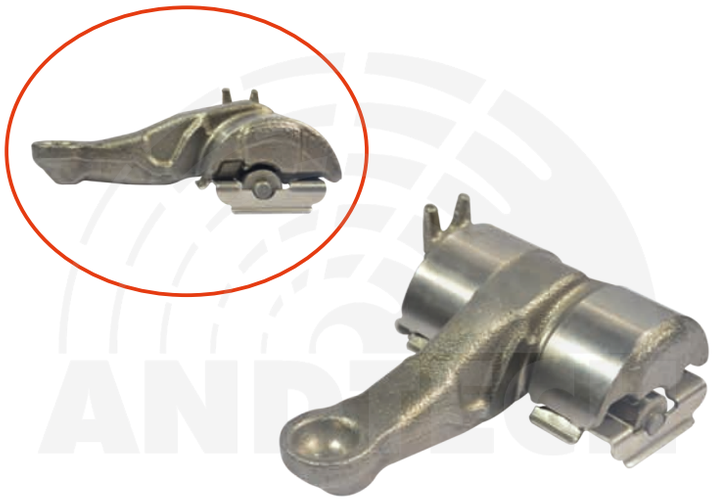

www.andacotomotiv.com

KNORR

ANDTECH No :	0810 10124
Org. Ref. No :	
Application :	SB 6..., SB 7...,
Description :	Caliper Lever
1- T218	Lever

ANDTECH No :	0810 10125
Org. Ref. No :	
Application :	SN 6..., SN 7..., SK7...
Description :	Caliper Lever
1- T219	Lever

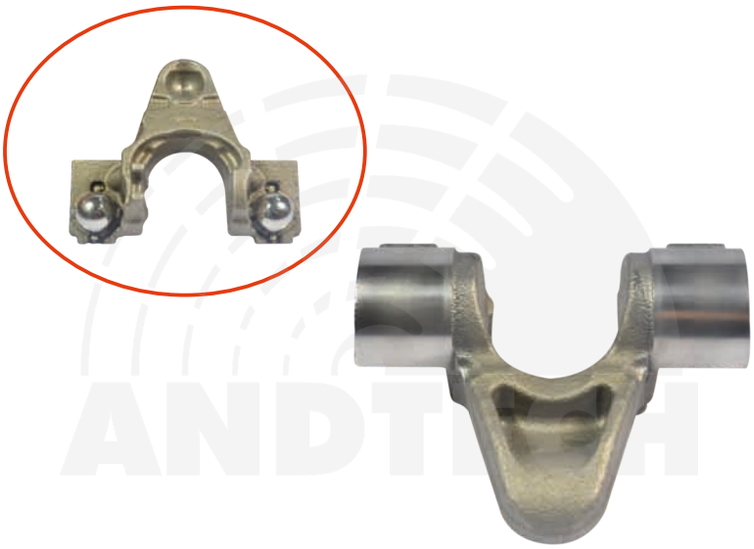

ANDTECH No :	0810 10126
Org. Ref. No :	
Application :	SN 5...
Description :	Caliper Lever
1- T221	Lever

www.andacotomotiv.com

All original numbers, marks and models from vehicle manufacturers listed in this catalogue are for comparison purposes only, and may not be used in invoices.

KNORR

ANDTECH No :	0810 10127
Org. Ref. No :	
Application :	SB 5...
Description :	Caliper Lever
1- T222	Lever

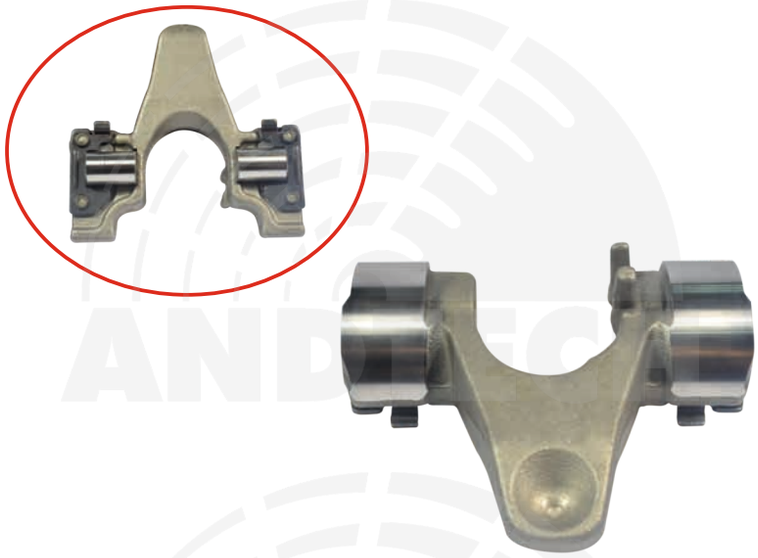

ANDTECH No :	0810 10128
Org. Ref. No :	
Application :	SB 5..., SB 6..., SB 7...
Description :	Caliper Roller Bearing
1- R14	Roller Bearing

ANDTECH No :	0810 10129
Org. Ref. No :	
Application :	SN 6..., SK 7..., SN 7..., ADB22X
Description :	Caliper Roller Bearing
1- R15	Roller Bearing

ANDTECH No :	0810 10130
Org. Ref. No :	
Application :	SN 5...
Description :	Caliper Roller Bearing
1- R16	Roller Bearing

www.andacotomotiv.com

All original numbers, marks and models from vehicle manufacturers listed in this catalogue are for comparison purposes only, and may not be used in invoices.

KNORR

ANDTECH No :	0810 10131
Org. Ref. No :	
Application :	SL 7..., SM 7..., ST 7...
Description :	Caliper Roller Bearing
1- R17	Roller Bearing

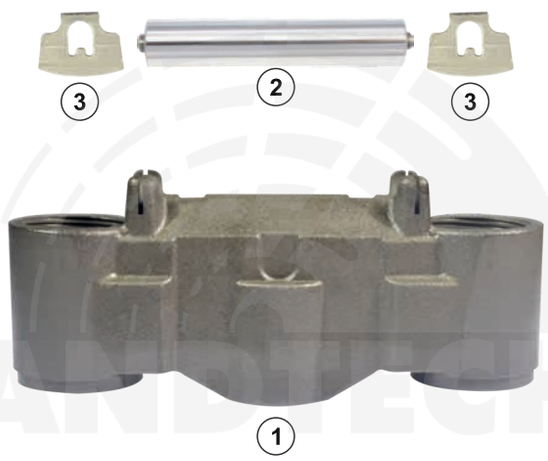

ANDTECH No :	0810 10132
Org. Ref. No :	
Application :	SN 6..., SN 7..., ADB22X
Description :	Caliper Bridge
1- T11	Bridge
2- T200	Lever Pin
3- S61	Metal Sheet

ANDTECH No :	0810 10133
Org. Ref. No :	
Application :	SN 6..., SN 7..., ADB22X
Description :	Caliper Bridge
1- T11	Bridge
2- T200	Lever Pin
3- S61	Metal Sheet
4- Y3	Bridge Spring

www.andacotomotiv.com

All original numbers, marks and models from vehicle manufacturers listed in this catalogue are for comparison purposes only, and may not be used in invoices.

KNORR

ANDTECH No :	0810 10134
Org. Ref. No :	
Application :	SN 6..., SN 7..., ADB22X
Description :	Caliper Bridge Assembly
1- T11	Bridge
2- T200	Lever Pin
3- S61	Metal Sheet
4- T14	Calibration Bolt 3 Thread
5- Y3	Bridge Spring
6- S20	Lever Bearing

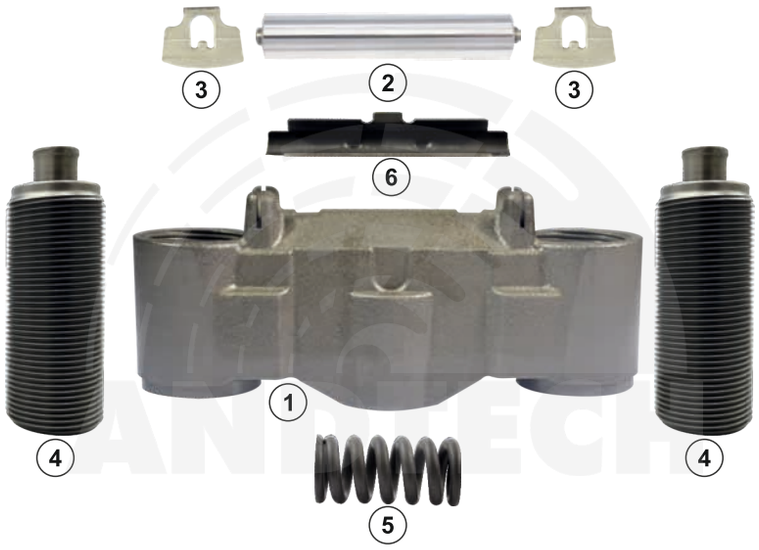

ANDTECH No :	0810 10135
Org. Ref. No :	
Application :	SB 6..., SB 7...
Description :	Caliper Bridge
1- T12	Bridge
2- T200	Lever Pin
3- S61	Metal Sheet

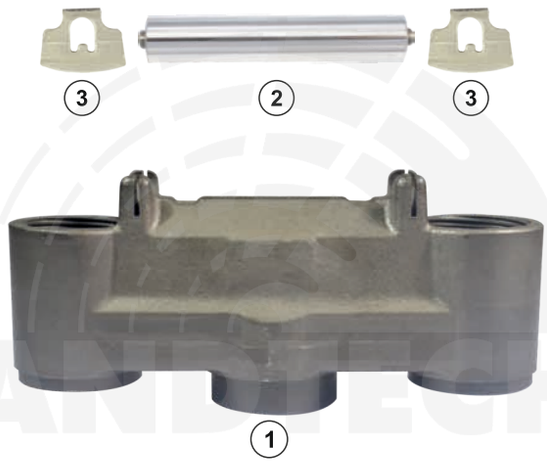

ANDTECH No :	0810 10136
Org. Ref. No :	
Application :	SB 6..., SB 7...
Description :	Caliper Bridge
1- T12	Bridge
2- T200	Lever Pin
3- S61	Metal Sheet
4- Y3	Bridge Spring

www.andacotomotiv.com

KNORR

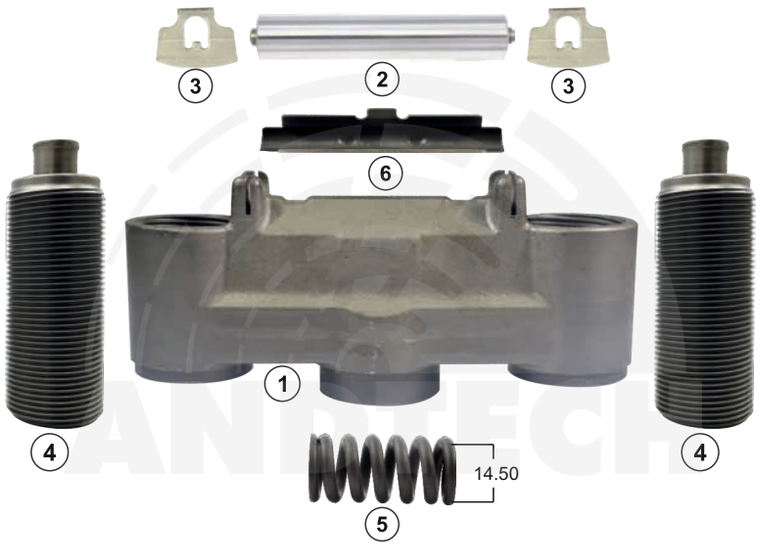

ANDTECH No :	0810 10137
Org. Ref. No :	
Application :	SB 6..., SB 7...
Description :	Caliper Bridge Assembly
1- T12	Bridge
2- T200	Lever Pin
3- S61	Metal Sheet
4- T14	Calibration Bolt 3 Thread
5- Y3	Bridge Spring
6- S20	Lever Bearing

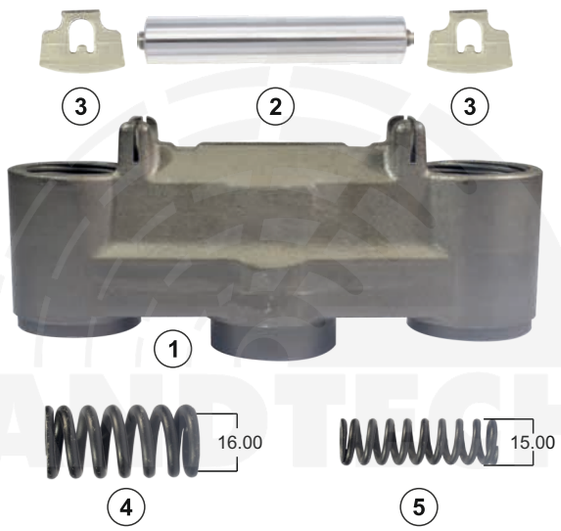

ANDTECH No :	0810 10138
Org. Ref. No :	
Application :	SB 7...
Description :	Caliper Bridge
1- T12	Bridge
2- T200	Lever Pin
3- S61	Metal Sheet
4- Y35	Bridge Spring
5- Y36	Bridge Spring

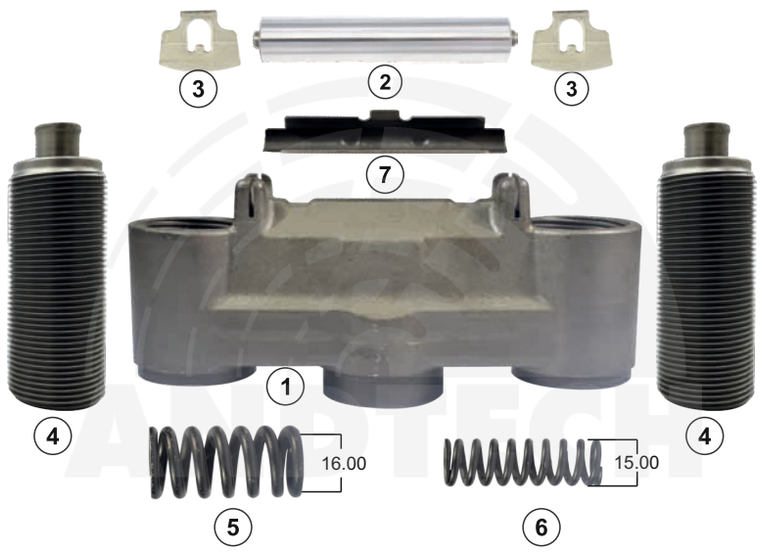

ANDTECH No :	0810 10139
Org. Ref. No :	
Application :	SB 7...
Description :	Caliper Bridge Assembly
1- T12	Bridge
2- T200	Lever Pin
3- S61	Metal Sheet
4- T14	Calibration Bolt 3 Thread
5- Y35	Bridge Spring
6- Y36	Bridge Spring
7- S20	Lever Bearing

www.andacotomotiv.com

All original numbers, marks and models from vehicle manufacturers listed in this catalogue are for comparison purposes only, and may not be used in invoices.

KNORR

ANDTECH No :	0810 10140
Org. Ref. No :	
Application :	SB 7..., SN 6..., SN 7..., SK 7..., SL 7..., SM 7..., ST 7..., ADB22X
Description :	Caliper Bridge
1- T13	Bridge

ANDTECH No :	0810 10141
Org. Ref. No :	
Application :	SB 7..., SN 6..., SN 7..., SK 7..., SL 7..., SM 7..., ST 7..., ADB22X
Description :	Caliper Bridge
1- T13	Bridge
2- Y3	Bridge Spring

ANDTECH No :	0810 10142
Org. Ref. No :	
Application :	SB 7..., SN 6..., SN 7..., SK 7..., ADB22X
Description :	Caliper Bridge Assembly
1- T13	Bridge
2- T14	Calibration Bolt 3 Thread
3- Y3	Bridge Spring

www.andacotomotiv.com

KNORR

ANDTECH No :	0810 10259
Org. Ref. No :	
Application :	SL 7..., SM 7..., ST 7...
Description :	Caliper Bridge Assembly
1- T13	Bridge
2- T207	Calibration Bolt 3 Thread
3- Y3	Bridge Spring

ANDTECH No :	0810 10343
Org. Ref. No :	
Application :	SB 5...
Description :	Caliper Bridge
1- T66	Bridge
2- T14	Calibration Bolt 3 Thread
3- Y37	Bridge Spring

ANDTECH No :	0810 10144
Org. Ref. No :	
Application :	SB 5...
Description :	Caliper Bridge
1- T66	Bridge
2- Y37	Bridge Spring

www.andacotomotiv.com

All original numbers, marks and models from vehicle manufacturers listed in this catalogue are for comparison purposes only, and may not be used in invoices.

KNORR

ANDTECH No :	0810 10143
Org. Ref. No :	
Application :	SB 5...
Description :	Caliper Bridge
1- T66	Bridge

ANDTECH No :	0810 10344
Org. Ref. No :	
Application :	SN 5...
Description :	Caliper Bridge
1- T99	Bridge
2- T14	Calibration Bolt 3 Thread
3- Y37	Bridge Spring

ANDTECH No :	0810 10146
Org. Ref. No :	
Application :	SN 5...
Description :	Caliper Bridge
1- T99	Bridge
2- Y37	Bridge Spring

www.andacotomotiv.com

All original numbers, marks and models from vehicle manufacturers listed in this catalogue are for comparison purposes only, and may not be used in invoices.

KNORR

ANDTECH No :	0810 10145
Org. Ref. No :	
Application :	SN 5...
Description :	Caliper Bridge
1- T99	Bridge

ANDTECH No :	0810 10147
Org. Ref. No :	
Application :	ALL SB..., SN ..., SK ..., ADB22X
Description :	Caliper Calibration Bolt 3 Thread
1- T14	Calibration Bolt 3 Thread

ANDTECH No :	0810 10148
Org. Ref. No :	
Application :	SL ..., SM..., ST...
Description :	Caliper Calibration Bolt 3 Thread
1- T207	Calibration Bolt 3 Thread

www.andacotomotiv.com

All original numbers, marks and models from vehicle manufacturers listed in this catalogue are for comparison purposes only, and may not be used in invoices.

KNORR

ANDTECH No :	0810 10396
Org. Ref. No :	K017549 M2-M1
Application :	SL 7 New Version
Description :	Caliper Calibration Bolt
1- T626	Calibration Bolt (New Type)

ANDTECH No :	0810 10149
Org. Ref. No :	
Application :	ALL SB..., SN ..., SK ..., SL ..., SM ..., ST ...
Description :	Caliper Adjusting Mechanism
1- T120	Adjusting Mechanism
2- T130	Mechanism Gear

ANDTECH No :	0810 10345
Org. Ref. No :	
Application :	ALL SB..., SN ..., SK ..., SL ..., SM ..., ST ...
Description :	Caliper Adjusting Mechanism
1- T386	Adjusting Mechanism
2- T130	Mechanism Gear
3- T20	Calibration Loaf

www.andacotomotiv.com

KNORR

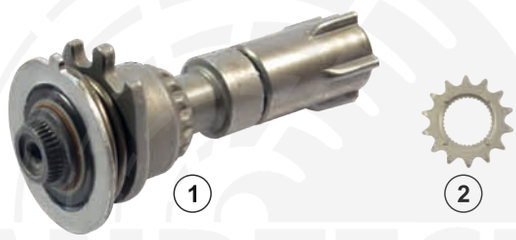

ANDTECH No :	0810 10150
Org. Ref. No :	
Application :	SB 5..., SN 5...
Description :	Caliper Adjusting Mechanism (Mercedes)
1- T123	Adjusting Mechanism
2- T130	Mechanism Gear

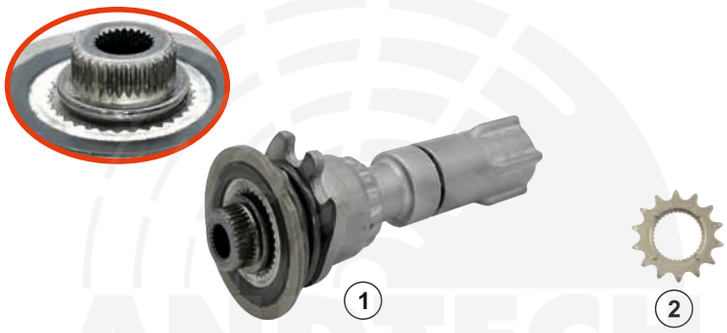

ANDTECH No :	0810 10404
Org. Ref. No :	
Application :	SN5 ...
Description :	Caliper Adjusting Mechanism (Man)
1- T640	Adjusting Mechanism
2- T130	Mechanism Gear

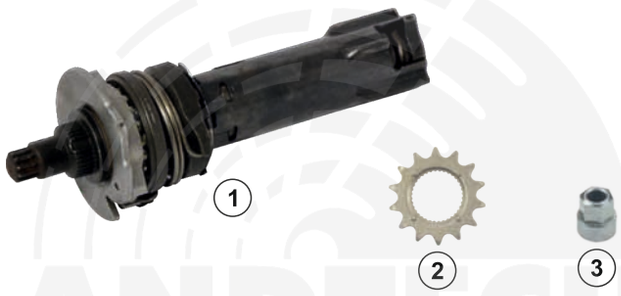

ANDTECH No :	0810 10353
Org. Ref. No :	
Application :	SL 7..., SM 7...
Description :	Caliper Adjusting Mechanism (New Model)
1- T342	Adjusting Mechanism
2- T130	Mechanism Gear
3- T20	Calibration Loaf

ANDTECH No :	0810 10151
Org. Ref. No :	
Application :	SB 6..., SB 7..., SN 6..., SN 7..., SK 7..., ADB22X
Description :	Caliper Adjusting Mechanism
1- T121	Adjusting Mechanism

www.andacotomotiv.com

All original numbers, marks and models from vehicle manufacturers listed in this catalogue are for comparison purposes only, and may not be used in invoices.

KNORR

ANDTECH No :	0810 10256
Org. Ref. No :	
Application :	SB 6..., SB 7..., SN 6..., SN 7..., SK 7..., ADB22X
Description :	Caliper Adjusting Mechanism (Steel Support)
1- T50	Adjusting Mechanism

ANDTECH No :	0810 10261
Org. Ref. No :	
Application :	SB 6..., SB 7..., SN 6..., SN 7..., SK 7...
Description :	Caliper Adjusting Mechanism
1- T269	Adjusting Mechanism

ANDTECH No :	0810 10152
Org. Ref. No :	
Application :	SN 6..., SN 7..., SK 7...
Description :	Caliper Adjusting Mechanism
1- T122	Adjusting Mechanism

ANDTECH No :	0810 10153
Org. Ref. No :	
Application :	SN 6..., SN 7..., SK 7...
Description :	Caliper Adjusting Mechanism
1- T208	Adjusting Mechanism

www.andacotomotiv.com

All original numbers, marks and models from vehicle manufacturers listed in this catalogue are for comparison purposes only, and may not be used in invoices.

KNORR

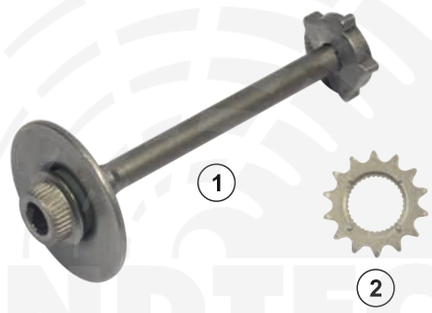

ANDTECH No :	0810 10154
Org. Ref. No :	
Application :	SN 6..., SN 7..., SK 7..., ST 7..., ADB22X
Description :	Caliper Adjusting Mechanism
1- T209	Adjusting Mechanism
2- T130	Mechanism Gear

ANDTECH No :	0810 10354
Org. Ref. No :	
Application :	ALL SL 7…, SM 7…, SN7...
Description :	Caliper Adjusting Mechanism (New Model)
1- T343	Adjusting Mechanism
2- T130	Mechanism Gear

ANDTECH No :	0810 10246
Org. Ref. No :	
Application :	SB 5..., SN 5
Description :	Caliper Pinion Shaft
1- T245	Pinion Shaft
2- T130	Mechanism Gear

ANDTECH No :	0810 10247
Org. Ref. No :	
Application :	SB 5..., SN 5
Description :	Caliper Pinion Shaft
1- T214	Pinion Shaft

www.andacotomotiv.com

All original numbers, marks and models from vehicle manufacturers listed in this catalogue are for comparison purposes only, and may not be used in invoices.

KNORR

ANDTECH No :	0810 10238
Org. Ref. No :	
Application :	ALL SB, SN, SK, SL, SM, ST, ADB22X
Description :	Caliper Mechanism Gear
1- T130	Mechanism Gear

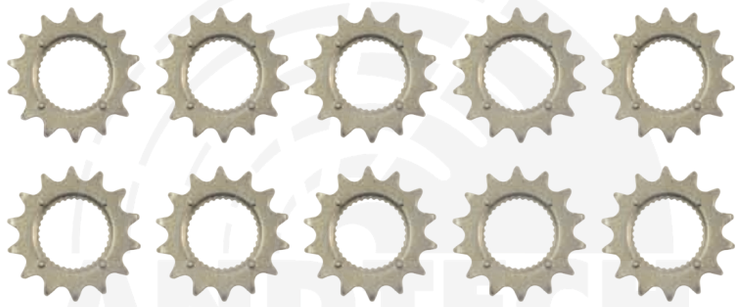

ANDTECH No :	0810 10239
Org. Ref. No :	Z001548 - 802455 BENDIX
Application :	ALL SB, SN, SK, SL, SM, ST, ADB22X
Description :	Caliper Calibration Loaf
1- T20	Calibration Loaf

ANDTECH No :	0810 10155
Org. Ref. No :	
Application :	SB 5...
Description :	Caliper Chain
1- T210	Caliper Chain 12 Link

ANDTECH No :	0810 10156
Org. Ref. No :	
Application :	SN 5...
Description :	Caliper Chain
1- T119	Caliper Chain 14 Link

www.andacotomotiv.com

All original numbers, marks and models from vehicle manufacturers listed in this catalogue are for comparison purposes only, and may not be used in invoices.

KNORR

ANDTECH No :	0810 10157
Org. Ref. No :	
Application :	SB 6..., SB 7..., SN 6..., SN 7..., SK 7..., SL 7..., SM 7..., ST 7..., ADB22X
Description :	Caliper Chain
1- T118	Caliper Chain 29 Link

ANDTECH No :	0810 10158
Org. Ref. No :	
Application :	SB..., SK..., SN...
Description :	Caliper Sensor Cover (Without Sensor) (Open)
1- P14	Sensor Cover

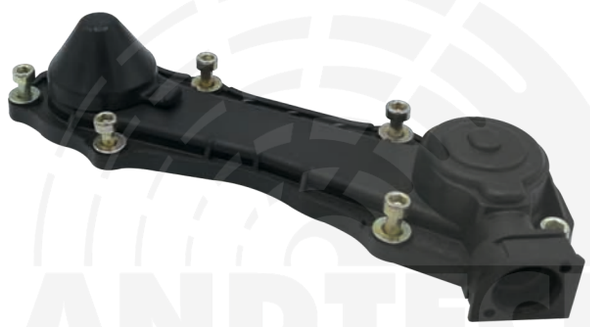

ANDTECH No :	0810 10384
Org. Ref. No :	
Application :	SB 7..., SK 7..., SN 7..., SN 6..., ADB22X
Description :	Caliper Sensor Cover (Without Sensor)
1- P85	Sensor Cover (New Version)

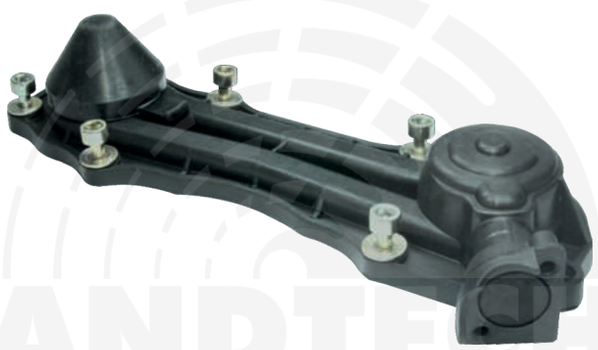

ANDTECH No :	0810 10293
Org. Ref. No :	
Application :	SB..., SK..., SN...
Description :	Caliper Sensor Cover (Without Sensor) (Closed)
1- P29	Blank Sensor Cover

www.andacotomotiv.com

All original numbers, marks and models from vehicle manufacturers listed in this catalogue are for comparison purposes only, and may not be used in invoices.

KNORR

ANDTECH No :	0810 10359
Org. Ref. No :	
Application :	SB..., SK..., SN..., ST...
Description :	Caliper Sensor Flat Cover
1- P71	Flat Sensor Cover

ANDTECH No :	0810 10159
Org. Ref. No :	
Application :	SB..., SK..., SN...
Description :	Caliper Sensor Cover (3 Socket - 2 Cable)
1- P2	Sensor Cover
2- P3	Clip

ANDTECH No :	0810 10385
Org. Ref. No :	
Application :	SB..., SK..., SN...
Description :	Caliper Sensor Cover (3 Socket - 2 Cable)
1- P86	Sensor Cover (New Version)
2- P3	Clip

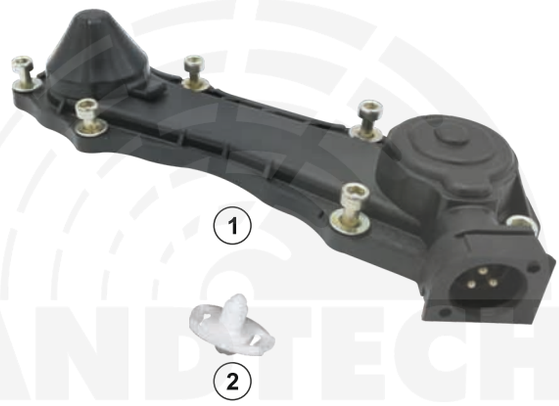

ANDTECH No :	0810 10160
Org. Ref. No :	
Application :	SB..., SK..., SN..., SL 7..., SM 7...
Description :	Caliper Sensor Cover (3 Socket - 3 Cable) (Mercedes)
1- P23	Sensor Cover
2- P3	Clip

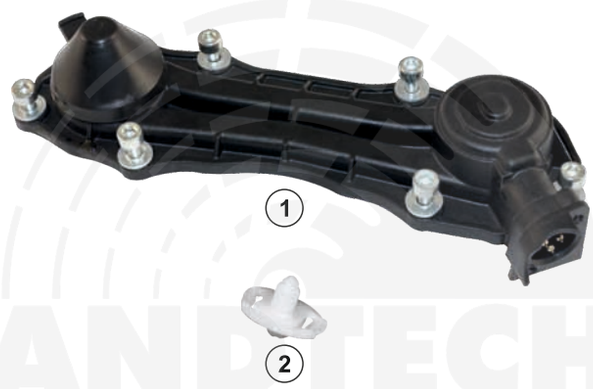

www.andacotomotiv.com

All original numbers, marks and models from vehicle manufacturers listed in this catalogue are for comparison purposes only, and may not be used in invoices.

KNORR

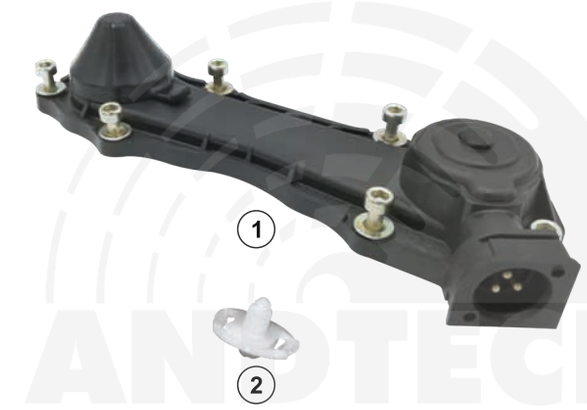

ANDTECH No :	0810 10386
Org. Ref. No :	
Application :	SB 7..., SK 7..., SN 7..., ADB22X
Description :	Caliper Sensor Cover (3 Socket - 3 Cable) (Mercedes)
1- P87	Sensor Cover (New Version)
2- P3	Clip

ANDTECH No :	0810 10161
Org. Ref. No :	
Application :	SB..., SN...
Description :	Caliper Sensor Cover (3 Socket - 3 Cable) (Man)
1- P15	Sensor Cover
2- P3	Clip

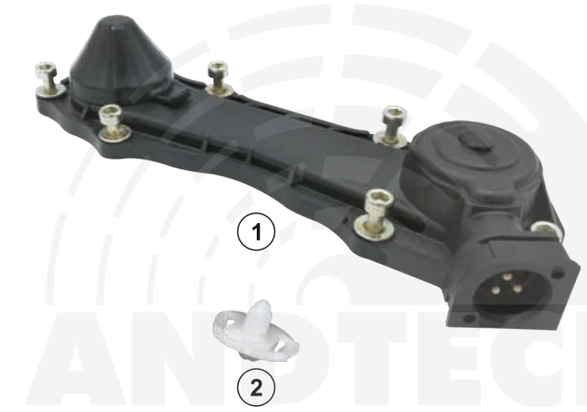

ANDTECH No :	0810 10387
Org. Ref. No :	
Application :	SB 7..., SK 7..., SN 7..., SN 6...
Description :	Caliper Sensor Cover (3 Socket - 3 Cable) (Man)
1- P88	Sensor Cover (New Version)
2- P3	Clip

ANDTECH No :	0810 10262
Org. Ref. No :	
Application :	SK..., SN...
Description :	Caliper Sensor Cover (Without Sensor)
1- P32	Sensor Cover

www.andacotomotiv.com

All original numbers, marks and models from vehicle manufacturers listed in this catalogue are for comparison purposes only, and may not be used in invoices.

KNORR

ANDTECH No :	0810 10388
Org. Ref. No :	
Application :	SK ..., SN ...
Description :	Caliper Sensor Cover (Without Sensor)
1- P89	Sensor Cover (New Version)

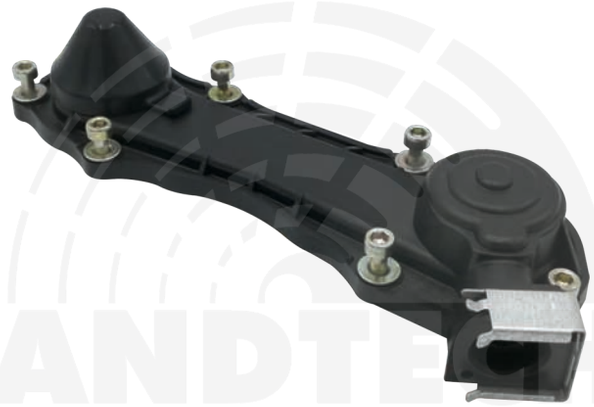

ANDTECH No :	0810 10263
Org. Ref. No :	
Application :	SK..., SN..., DAF
Description :	Caliper Sensor Cover (3 Socket - 2 Cable)
1- P31	Sensor Cover
2- P3	Clip

ANDTECH No :	0810 10389
Org. Ref. No :	
Application :	SB 7..., SK 7..., SN 7...
Description :	Caliper Sensor Cover (3 Socket - 2 Cable) (Scania)
1- P90	Sensor Cover (New Version)
2- P3	Clip

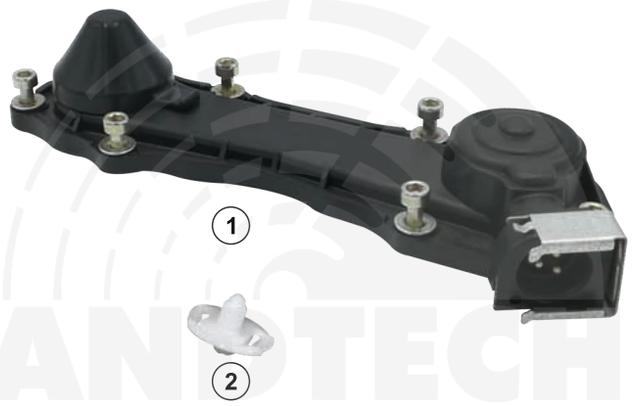

ANDTECH No :	0810 10162
Org. Ref. No :	
Application :	SK..., SN..., ADB22X
Description :	Caliper Sensor Cover (3 Socket - 3 Cable) (Scania)
1- P16	Sensor Cover
2- P3	Clip

www.andacotomotiv.com

All original numbers, marks and models from vehicle manufacturers listed in this catalogue are for comparison purposes only, and may not be used in invoices.

KNORR

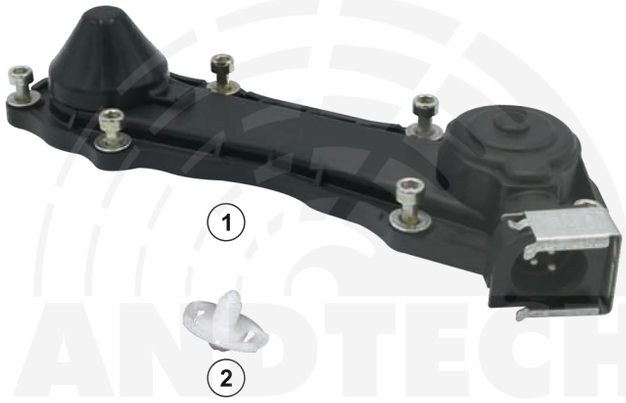

ANDTECH No :	0810 10390
Org. Ref. No :	
Application :	SB 7..., SK 7..., SN 7...
Description :	Caliper Sensor Cover (3 Socket - 3 Cable) (Scania)
1- P91	Sensor Cover (New Version)
2- P3	Clip

ANDTECH No :	0810 10360
Org. Ref. No :	
Application :	
Description :	Caliper Sensor Adaptor (Scania to MB)
1- P72	Sensor Adaptor

ANDTECH No :	0810 10164
Org. Ref. No :	
Application :	SB 6..., SB 7...
Description :	Caliper Sensor Cover (Without Sensor)
1- P18	Sensor Cover

ANDTECH No :	0810 10377
Org. Ref. No :	
Application :	SB 6..., SB 7...
Description :	Caliper Sensor Cover (Plugged)
1- P77	Sensor Cover

www.andacotomotiv.com

All original numbers, marks and models from vehicle manufacturers listed in this catalogue are for comparison purposes only, and may not be used in invoices.

KNORR

ANDTECH No :	0810 10264
Org. Ref. No :	
Application :	SK ..., SN ...
Description :	Caliper Sensor Cover (3 Socket - 2 Cable)
1- P33	Sensor Cover
2- P21	Sensor Pin (Plastic)

ANDTECH No :	0810 10163
Org. Ref. No :	
Application :	SK ..., SN ...
Description :	Caliper Sensor Cover (3 Socket - 3 Cable) (Mercedes)
1- P17	Sensor Cover
2- P21	Sensor Pin (Plastic)

ANDTECH No :	0810 10383
Org. Ref. No :	
Application :	SK ..., SN ...
Description :	Caliper Sensor Cover (3 Socket - 3 Cable) (Man)
1- P84	Sensor Cover
2- P21	Sensor Pin (Plastic)

ANDTECH No :	0810 10323
Org. Ref. No :	
Application :	SB 6..., SB 7...
Description :	Caliper Sensor Cover (Without Sensor)
1- P51	Sensor Cover

www.andacotomotiv.com

All original numbers, marks and models from vehicle manufacturers listed in this catalogue are for comparison purposes only, and may not be used in invoices.

KNORR

ANDTECH No :	0810 10324
Org. Ref. No :	
Application :	SN 6..., SN 7...
Description :	Caliper Sensor Cover (3 Socket - 2 Cable)
1- P52	Sensor Cover
2- P21	Sensor Pin (Plastic)

ANDTECH No :	0810 10325
Org. Ref. No :	
Application :	SK ..., SN ...
Description :	Caliper Sensor Cover (3 Socket - 3 Cable)
1- P53	Sensor Cover
2- P21	Sensor Pin (Plastic)

ANDTECH No :	0810 10265
Org. Ref. No :	
Application :	SB 5
Description :	Caliper Sensor Cover (Without Sensor)
1- P34	Sensor Cover

ANDTECH No :	0810 10266
Org. Ref. No :	
Application :	SB 5...
Description :	Caliper Sensor Cover (3 Socket - 2 Cable)
1- P35	Sensor Cover
2- P41	Sensor Pin (Plastic)

www.andacotomotiv.com

All original numbers, marks and models from vehicle manufacturers listed in this catalogue are for comparison purposes only, and may not be used in invoices.

KNORR

ANDTECH No :	0810 10267
Org. Ref. No :	
Application :	SB 5...
Description :	Caliper Sensor Cover (3 Socket - 3 Cable) (Mercedes)
1- P36	Sensor Cover
2- P41	Sensor Pin (Plastic)

ANDTECH No :	0810 10379
Org. Ref. No :	
Application :	SB 5...
Description :	Caliper Sensor Cover (3 Socket - 3 Cable) (Man)
1- P82	Sensor Cover
2- P41	Sensor Pin (Plastic)

ANDTECH No :	0810 10268
Org. Ref. No :	
Application :	SN 5...
Description :	Caliper Sensor Cover (Without Sensor)
1- P37	Sensor Cover

ANDTECH No :	0810 10269
Org. Ref. No :	
Application :	SN 5...
Description :	Caliper Sensor Cover (3 Socket - 2 Cable)
1- P38	Sensor Cover
2- P3	Clip

www.andacotomotiv.com

All original numbers, marks and models from vehicle manufacturers listed in this catalogue are for comparison purposes only, and may not be used in invoices.

KNORR

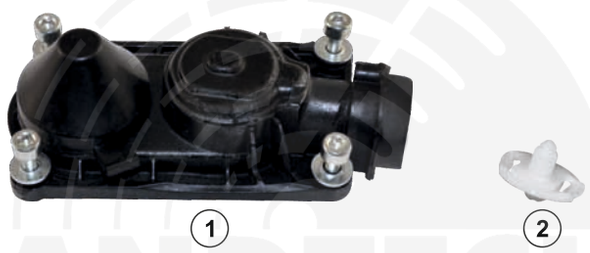

ANDTECH No :	0810 10270
Org. Ref. No :	
Application :	SN 5...
Description :	Caliper Sensor Cover (3 Socket - 3 Cable) (Mercedes)
1- P39	Sensor Cover
2- P3	Clip

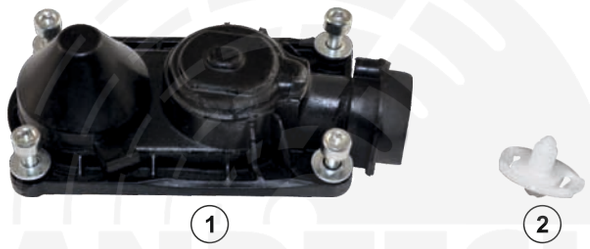

ANDTECH No :	0810 10381
Org. Ref. No :	
Application :	SN 5...
Description :	Caliper Sensor Cover (3 Socket - 3 Cable) (Man)
1- P83	Sensor Cover
2- P3	Clip

ANDTECH No :	0810 10363
Org. Ref. No :	
Application :	
Description :	Caliper Sensor Lattice
1- P10	Sensor Lattice

ANDTECH No :	0810 10252
Org. Ref. No :	
Application :	SK ..., SN ...
Description :	Caliper Sensor Pin (Long)
1- P21	Sensor Pin (Plastic)

www.andacotomotiv.com

All original numbers, marks and models from vehicle manufacturers listed in this catalogue are for comparison purposes only, and may not be used in invoices.

KNORR

ANDTECH No :	0810 10391
Org. Ref. No :	
Application :	SL ..., SM ...
Description :	Caliper Sensor Pin (New)
1- P93	Sensor Pin (Plastic)

ANDTECH No :	0810 10253
Org. Ref. No :	
Application :	ALL SB, SN, SK, SL, SM, ADB22X
Description :	Caliper Sensor Clip
1- P3	Clip

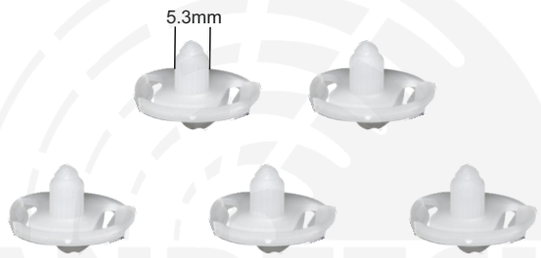

ANDTECH No :	0810 10320
Org. Ref. No :	
Application :	SN 6..., SN 7..., SK 7..., ADB22X
Description :	Caliper Sensor Clip
1- P40	Clip

ANDTECH No :	0810 10321
Org. Ref. No :	
Application :	SN 5...
Description :	Caliper Sensor Pin (Short)
1- P41	Sensor Pin (Plastic)

www.andacotomotiv.com

All original numbers, marks and models from vehicle manufacturers listed in this catalogue are for comparison purposes only, and may not be used in invoices.

KNORR

ANDTECH No :	0810 10370
Org. Ref. No :	
Application :	SB 6..., SB7...
Description :	Caliper Sensor Holder (Short)
1- T497	Sensor Pin (Short)

ANDTECH No :	0810 10371
Org. Ref. No :	
Application :	SB 7..., SN7...
Description :	Caliper Sensor Holder (Long)
1- T498	Sensor Pin (Long)

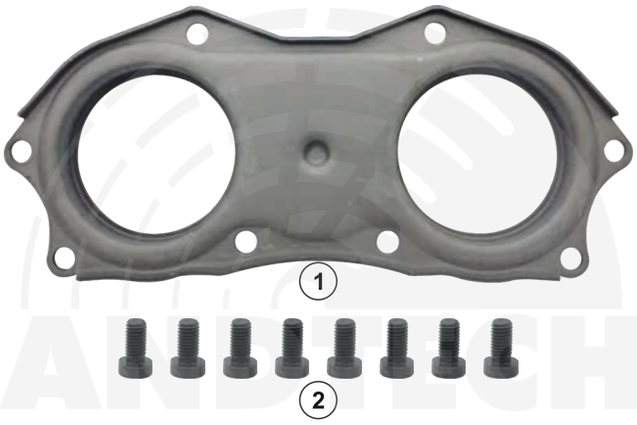

ANDTECH No :	0810 10165
Org. Ref. No :	
Application :	SN 6..., SN 7..., SK 7..., SM 7...
Description :	Caliper Cover
1- S73	Cover
2- C7	Cover Screw

ANDTECH No :	0810 10166
Org. Ref. No :	
Application :	SN 6..., SN 7..., SL 7...
Description :	Caliper Cover
1- S74	Cover
2- C7	Cover Screw
3- C50	Cover Screw

www.andacotomotiv.com

All original numbers, marks and models from vehicle manufacturers listed in this catalogue are for comparison purposes only, and may not be used in invoices.

KNORR

ANDTECH No :	0810 10397
Org. Ref. No :	K017549 M2 - M1
Application :	SL 7 New Version
Description :	Caliper Cover
1- S226	Cover

ANDTECH No :	0810 10167
Org. Ref. No :	
Application :	SN 5...
Description :	Caliper Cover
1- S75	Cover
2- C7	Cover Screw

ANDTECH No :	0810 10271
Org. Ref. No :	
Application :	SN 5...
Description :	Caliper Cover
1- S75	Cover
2- C7	Cover Screw
3- K112	Dust Cover

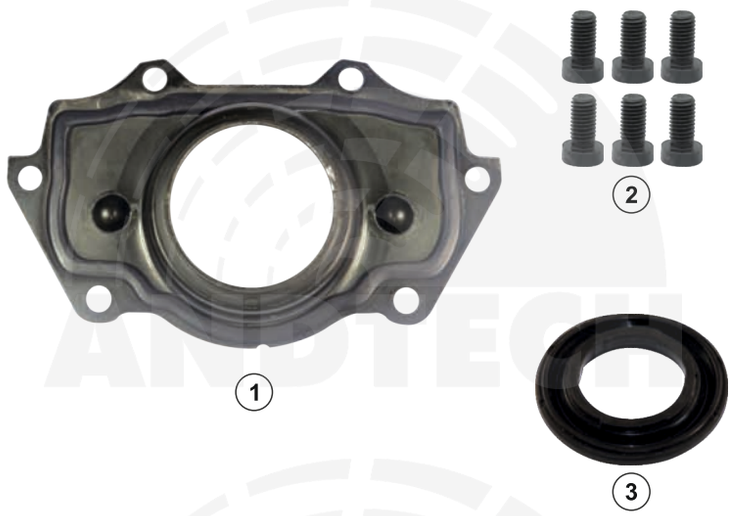

ANDTECH No :	0810 10272
Org. Ref. No :	
Application :	SN 5...
Description :	Caliper Seal
1- K112	Dust Cover

www.andacotomotiv.com

All original numbers, marks and models from vehicle manufacturers listed in this catalogue are for comparison purposes only, and may not be used in invoices.

KNORR

ANDTECH No :	0810 10273
Org. Ref. No :	
Application :	SB 6..., SB 7...
Description :	Caliper Repair Kit
1- T52	Lever (93°)
2- T12	Bridge
3- T200	Lever Pin
4- S61	Metal Sheet
5- T14	Calibration Bolt 3 Thread
6- Y3	Bridge Spring
7- K3T2	Tappet and Boot (74mm)
8- K4	Dust Cover
9- B1	Bush
10- R14	Roller Bearing
11- T386	Adjusting Mechanism
12- T130	Mechanism Gear
13- T20	Calibration Loaf
14- T121	Adjusting Mechanism
15- T118	Caliper Chain 29 Link

ANDTECH No :	0810 10274
Org. Ref. No :	
Application :	SB 6..., SB 7...
Description :	Caliper Repair Kit
1- T18	Lever
2- T12	Bridge
3- T200	Lever Pin
4- S61	Metal Sheet
5- T14	Calibration Bolt 3 Thread
6- Y35	Bridge Spring
7- Y36	Bridge Spring
8- K3T2	Tappet and Boot (74mm)
9- K4	Dust Cover
10- B1	Bush
11- R14	Roller Bearing
12- T386	Adjusting Mechanism
13- T130	Mechanism Gear
14- T20	Calibration Loaf
15- T121	Adjusting Mechanism
16- T118	Caliper Chain 29 Link

www.andacotomotiv.com

All original numbers, marks and models from vehicle manufacturers listed in this catalogue are for comparison purposes only, and may not be used in invoices.

KNORR

ANDTECH No :	0810 10275
Org. Ref. No :	
Application :	SN 7...
Description :	Caliper Repair Kit
1- T215	Lever
2- T11	Bridge
3- T200	Lever Pin
4- S61	Metal Sheet
5- T14	Calibration Bolt 3 Thread
6- Y3	Bridge Spring
7- K1T1	Tappet and Boot (69mm)
8- K2	Dust Cover
9- B1	Bush
10- R15	Roller Bearing
11- T386	Adjusting Mechanism
12- T130	Mechanism Gear
13- T20	Calibration Loaf
14- T121	Adjusting Mechanism
15- T118	Caliper Chain 29 Link

ANDTECH No :	0810 10276
Org. Ref. No :	
Application :	SN 7...
Description :	Caliper Repair Kit
1- T216	Lever
2- T13	Bridge
3- T14	Calibration Bolt 3 Thread
4- Y3	Bridge Spring
5- K1T1	Tappet and Boot (69mm)
6- K2	Dust Cover
7- B1	Bush
8- R15	Roller Bearing
9- T386	Adjusting Mechanism
10- T130	Mechanism Gear
11- T20	Calibration Loaf
12- T121	Adjusting Mechanism
13- T118	Caliper Chain 29 Link

www.andacotomotiv.com

All original numbers, marks and models from vehicle manufacturers listed in this catalogue are for comparison purposes only, and may not be used in invoices.

KNORR

ANDTECH No :	0810 10277
Org. Ref. No :	
Application :	SL 7..., SM 7...
Description :	Caliper Repair Kit
1- T220	Lever
2- T13	Bridge
3- T207	Calibration Bolt 3 Thread
4- Y3	Bridge Spring
5- K1T62	Tappet and Boot (69mm)
6- K2	Dust Cover
7- B11	Bush
8- R17	Roller Bearing
9- T386	Adjusting Mechanism
10- T130	Mechanism Gear
11- T20	Calibration Loaf
12- T209	Adjusting Mechanism
13- T118	Caliper Chain 29 Link

ANDTECH No :	0810 10278
Org. Ref. No :	
Application :	SN 6..., SK 7..., ADB22X
Description :	Caliper Repair Kit
1- T15	Lever
2- T11	Bridge
3- T200	Lever Pin
4- S61	Metal Sheet
5- T14	Calibration Bolt 3 Thread
6- Y3	Bridge Spring
7- K1T1	Tappet and Boot (69mm)
8- K2	Dust Cover
9- B1	Bush
10- R15	Roller Bearing
11- T386	Adjusting Mechanism
12- T130	Mechanism Gear
13- T20	Calibration Loaf
14- T121	Adjusting Mechanism
15- T118	Caliper Chain 29 Link

www.andacotomotiv.com

All original numbers, marks and models from vehicle manufacturers listed in this catalogue are for comparison purposes only, and may not be used in invoices.

KNORR

ANDTECH No :	0810 10279
Org. Ref. No :	
Application :	SK 7..., ADB22X
Description :	Caliper Repair Kit
1- T19	Lever
2- T13	Bridge
3- T14	Calibration Bolt 3 Thread
4- Y3	Bridge Spring
5- K1T1	Tappet and Boot (69mm)
6- K2	Dust Cover
7- B1	Bush
8- R15	Roller Bearing
9- T386	Adjusting Mechanism
10- T130	Mechanism Gear
11- T20	Calibration Loaf
12- T208	Adjusting Mechanism
13- T118	Caliper Chain 29 Link

ANDTECH No :	0810 10280
Org. Ref. No :	
Application :	SB 6..., SN 6...
Description :	Caliper Repair Kit
1- T17	Lever
2- T12	Bridge
3- T200	Lever Pin
4- S61	Metal Sheet
5- T14	Calibration Bolt 3 Thread
6- Y3	Bridge Spring
7- K3T2	Tappet and Boot (74mm)
8- K4	Dust Cover
9- B1	Bush
10- R14	Roller Bearing
11- T386	Adjusting Mechanism
12- T130	Mechanism Gear
13- T20	Calibration Loaf
14- T121	Adjusting Mechanism
15- T118	Caliper Chain 29 Link

www.andacotomotiv.com

KNORR

ANDTECH No :	0810 10281
Org. Ref. No :	
Application :	SB 7..., SN 7...
Description :	Caliper Repair Kit
1- T16	Lever
2- T11	Bridge
3- T200	Lever Pin
4- S61	Metal Sheet
5- T14	Calibration Bolt 3 Thread
6- Y3	Bridge Spring
7- K1T1	Tappet and Boot (69mm)
8- K2	Dust Cover
9- B1	Bush
10- R15	Roller Bearing
11- T386	Adjusting Mechanism
12- T130	Mechanism Gear
13- T20	Calibration Loaf
14- T121	Adjusting Mechanism
15- T118	Caliper Chain 29 Link

ANDTECH No :	0810 10282
Org. Ref. No :	
Application :	SB 7..., SN 7...
Description :	Caliper Repair Kit
1- T217	Lever
2- T13	Bridge
3- T14	Calibration Bolt 3 Thread
4- Y3	Bridge Spring
5- K1T1	Tappet and Boot (69mm)
6- K2	Dust Cover
7- B1	Bush
8- R15	Roller Bearing
9- T386	Adjusting Mechanism
10- T130	Mechanism Gear
11- T20	Calibration Loaf
12- T208	Adjusting Mechanism
13- T118	Caliper Chain 29 Link

www.andacotomotiv.com

All original numbers, marks and models from vehicle manufacturers listed in this catalogue are for comparison purposes only, and may not be used in invoices.

KNORR

ANDTECH No :	0810 10283
Org. Ref. No :	
Application :	SB 6..., SB 7...,
Description :	Caliper Repair Kit
1- T218	Lever
2- T12	Bridge
3- T200	Lever Pin
4- S61	Metal Sheet
5- T14	Calibration Bolt 3 Thread
6- Y3	Bridge Spring
7- K3T2	Tappet and Boot (74mm)
8- K4	Dust Cover
9- B1	Bush
10- R14	Roller Bearing
11- T386	Adjusting Mechanism
12- T130	Mechanism Gear
13- T20	Calibration Loaf
14- T121	Adjusting Mechanism
15- T118	Caliper Chain 29 Link

ANDTECH No :	0810 10284
Org. Ref. No :	
Application :	SN 6..., SN 7...
Description :	Caliper Repair Kit
1- T219	Lever
2- T12	Bridge
3- T200	Lever Pin
4- S61	Metal Sheet
5- T14	Calibration Bolt 3 Thread
6- Y3	Bridge Spring
7- K3T2	Tappet and Boot (74mm)
8- K4	Dust Cover
9- B1	Bush
10- R14	Roller Bearing
11- T386	Adjusting Mechanism
12- T130	Mechanism Gear
13- T20	Calibration Loaf
14- T121	Adjusting Mechanism
15- T118	Caliper Chain 29 Link

www.andacotomotiv.com

KNORR

ANDTECH No :	0810 10285
Org. Ref. No :	
Application :	SN 5...
Description :	Caliper Repair Kit
1- T221	Lever
2- T199	Guide Pin Ø30x99mm
3- C44	Screw M16x1.5x105mm
4- T198	Guide Pin Ø30x72mm
5- C43	Screw M16x1.5x72mm
6- B34	Bush
7- B35	Bush
8- K14	Boot
9- P12	Ring (Plastic)
10- S60	Metal Tap
11- K1T124	Tappet and Boot (69mm)
12- K112	Dust Cover
13- B1	Bush
14- T123	Adjusting Mechanism
15- T130	Mechanism Gear
16- T245	Pinion Shaft
17- T14	Calibration Bolt 3 Thread
18- R16	Roller Bearing
19- T119	Caliper Chain 14 Link
20- S75	Cover
21- C7	Cover Screw
22- T99	Bridge
23- Y37	Bridge Spring

www.andacotomotiv.com

All original numbers, marks and models from vehicle manufacturers listed in this catalogue are for comparison purposes only, and may not be used in invoices.

KNORR

ANDTECH No :	0810 10286
Org. Ref. No :	
Application :	SN 5...
Description :	Caliper Repair Kit
1- T221	Lever
2- K1T124	Tappet and Boot (69mm)
3- K112	Dust Cover
4- B1	Bush
5- T123	Adjusting Mechanism
6- T130	Mechanism Gear
7- T245	Pinion Shaft
8- T14	Calibration Bolt 3 Thread
9- R16	Roller Bearing
10- T119	Caliper Chain 14 Link
11- S75	Cover
12- C7	Cover Screw
13- T99	Bridge
14- Y37	Bridge Spring

www.andacotomotiv.com

KNORR

ANDTECH No :	0810 10287
Org. Ref. No :	
Application :	SB 5...
Description :	Caliper Repair Kit
1- T222	Lever
2- T5	Guide Pin Ø36x145mm
3- C1	Screw M16x1.5x150mm
4- T6	Guide Pin Ø34x80mm
5- C2	Screw M16x1.5x87mm
6- K11	Rubber Bush
7- K9	Boot
8- P1	Teflon Ring
9- K10	Boot
10- S21	Clamp
11- B2	Bush
12- T123	Adjusting Mechanism
13- T130	Mechanism Gear
14- T14	Calibration Bolt 3 Thread
15- T214	Pinion Shaft
16- T210	Caliper Chain 12 Link
17- K3T2	Tappet and Boot (74mm)
18- K4	Dust Cover
19- B1	Bush
20- R14	Roller Bearing
21- T66	Bridge
22- Y37	Bridge Spring

www.andacotomotiv.com

All original numbers, marks and models from vehicle manufacturers listed in this catalogue are for comparison purposes only, and may not be used in invoices.

KNORR

ANDTECH No :	0810 10288
Org. Ref. No :	
Application :	SB 5...
Description :	Caliper Repair Kit
1- T222	Lever
2- T123	Adjusting Mechanism
3- T130	Mechanism Gear
4- T14	Calibration Bolt 3 Thread
5- T214	Pinion Shaft
6- T210	Caliper Chain 12 Link
7- K3T2	Tappet and Boot (74mm)
8- K4	Dust Cover
9- B1	Bush
10- R14	Roller Bearing
11- T66	Bridge
12- Y37	Bridge Spring

ANDTECH No :	0810 10168
Org. Ref. No :	
Application :	SB 6..., SB 7...
Description :	Caliper Repair Kit
1- T5	Guide Pin Ø36x145mm
2- C1	Screw M16x1,5x150mm
3- T6	Guide Pin Ø34x80mm
4- C2	Screw M16x1,5x87mm
5- K3T2	Tappet and Boot (74mm)
6- K4	Dust Cover
7- B1	Bush
8- B2	Bush
9- K11	Rubber Bush
10- K12	Rubber Cap (Ø38mm)
11- K10	Boot
12- K9	Boot
13- P1	Teflon Ring
14- S21	Clamp
15- K15	Rubber Tap

www.andacotomotiv.com

KNORR

ANDTECH No :	0810 10190
Org. Ref. No :	
Application :	SN 6..., SN 7..., SK 7...
Description :	Caliper Repair Kit
1- T3	Guide Pin Ø36x114mm
2- C2	Screw M16x1,5x87mm
3- T4	Guide Pin Ø32x80mm
4- C3	Screw M16x1,5x80mm
5- K1T1	Tappet and Boot (69mm)
6- K2	Dust Cover
7- B1	Bush
8- B2	Bush
9- K5	Metal-Rubber Bush (Long) (Ø39mm)
10- K15	Rubber Tap
11- K9	Boot
12- S1	Pin Cap
13- K12	Rubber Cap (Ø38mm)
14- P1	Teflon Ring
15- S10	Metal Tap

ANDTECH No :	0810 10191
Org. Ref. No :	
Application :	SK 7...
Description :	Caliper Repair Kit
1- T3	Guide Pin Ø36x114mm
2- C2	Screw M16x1,5x87mm
3- T7	Guide Pin Ø36x64mm
4- C8	Screw M16x1,5x70mm
5- K1T1	Tappet and Boot (69mm)
6- K2	Dust Cover
7- B1	Bush
8- B2	Bush
9- B16	Bush (Slotted)
10- K15	Rubber Tap
11- K12	Rubber Cap (Ø38mm)
12- K9	Boot
13- P1	Teflon Ring
14- S10	Metal Tap
15- S16	Metal Tap

www.andacotomotiv.com

All original numbers, marks and models from vehicle manufacturers listed in this catalogue are for comparison purposes only, and may not be used in invoices.

KNORR

ANDTECH No :	0810 10169
Org. Ref. No :	
Application :	SB 6..., SB 7...
Description :	Caliper Repair Kit
1- T5	Guide Pin Ø36x145mm
2- C1	Screw M16x1,5x150mm
3- T3	Guide Pin Ø36x114mm
4- C2	Screw M16x1,5x87mm
5- T6	Guide Pin Ø34x80mm
6- K9	Boot
7- P1	Teflon Ring
8- K10	Boot
9- S21	Clamp
10- K12	Rubber Cap (Ø38mm)
11- K15	Rubber Tap
12- S2	Metal Cap
13- K8	O-Ring
14- T20	Calibration Loaf
15- K11	Rubber Bush
16- B2	Bush

ANDTECH No :	0810 10197
Org. Ref. No :	K000365-0004202282
Application :	SB 7...
Description :	Caliper Repair Kit
1- T3	Guide Pin Ø36x114mm
2- C2	Screw M16x1,5x87mm
3- T4	Guide Pin Ø32x80mm
4- C3	Screw M16x1,5x80mm
5- T6	Guide Pin Ø34x80mm
6- B2	Bush
7- K11	Rubber Bush
8- K7	Metal-Rubber Bush (Short) (Ø39mm)
9- S2	Metal Cap
10- K8	O-Ring
11- K9	Boot
12- P1	Teflon Ring
13- S10	Metal Tap

ANDTECH No :	0810 10303
Org. Ref. No :	K001470-0004203482
Application :	SB 7...
Description :	Caliper Repair Kit
1- T3	Guide Pin Ø36x114mm
2- C2	Screw M16x1,5x87mm
3- T4	Guide Pin Ø32x80mm
4- C3	Screw M16x1,5x80mm
5- T6	Guide Pin Ø34x80mm
6- B2	Bush
7- K11	Rubber Bush
8- K5	Metal-Rubber Bush (Long) (Ø39mm)
9- S2	Metal Cap
10- K8	O-Ring
11- K9	Boot
12- P1	Teflon Ring
13- S10	Metal Tap
14- S1	Pin Cap

www.andacotomotiv.com

KNORR

ANDTECH No :	0810 10171
Org. Ref. No :	
Application :	SB 6..., SB 7...
Description :	Caliper Repair Kit
1- T5	Guide Pin Ø36x145mm
2- C1	Screw M16x1,5x150mm
3- T6	Guide Pin Ø34x80mm
4- C2	Screw M16x1,5x87mm
5- K9	Boot
6- P1	Teflon Ring
7- K10	Boot
8- S21	Clamp
9- K12	Rubber Cap (Ø38mm)
10- K15	Rubber Tap
11- T20	Calibration Loaf
12- K11	Rubber Bush
13- B2	Bush

ANDTECH No :	0810 10172
Org. Ref. No :	II328090062 - II339680062 - II369100062 0004200782 - 0004201282 - 81508226009 1390427-1448915-93162048-0501211763
Application :	SB6..., SB 7...
Description :	Caliper Repair Kit
1- T5	Guide Pin Ø36x145mm
2- C1	Screw M16x1,5x150mm
3- T6	Guide Pin Ø34x80mm
4- C2	Screw M16x1,5x87mm
5- K11	Rubber Bush
6- K9	Boot
7- P1	Teflon Ring
8- K10	Boot
9- S21	Clamp
10- B2	Bush

ANDTECH No :	0810 10173
Org. Ref. No :	K000687 - 1603326
Application :	SB 7..., SN 7...
Description :	Caliper Repair Kit
1- T5	Guide Pin Ø36x145mm
2- C1	Screw M16x1,5x150mm
3- T4	Guide Pin Ø32x80mm
4- C3	Screw M16x1,5x80mm
5- K9	Boot
6- P1	Teflon Ring
7- K7	Metal-Rubber Bush (Short) (Ø39mm)
8- K10	Boot
9- S21	Clamp
10- B2	Bush

www.andacotomotiv.com

All original numbers, marks and models from vehicle manufacturers listed in this catalogue are for comparison purposes only, and may not be used in invoices.

KNORR

ANDTECH No :	0810 10174
Org. Ref. No :	K000935
Application :	SB 6..., SB 7...
Description :	Caliper Repair Kit
1- T5	Guide Pin Ø36x145mm
2- C1	Screw M16x1,5x150mm
3- K9	Boot
4- P1	Teflon Ring
5- K10	Boot
6- S21	Clamp
7- B2	Bush

ANDTECH No :	0810 10290
Org. Ref. No :	II358510062 - 1415149 0004201182 - 0501211047
Application :	SB 7...
Description :	Caliper Repair Kit
1- T5	Guide Pin Ø36x145mm
2- C1	Screw M16x1.5x150mm
3- T211	Guide Pin Ø34x120mm
4- C16	Screw M16x1.5x125mm
5- K10	Boot
6- S21	Clamp
7- K53	Rubber Bush
8- B2	Bush
9- K9	Boot
10- P1	Teflon Ring

ANDTECH No :	0810 10179
Org. Ref. No :	
Application :	SB 7...
Description :	Caliper Repair Kit
1- T5	Guide Pin Ø36x145mm
2- C1	Screw M16x1,5x150mm
3- T211	Guide Pin Ø34x120mm
4- C16	Screw M16x1,5x125mm
5- K10	Boot
6- K53	Rubber Bush
7- S21	Clamp
8- B2	Bush

www.andacotomotiv.com

All original numbers, marks and models from vehicle manufacturers listed in this catalogue are for comparison purposes only, and may not be used in invoices.

KNORR

ANDTECH No :	0810 10175
Org. Ref. No :	
Application :	SB 6..., SB 7..., SN 7...
Description :	Caliper Repair Kit
1- T5	Guide Pin Ø36x145mm
2- C1	Screw M16x1,5x150mm
3- T6	Guide Pin Ø34x80mm
4- C2	Screw M16x1,5x87mm
5- B2	Bush

ANDTECH No :	0810 10289
Org. Ref. No :	
Application :	SB 6..., SB 7...
Description :	Caliper Repair Kit
1- T5	Guide Pin Ø36x145mm
2- C1	Screw M16x1.5x150mm
3- T6	Guide Pin Ø34x80mm
4- C2	Screw M16x1.5x87mm
5- K11	Rubber Bush

ANDTECH No :	0810 10176
Org. Ref. No :	K000132-II304130062 97131439
Application :	SB 6..., SB 7...
Description :	Caliper Repair Kit
1- T10	Guide Pin Ø36x135mm
2- C4	Screw M16x1,5x140mm
3- T6	Guide Pin Ø34x80mm
4- C2	Screw M16x1,5x87mm
5- K11	Rubber Bush
6- K10	Boot
7- S21	Clamp
8- K9	Boot
9- P1	Teflon Ring
10- B2	Bush

www.andacotomotiv.com

All original numbers, marks and models from vehicle manufacturers listed in this catalogue are for comparison purposes only, and may not be used in invoices.

KNORR

ANDTECH No :	0810 10177
Org. Ref. No :	
Application :	SB 6..., SB 7...
Description :	Caliper Repair Kit
1- T10	Guide Pin Ø36x135mm
2- T6	Guide Pin Ø34x80mm
3- B2	Bush
4- K11	Rubber Bush
5- K9	Boot
6- P1	Teflon Ring
7- K10	Boot
8- S21	Clamp

ANDTECH No :	0810 10178
Org. Ref. No :	II179320062
Application :	SB 7...
Description :	Caliper Repair Kit
1- T10	Guide Pin Ø36x135mm
2- C4	Screw M16x1,5x140mm
3- T211	Guide Pin Ø34x120mm
4- C16	Screw M16x1.5x125mm
5- K53	Rubber Bush
6- K55	Boot
7- K56	Boot
8- S21	Clamp
9- B2	Bush

ANDTECH No :	0810 10180
Org. Ref. No :	II197140062
Application :	SB 7...
Description :	Caliper Repair Kit
1- T10	Guide Pin Ø36x135mm
2- C4	Screw M16x1,5x140mm
3- T6	Guide Pin Ø34x80mm
4- C2	Screw M16x1,5x87mm
5- K11	Rubber Bush
6- K55	Boot
7- S21	Clamp
8- K58	Rubber Tap
9- B2	Bush

www.andacotomotiv.com

KNORR

ANDTECH No :	0810 10181
Org. Ref. No :	II197330062 - 1390426
Application :	SB 7...
Description :	Caliper Repair Kit
1- T10	Guide Pin Ø36x135mm
2- C4	Screw M16x1,5x140mm
3- T6	Guide Pin Ø34x80mm
4- C2	Screw M16x1,5x87mm
5- K11	Rubber Bush
6- K55	Boot
7- K56	Boot
8- S21	Clamp
9- B2	Bush

ANDTECH No :	0810 10291
Org. Ref. No :	
Application :	SB 7...
Description :	Caliper Repair Kit
1- T211	Guide Pin Ø34x120mm
2- C16	Screw M16x1.5x125mm
3- K53	Rubber Bush

ANDTECH No :	0810 10193
Org. Ref. No :	K031844K50 - 1906779 - K011117
Application :	SB 6..., SB 7...
Description :	Caliper Repair Kit
1- T3	Guide Pin Ø36x114mm
2- C2	Screw M16x1,5x87mm
3- T213	Guide Pin Ø32x84mm
4- C3	Screw M16x1,5x80mm
5- K9	Boot
6- P1	Teflon Ring
7- B2	Bush
8- S2	Metal Cap
9- K8	O-Ring
10- S10	Metal Tap
11- K39	Metal-Rubber Bush (Short)
12- K110	Boot
13- P28	Teflon Ring
14- S121	Metal Cap

www.andacotomotiv.com

All original numbers, marks and models from vehicle manufacturers listed in this catalogue are for comparison purposes only, and may not be used in invoices.

KNORR

ANDTECH No :	0810 10402
Org. Ref. No :	2286677 - K105599K55
Application :	SB 6..., SB 7..., SCANIA BUS4 Series
Description :	Caliper Repair Kit
1- T638	Guide Pin Ø36x114mm
2- C2	Screw M16x1,5x87mm
3- T213	Guide Pin Ø32x84mm
4- C3	Screw M16x1,5x80mm
5- K9	Boot
6- P1	Teflon Ring
7- B2	Bush
8- S2	Metal Cap
9- K8	O-Ring
10- S10	Metal Tap
11- K39	Metal-Rubber Bush (Short)
12- K110	Boot
13- P28	Teflon Ring
14- S121	Metal Cap

ANDTECH No :	0810 10192
Org. Ref. No :	K067417K50 - 3434382000
Application :	SB 6..., SB 7..., SN 7...
Description :	Caliper Repair Kit
1- T3	Guide Pin Ø36x114mm
2- C2	Screw M16x1,5x87mm
3- T4	Guide Pin Ø32x80mm
4- C3	Screw M16x1,5x80mm
5- S2	Metal Cap
6- K8	O-Ring
7- K6	Metal-Rubber Bush (Long) (Ø35mm)
8- T57	Ring (Ø39mm)
9- S1	Pin Cap
10- K9	Boot
11- P1	Teflon Ring
12- B2	Bush
13- S10	Metal Tap

ANDTECH No :	0810 10198
Org. Ref. No :	K000472 - 42541412 - 81508226019 - 81508226034 - 1527631 - 3434381200 - 0004203482
Application :	SN 6..., SN 7..., SK 7...
Description :	Caliper Repair Kit (Old Model)
1- T3	Guide Pin Ø36x114mm
2- C2	Screw M16x1,5x87mm
3- T4	Guide Pin Ø32x80mm
4- C3	Screw M16x1,5x80mm
5- K9	Boot
6- P1	Teflon Ring
7- S1	Pin Cap
8- S10	Metal Tap
9- K5	Metal-Rubber Bush (Long) (Ø39mm)
10- B2	Bush

www.andacotomotiv.com

KNORR

ANDTECH No :	0810 10199
Org. Ref. No :	K000472 - 42541412 - 81508226019
Application :	SN 6..., SN 7..., SK 7..., SL 7..., SM 7...
Description :	Caliper Repair Kit (New Model)
1- T3	Guide Pin Ø36x114mm
2- C2	Screw M16x1,5x87mm
3- T244	Guide Pin Ø32x88,50mm
4- C3	Screw M16x1,5x80mm
5- K9	Boot
6- P1	Teflon Ring
7- S10	Metal Tap
8- K5	Metal-Rubber Bush (Long) (Ø39mm)
9- B2	Bush

ANDTECH No :	0810 10200
Org. Ref. No :	K000375
Application :	SB 6..., SB 7...
Description :	Caliper Repair Kit (Old Model)
1- T3	Guide Pin Ø36x114mm
2- C2	Screw M16x1,5x87mm
3- T4	Guide Pin Ø32x80mm
4- C3	Screw M16x1,5x80mm
5- S2	Metal Cap
6- K8	O-Ring
7- S1	Pin Cap
8- K5	Metal-Rubber Bush (Long) (Ø39mm)
9- K9	Boot
10- P1	Teflon Ring
11- B2	Bush

ANDTECH No :	0810 10201
Org. Ref. No :	K000375
Application :	SB 6..., SB 7...
Description :	Caliper Repair Kit (New Model)
1- T3	Guide Pin Ø36x114mm
2- C2	Screw M16x1,5x87mm
3- T244	Guide Pin Ø32x88,5mm
4- C3	Screw M16x1,5x80mm
5- S2	Metal Cap
6- K8	O-Ring
7- K5	Metal-Rubber Bush (Long) (Ø39mm)
8- K9	Boot
9- P1	Teflon Ring
10- B2	Bush

www.andacotomotiv.com

All original numbers, marks and models from vehicle manufacturers listed in this catalogue are for comparison purposes only, and may not be used in invoices.

KNORR

ANDTECH No :	0810 10202
Org. Ref. No :	K001532
Application :	SB 7...
Description :	Caliper Repair Kit (Old Model)
1- T3	Guide Pin Ø36x114mm
2- C2	Screw M16x1,5x87mm
3- T4	Guide Pin Ø32x80mm
4- C3	Screw M16x1,5x80mm
5- S2	Metal Cap
6- K8	O-Ring
7- S1	Pin Cap
8- K6	Metal-Rubber Bush (Long) (Ø35mm)
9- K9	Boot
10- P1	Teflon Ring
11- B2	Bush

ANDTECH No :	0810 10203
Org. Ref. No :	K001532
Application :	SB 7...
Description :	Caliper Repair Kit (New Model)
1- T3	Guide Pin Ø36x114mm
2- C2	Screw M16x1,5x87mm
3- T244	Guide Pin Ø32x88,5mm
4- C3	Screw M16x1,5x80mm
5- S2	Metal Cap
6- K8	O-Ring
7- K6	Metal-Rubber Bush (Long) (Ø35mm)
8- K9	Boot
9- P1	Teflon Ring
10- B2	Bush

ANDTECH No :	0810 10204
Org. Ref. No :	
Application :	SB 7...
Description :	Caliper Repair Kit
1- T3	Guide Pin Ø36x114mm
2- C2	Screw M16x1,5x87mm
3- T6	Guide Pin Ø34x80mm
4- K9	Boot
5- P1	Teflon Ring
6- S2	Metal Cap
7- K8	O-Ring
8- T20	Calibration Loaf
9- K12	Rubber Cap (Ø38mm)
10- K15	Rubber Tap
11- B2	Bush
12- K11	Rubber Bush

www.andacotomotiv.com

All original numbers, marks and models from vehicle manufacturers listed in this catalogue are for comparison purposes only, and may not be used in invoices.

KNORR

ANDTECH No :	0810 10207
Org. Ref. No :	II39769F0062-42537451
Application :	SB 6..., SB 7...
Description :	Caliper Repair Kit
1- T3	Guide Pin Ø36x114mm
2- C2	Screw M16x1,5x87mm
3- T6	Guide Pin Ø34x80mm
4- K9	Boot
5- P1	Teflon Ring
6- S2	Metal Cap
7- K8	O-Ring
8- B2	Bush
9- K11	Rubber Bush

ANDTECH No :	0810 10208
Org. Ref. No :	K001915 - K048389K50 - 1639100 - 81508226037 - 81.50822-6037
Application :	SB 6..., SB 7..., SN 6..., SN 7...
Description :	Caliper Repair Kit
1- T3	Guide Pin Ø36x114mm
2- C2	Screw M16x1,5x87mm
3- T4	Guide Pin Ø32x80mm
4- C3	Screw M16x1,5x80mm
5- K9	Boot
6- P1	Teflon Ring
7- S10	Metal Tap
8- K7	Metal-Rubber Bush (Short) (Ø39mm)
9- B2	Bush

ANDTECH No :	0810 10304
Org. Ref. No :	3434382000 - K048434K62
Application :	SN..., SB...
Description :	Caliper Repair Kit
1- T3	Guide Pin Ø36x114mm
2- C2	Screw M16x1.5x87mm
3- T4	Guide Pin Ø32x80
4- C3	Screw M16x1.5x80mm
5- S2	Metal Cap
6- K8	O-Ring
7- K113	Metal-Rubber Bush (Short) (Ø35mm)
8- T57	Ring Ø39mm
9- K9	Boot
10- P1	Teflon Ring
11- B2	Bush
12- S10	Metal Tap

www.andacotomotiv.com

All original numbers, marks and models from vehicle manufacturers listed in this catalogue are for comparison purposes only, and may not be used in invoices.

KNORR

ANDTECH No :	0810 10305
Org. Ref. No :	K048371K50
Application :	SB 6..., SB 7...
Description :	Caliper Repair Kit
1- T3	Guide Pin Ø36x114mm
2- C2	Screw M16x1.5x87mm
3- T4	Guide Pin Ø32x80
4- C3	Screw M16x1.5x80mm
5- S2	Metal Cap
6- K8	O-Ring
7- K7	Metal-Rubber Bush (Short) (Ø39mm)
8- K9	Boot
9- P1	Teflon Ring
10- B2	Bush

ANDTECH No :	0810 10306
Org. Ref. No :	K048396K50 - K118520 BENDIX
Application :	SB 6..., SB 7...
Description :	Caliper Repair Kit
1- T3	Guide Pin Ø36x114mm
2- C2	Screw M16x1.5x87mm
3- T4	Guide Pin Ø32x80
4- C3	Screw M16x1.5x80mm
5- S2	Metal Cap
6- K8	O-Ring
7- K113	Metal-Rubber Bush (Short) (Ø35mm)
8- K9	Boot
9- P1	Teflon Ring
10- B2	Bush

ANDTECH No :	0810 10194
Org. Ref. No :	K004100 - 3434381500 K010766 - 0004205082 - 803114 BENDIX
Application :	SK6...,SK 7..., SN 7..., ADB22X
Description :	Caliper Repair Kit
1- T3	Guide Pin Ø36x114mm
2- C2	Screw M16x1.5x87mm
3- T7	Guide Pin Ø36x64mm
4- C8	Screw M16x1.5x70mm
5- B2	Bush
6- B16	Bush
7- K9	Boot
8- P1	Teflon Ring
9- S10	Metal Tap
10- S16	Metal Tap

www.andacotomotiv.com

All original numbers, marks and models from vehicle manufacturers listed in this catalogue are for comparison purposes only, and may not be used in invoices.

KNORR

ANDTECH No :	0810 10372
Org. Ref. No :	K108002K50 - 3434382400
Application :	ST7..., Schmitz Trailer, ADB22XL
Description :	Caliper Repair Kit
1- T3	Guide Pin Ø36x114mm
2- C2	Screw M16x1.5x87mm
3- T532	Guide Pin Ø36x64mm
4- C8	Screw M16x1.5x70mm
5- B2	Bush
6- B17	Bush
7- K9	Boot
8- P1	Teflon Ring
9- S10	Metal Tap (40x12mm)
10- S16	Metal Tap (40x24mm)

ANDTECH No :	0810 10294
Org. Ref. No :	K010813 - 3434382400
Application :	SB 7..., ADB22X
Description :	Caliper Repair Kit
1- T3	Guide Pin Ø36x114mm
2- C2	Screw M16x1.5x87mm
3- T7	Guide Pin Ø36x64mm
4- C8	Screw M16x1.5x70mm
5- B2	Bush
6- B16	Bush
7- K9	Boot
8- P1	Teflon Ring
9- S16	Metal Tap
10- S2	Metal Cap
11- K8	O-Ring

ANDTECH No :	0810 10195
Org. Ref. No :	
Application :	SB 7..., SK 6..., SK 7..., SN 7..., ADB22X
Description :	Caliper Repair Kit
1- T7	Guide Pin Ø36x64mm
2- C8	Screw M16x1,5x70mm
3- K9	Boot
4- P1	Teflon Ring
5- B16	Bush (Slotted)
6- S16	Metal Tap

www.andacotomotiv.com

All original numbers, marks and models from vehicle manufacturers listed in this catalogue are for comparison purposes only, and may not be used in invoices.

KNORR

ANDTECH No :	0810 10189
Org. Ref. No :	K001274
Application :	SB 5..., SN 5...
Description :	Caliper Repair Kit
1- T212	Guide Pin Ø36x103mm
2- C2	Screw M16x1,5x87mm
3- T4	Guide Pin Ø32x80mm
4- C3	Screw M16x1,5x80mm
5- K5	Metal-Rubber Bush (Long) (Ø39mm)
6- K9	Boot
7- P1	Teflon Ring
8- S1	Pin Cap
9- S10	Metal Tap
10- B12	Bush

ANDTECH No :	0810 10315
Org. Ref. No :	K001925 - 0004204382 - K028451
Application :	SN 6..., SN 7..., SK 7...
Description :	Caliper Repair Kit
1- T212	Guide Pin Ø36x103mm
2- C2	Screw M16x1.5x87mm
3- T4	Guide Pin Ø32x80
4- C3	Screw M16x1.5x80mm
5- K7	Metal-Rubber Bush (Short) (Ø39mm)
6- K9	Boot
7- P1	Teflon Ring
8- S10	Metal Tap
9- B12	Bush

ANDTECH No :	0810 10188
Org. Ref. No :	K001928-81508226026
Application :	SN 5...
Description :	Caliper Repair Kit
1- T199	Guide Pin Ø30x99mm
2- C44	Screw M16x1,5x105mm
3- T198	Guide Pin Ø30x72mm
4- C43	Screw M16x1,5x75mm
5- B34	Bush
6- B35	Bush
7- K14	Boot
8- P12	Ring (Plastic)
9- S60	Metal Tap

www.andacotomotiv.com

KNORR

ANDTECH No :	0810 10209
Org. Ref. No :	
Application :	SB 7...
Description :	Caliper Repair Kit
1- T3	Guide Pin Ø36x114mm
2- C2	Screw M16x1,5x87mm
3- T6	Guide Pin Ø34x80mm
4- S2	Metal Cap
5- K8	O-Ring
6- B2	Bush

ANDTECH No :	0810 10214
Org. Ref. No :	
Application :	ALL SB ..., SN ..., SK ...
Description :	Caliper Repair Kit
1- T3	Guide Pin Ø36x114mm
2- C2	Screw M16x1,5x87mm
3- T4	Guide Pin Ø32x80mm
4- C3	Screw M16x1,5x80mm
5- K5	Metal-Rubber Bush (Long) (Ø39mm)
6- T56	Ring (Ø35mm)
7- S1	Pin Cap

ANDTECH No :	0810 10210
Org. Ref. No :	K000696 - II310370066 0024200383 - 0980102970
Application :	SB 7..., SN 7...
Description :	Caliper Repair Kit
1- T3	Guide Pin Ø36x114mm
2- C2	Screw M16x1,5x87mm
3- B2	Bush
4- S2	Metal Cap
5- K8	O-Ring
6- K9	Boot
7- P1	Teflon Ring

www.andacotomotiv.com

All original numbers, marks and models from vehicle manufacturers listed in this catalogue are for comparison purposes only, and may not be used in invoices.

KNORR

ANDTECH No :	0810 10182
Org. Ref. No :	
Application :	SB 6..., SB 7..., SN 7...
Description :	Caliper Repair Kit
1- T6	Guide Pin Ø34x80mm
2- C2	Screw M16x1,5x87mm
3- K11	Rubber Bush
4- K9	Boot
5- P1	Teflon Ring
6- K10	Boot
7- S21	Clamp

ANDTECH No :	0810 10211
Org. Ref. No :	
Application :	SB 6..., SB 7...
Description :	Caliper Repair Kit
1- T4	Guide Pin Ø32x80mm
2- C3	Screw M16x1,5x80mm
3- K5	Metal-Rubber Bush (Long) (Ø39mm)
4- K9	Boot
5- P1	Teflon Ring
6- S10	Metal Tap
7- S1	Pin Cap
8- B2	Bush

ANDTECH No :	0810 10212
Org. Ref. No :	
Application :	SN 6..., SN 7..., SK 7..., SL 7..., SM 7...
Description :	Caliper Repair Kit
1- T244	Guide Pin Ø32x88,5mm
2- C3	Screw M16x1,5x80mm
3- K5	Metal-Rubber Bush (Long) (Ø39mm)
4- K9	Boot
5- P1	Teflon Ring
6- S10	Metal Tap
7- B2	Bush

www.andacotomotiv.com

KNORR

ANDTECH No :	0810 10196
Org. Ref. No :	K013007
Application :	SK 7..., SN 7...
Description :	Caliper Repair Kit
1- T3	Guide Pin Ø36x114mm
2- C2	Screw M16x1,5x87mm
3- T7	Guide Pin Ø36x64mm
4- C8	Screw M16x1,5x70mm
5- S18	Washer
6- T9	Detent Pin
7- K12	Rubber Cap (Ø38mm)
8- S19	Cotter Pin
9- T20	Calibration Loaf
10- S16	Metal Tap
11- S10	Metal Tap
12- S17	Pad Retainer (20mm)
13- P1	Teflon Ring

ANDTECH No :	0810 10295
Org. Ref. No :	K012912
Application :	
Description :	Caliper Repair Kit
1- T3	Guide Pin Ø36x114mm
2- C2	Screw M16x1.5x87mm
3- T4	Guide Pin Ø32x80
4- C3	Screw M16x1.5x80mm
5- S18	Washer
6- T9	Detent Pin
7- K12	Rubber Cap (Ø38mm)
8- S19	Cotter Pin
9- T20	Calibration Loaf
10- S10	Metal Tap
11- S17	Pad Retainer (20mm)
12- P1	Teflon Ring

ANDTECH No :	0810 10296
Org. Ref. No :	K060760
Application :	SB 6..., SB 7...
Description :	Caliper Repair Kit
1- T3	Guide Pin Ø36x114mm
2- C2	Screw M16x1.5x87mm
3- T244	Guide Pin Ø32x88.5mm
4- C3	Screw M16x1.5x80mm
5- S2	Metal Cap
6- K8	O-Ring
7- S17	Pad Retainer (20mm)
8- S18	Washer
9- S19	Cotter Pin
10- T20	Calibration Loaf
11- T9	Detent Pin
12- P1	Teflon Ring
13- K12	Rubber Cap (Ø38mm)

www.andacotomotiv.com

All original numbers, marks and models from vehicle manufacturers listed in this catalogue are for comparison purposes only, and may not be used in invoices.

KNORR

ANDTECH No :	0810 10297
Org. Ref. No :	K006018
Application :	SN 7...
Description :	Caliper Repair Kit
1- T3	Guide Pin Ø36x114mm
2- C2	Screw M16x1.5x87mm
3- T4	Guide Pin Ø32x80
4- C3	Screw M16x1.5x80mm
5- S97	Metal Tap
6- S1	Pin Cap
7- S17	Pad Retainer (20mm)
8- S18	Washer
9- S19	Cotter Pin
10- T9	Detent Pin
11- P1	Teflon Ring
12- K12	Rubber Cap (Ø38mm)

ANDTECH No :	0810 10298
Org. Ref. No :	K048276
Application :	SB 7...
Description :	Caliper Repair Kit
1- T3	Guide Pin Ø36x114mm
2- C2	Screw M16x1.5x87mm
3- T4	Guide Pin Ø32x80
4- C3	Screw M16x1.5x80mm
5- S2	Metal Cap
6- K8	O-Ring
7- S17	Pad Retainer (20mm)
8- S18	Washer
9- S19	Cotter Pin
10- T20	Calibration Loaf
11- T9	Detent Pin
12- P1	Teflon Ring
13- K12	Rubber Cap (Ø38mm)

ANDTECH No :	0810 10299
Org. Ref. No :	K048278
Application :	SN 6...
Description :	Caliper Repair Kit
1- T3	Guide Pin Ø36x114mm
2- C2	Screw M16x1.5x87mm
3- T4	Guide Pin Ø32x80
4- C3	Screw M16x1.5x80mm
5- S97	Metal Tap
6- S1	Pin Cap
7- S17	Pad Retainer (20mm)
8- S18	Washer
9- S19	Cotter Pin
10- T20	Calibration Loaf
11- T9	Detent Pin
12- P1	Teflon Ring
13- K12	Rubber Cap (Ø38mm)

www.andacotomotiv.com

All original numbers, marks and models from vehicle manufacturers listed in this catalogue are for comparison purposes only, and may not be used in invoices.

KNORR

ANDTECH No :	0810 10300
Org. Ref. No :	K003459
Application :	SK 7..., SN 7...
Description :	Caliper Repair Kit
1- T212	Guide Pin Ø36x103mm
2- C2	Screw M16x1.5x87mm
3- T4	Guide Pin Ø32x80
4- C3	Screw M16x1.5x80mm
5- S97	Metal Tap
6- S92	Pad Retainer (25mm)
7- S18	Washer
8- S19	Cotter Pin
9- T20	Calibration Loaf
10- T9	Detent Pin
11- P1	Teflon Ring
12- K12	Rubber Cap (Ø38mm)

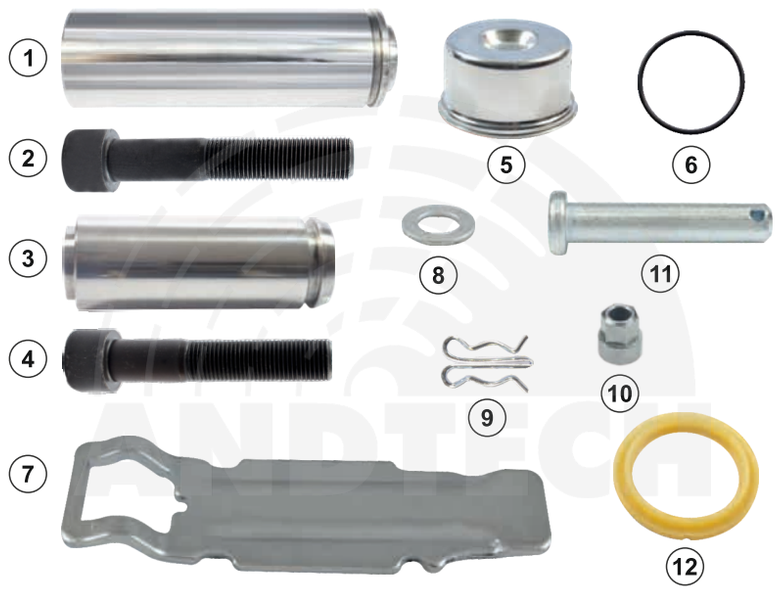

ANDTECH No :	0810 10301
Org. Ref. No :	K047473
Application :	SB 7...
Description :	Caliper Repair Kit
1- T3	Guide Pin Ø36x114mm
2- C2	Screw M16x1.5x87mm
3- T244	Guide Pin Ø32x88.5mm
4- C3	Screw M16x1.5x80mm
5- S2	Metal Cap
6- K8	O-Ring
7- S17	Pad Retainer (20mm)
8- S18	Washer
9- S19	Cotter Pin
10- T20	Calibration Loaf
11- T9	Detent Pin
12- P1	Teflon Ring

ANDTECH No :	0810 10258
Org. Ref. No :	
Application :	SB 6..., SB 7...
Description :	Caliper Repair Kit
1- K3T2	Tappet and Boot (74mm)
2- B1	Bush
3- K4	Dust Cover
4- K9	Boot
5- P1	Teflon Ring
6- K10	Boot
7- S21	Clamp
8- K11	Rubber Bush
9- K12	Rubber Cap (Ø38mm)
10- K15	Rubber Tap
11- K111	Seal
12- K57	Cover Gasket
13- K77	Dust Cover
14- Y3	Bridge Spring

www.andacotomotiv.com

All original numbers, marks and models from vehicle manufacturers listed in this catalogue are for comparison purposes only, and may not be used in invoices.

KNORR

ANDTECH No :	0810 10308
Org. Ref. No :	
Application :	SN 6..., SN 7..., SK 7...
Description :	Caliper Repair Kit
1- K1T1	Tappet and Boot (69mm)
2- B1	Bush
3- K2	Dust Cover
4- B2	Bush
5- K11	Rubber Bush
6- K9	Boot
7- P1	Teflon Ring
8- K10	Boot
9- S21	Clamp
10- S2	Metal Cap
11- K8	O-Ring
12- S1	Pin Cap
13- K12	Rubber Cap (Ø38mm)

ANDTECH No :	0810 10229
Org. Ref. No :	
Application :	SB 6..., SB 7...
Description :	Caliper Repair Kit
1- K3T2	Tappet and Boot (74mm)
2- K4	Dust Cover
3- B1	Bush
4- S1	Pin Cap
5- K12	Rubber Cap (Ø38mm)
6- K9	Boot
7- K10	Boot
8- S2	Metal Cap
9- P1	Teflon Ring
10- S21	Clamp
11- K8	O-Ring
12- K11	Rubber Bush
13- B2	Bush

ANDTECH No :	0810 10257
Org. Ref. No :	
Application :	SN ...
Description :	Caliper Repair Kit
1- K1T1	Tappet and Boot (69mm)
2- B1	Bush
3- K11	Rubber Bush
4- K9	Boot
5- P1	Teflon Ring
6- K10	Boot
7- S21	Clamp

www.andacotomotiv.com

KNORR

ANDTECH No :	0810 10309
Org. Ref. No :	
Application :	SB ...
Description :	Caliper Repair Kit
1- K3T2	Tappet and Boot (74mm)
2- B1	Bush
3- K9	Boot
4- P1	Teflon Ring
5- K10	Boot
6- S21	Clamp
7- K11	Rubber Bush

ANDTECH No :	0810 10213
Org. Ref. No :	
Application :	SN 5...
Description :	Caliper Repair Kit
1- K1T124	Tappet and Boot (69mm)
2- K112	Dust Cover
3- B1	Bush
4- K10	Boot
5- K11	Rubber Bush
6- S21	Clamp
7- K9	Boot
8- P1	Teflon Ring

ANDTECH No :	0810 10186
Org. Ref. No :	II368470064-II339830064 - 1448910
Application :	SB 5..., SB 6..., SB 7...
Description :	Caliper Repair Kit
1- T6	Guide Pin Ø34x80mm
2- C2	Screw M16x1,5x87mm
3- K11	Rubber Bush

www.andacotomotiv.com

All original numbers, marks and models from vehicle manufacturers listed in this catalogue are for comparison purposes only, and may not be used in invoices.

KNORR

ANDTECH No :	0810 10187
Org. Ref. No :	
Application :	SB 5..., SB 6..., SB 7...
Description :	Caliper Repair Kit
1- T6	Guide Pin Ø34x80mm
2- K11	Rubber Bush

ANDTECH No :	0810 10215
Org. Ref. No :	K000697
Application :	ALL SB ..., SN ..., SK ...
Description :	Caliper Repair Kit
1- T4	Guide Pin Ø32x80mm
2- C3	Screw M16x1,5x80mm
3- K5	Metal-Rubber Bush (Long) (Ø39mm)
4- S1	Pin Cap

ANDTECH No :	0810 10216
Org. Ref. No :	
Application :	ALL SB ..., SN ..., SK ..., SL ..., SM ...
Description :	Caliper Repair Kit (New Model)
1- T244	Guide Pin Ø32x88,50mm
2- C3	Screw M16x1,5x80mm
3- K5	Metal-Rubber Bush (Long) (Ø39mm)

ANDTECH No :	0810 10217
Org. Ref. No :	K000698
Application :	SB ...
Description :	Caliper Repair Kit
1- T4	Guide Pin Ø32x80mm
2- C3	Screw M16x1,5x80mm
3- K6	Metal-Rubber Bush (Long) (Ø35mm)
4- S1	Pin Cap

www.andacotomotiv.com

All original numbers, marks and models from vehicle manufacturers listed in this catalogue are for comparison purposes only, and may not be used in invoices.

KNORR

ANDTECH No :	0810 10218
Org. Ref. No :	
Application :	SB ...
Description :	Caliper Repair Kit (New Model)
1- T244	Guide Pin Ø32x88,50mm
2- C3	Screw M16x1,5x80mm
3- K6	Metal-Rubber Bush (Long) (Ø35mm)

ANDTECH No :	0810 10219
Org. Ref. No :	
Application :	ALL SB ..., SN ..., SK ...
Description :	Caliper Repair Kit
1- T4	Guide Pin Ø32x80mm
2- K5	Metal-Rubber Bush (Long) (Ø39mm)
3- S1	Pin Cap

ANDTECH No :	0810 10220
Org. Ref. No :	
Application :	ALL SB ..., SN ..., SK ..., SL ..., SM ...
Description :	Caliper Repair Kit (New Model)
1- T244	Guide Pin Ø32x88,50mm
2- K5	Metal-Rubber Bush (Long) (Ø39mm)

ANDTECH No :	0810 10221
Org. Ref. No :	
Application :	SB ...
Description :	Caliper Repair Kit
1- T4	Guide Pin Ø32x80mm
2- K6	Metal-Rubber Bush (Long) (Ø35mm)
3- S1	Pin Cap

www.andacotomotiv.com

All original numbers, marks and models from vehicle manufacturers listed in this catalogue are for comparison purposes only, and may not be used in invoices.

KNORR

ANDTECH No :	0810 10222
Org. Ref. No :	
Application :	SB ...
Description :	Caliper Repair Kit (New Model)
1- T244	Guide Pin Ø32x88,50mm
2- K6	Metal-Rubber Bush (Long) (Ø35mm)

ANDTECH No :	0810 10223
Org. Ref. No :	
Application :	SN 6..., SN 7...
Description :	Caliper Repair Kit
1- T4	Guide Pin Ø32x80mm
2- C3	Screw M16x1,5x80mm
3- K7	Metal-Rubber Bush (Short) (Ø39mm)

ANDTECH No :	0810 10224
Org. Ref. No :	
Application :	SN 6..., SN 7...
Description :	Caliper Repair Kit
1- T4	Guide Pin Ø32x80mm
2- K7	Metal-Rubber Bush (Short) (Ø39mm)

ANDTECH No :	0810 10302
Org. Ref. No :	
Application :	SB 6..., SB 7...
Description :	Caliper Repair Kit
1- T4	Guide Pin Ø32x80mm
2- C3	Screw M16x1,5x80mm
3- K113	Metal-Rubber Bush (Short) (Ø35mm)

www.andacotomotiv.com

All original numbers, marks and models from vehicle manufacturers listed in this catalogue are for comparison purposes only, and may not be used in invoices.

KNORR

ANDTECH No :	0810 10326
Org. Ref. No :	
Application :	SB 6..., SB 7...
Description :	Caliper Repair Kit
1- T4	Guide Pin Ø32x80mm
2- K113	Metal-Rubber Bush (Short) (Ø35mm)

ANDTECH No :	0810 10225
Org. Ref. No :	
Application :	ALL SB ..., SN ..., SK ..., SL ..., SM ...
Description :	Caliper Metal-Rubber Bush
1- K5	Metal-Rubber Bush (Long) (Ø39mm)

ANDTECH No :	0810 10226
Org. Ref. No :	
Application :	SB ...
Description :	Caliper Metal-Rubber Bush
1- K6	Metal-Rubber Bush (Long) (Ø35mm)

ANDTECH No :	0810 10227
Org. Ref. No :	
Application :	SN ...
Description :	Caliper Metal-Rubber Bush
1- K7	Metal-Rubber Bush (Short) (Ø39mm)

www.andacotomotiv.com

All original numbers, marks and models from vehicle manufacturers listed in this catalogue are for comparison purposes only, and may not be used in invoices.

KNORR

ANDTECH No :	0810 10307
Org. Ref. No :	
Application :	SB 6..., SB 7...
Description :	Caliper Metal-Rubber Bush
1- K113	Metal-Rubber Bush (Short) (Ø35mm)

ANDTECH No :	0810 10228
Org. Ref. No :	
Application :	SB 6..., SB 7...
Description :	Caliper Metal-Rubber Bush
1- K39	Metal-Rubber Bush (Short)

ANDTECH No :	0810 10237
Org. Ref. No :	
Application :	ALL SB, SN, SK, SL, SM
Description :	Caliper Lever Bearing
1- S20	Lever Bearing

ANDTECH No :	0810 10260
Org. Ref. No :	
Application :	SB 6..., SB 7..., SN 6..., SN 7...
Description :	Caliper Lever Bearing Kit
1- T200	Lever Pin
2- S20	Lever Bearing
3- S61	Metal Sheet

www.andacotomotiv.com

KNORR

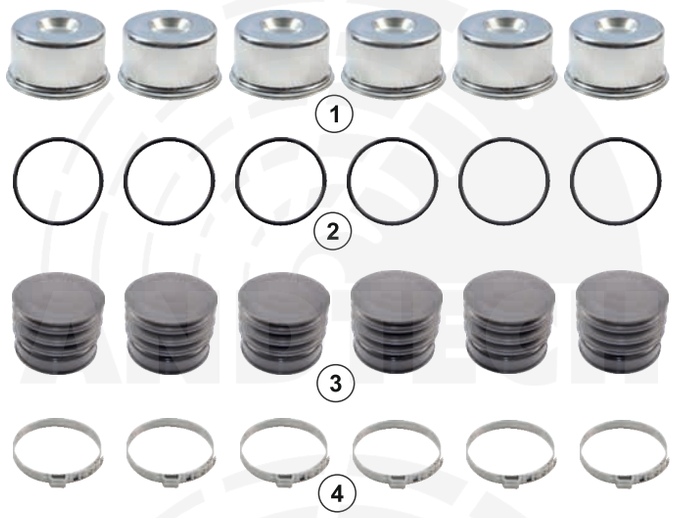

ANDTECH No :	0810 10230
Org. Ref. No :	K001301 - 81508226025
Application :	SB 7..., SN 7...
Description :	Caliper Boot and Metal Cap Repair Kit
1- S2	Metal Cap
2- K8	O-Ring
3- K10	Boot
4- S21	Clamp

ANDTECH No :	0810 10231
Org. Ref. No :	II39769F0063 - 3434380600
Application :	SB 7..., SN 7...
Description :	Caliper Metal Cap Kit
1- S2	Metal Cap
2- K8	O-Ring

ANDTECH No :	0810 10351
Org. Ref. No :	
Application :	SN 6..., SN 7..., SK 7…,SB7, ADB22X
Description :	Caliper Repair Kit
1- S10	Metal Tap Ø40x11mm
2- S16	Metal Tap Ø40x24mm

ANDTECH No :	0810 10232
Org. Ref. No :	K000945 - II17934004 81508226024 - 1439493
Application :	ALL SB, SN, SK, SL, SM
Description :	Caliper Adjusting Mechanism Cap Set
1- K12	Rubber Cap (Ø38mm)
2- K15	Rubber Tap
3- T20	Calibration Loaf

www.andacotomotiv.com

All original numbers, marks and models from vehicle manufacturers listed in this catalogue are for comparison purposes only, and may not be used in invoices.

KNORR

ANDTECH No :	0810 10233
Org. Ref. No :	K000029 - 0004234687 - 81508226021
Application :	ALL SB, SN, SK, SL, SM
Description :	Caliper Adjusting Mechanism Cap Set
1- K12	Rubber Cap (Ø38mm)
2- T20	Calibration Loaf

ANDTECH No :	0810 10234
Org. Ref. No :	K003902 - 802643 BENDIX - 3434381600
Application :	SN 6..., SN 7..., SK 7..., ADB22X
Description :	Caliper Adjusting Mechanism Cap Set
1- K13	Rubber Cap (Ø35mm)
2- T20	Calibration Loaf

ANDTECH No :	0810 10310
Org. Ref. No :	
Application :	SB7..., SN7...
Description :	Caliper Pad Retainer Repair Kit
1- S17	Pad Retainer (20mm)
2- S18	Washer
3- S19	Cotter Pin
4- T9	Detent Pin
5- K12	Rubber Cap (Ø38mm)
6- K15	Rubber Tap
7- T20	Calibration Loaf

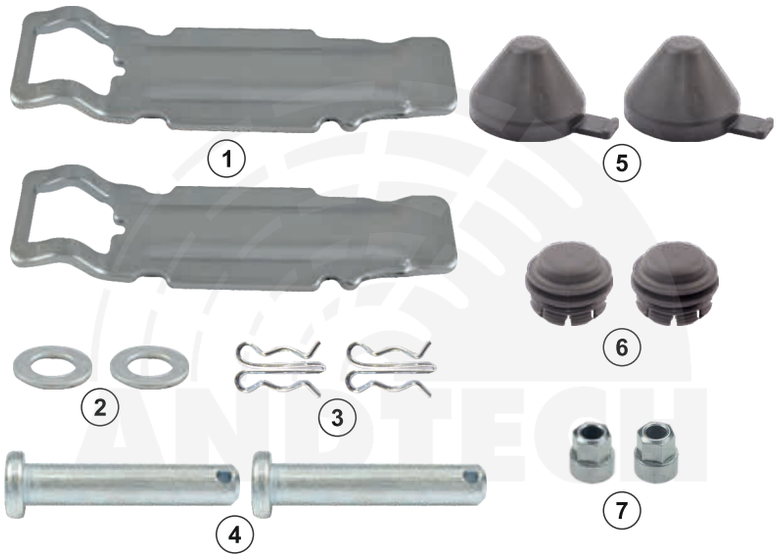

www.andacotomotiv.com

KNORR

ANDTECH No :	0810 10355
Org. Ref. No :	
Application :	SB7..., SN7..., ADB22X
Description :	Caliper Pad Retainer Repair Kit
1- S92	Pad Retainer (25mm)
2- S18	Washer
3- S19	Cotter Pin
4- T9	Detent Pin
5- K12	Rubber Cap (Ø38mm)
6- K15	Rubber Tap
7- T20	Calibration Loaf

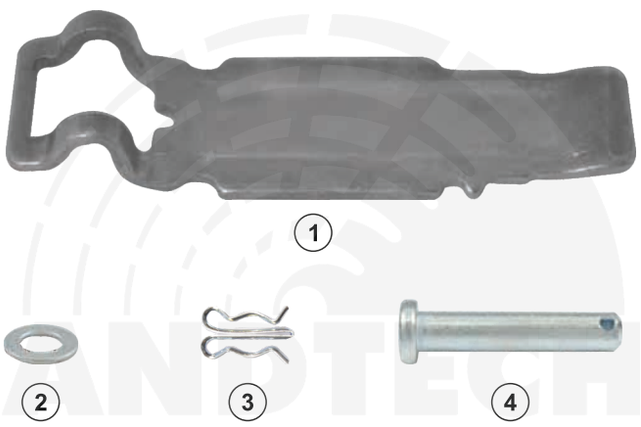

ANDTECH No :	0810 10311
Org. Ref. No :	K000133
Application :	SN5..., SB6..., SN6..., SK 7..., ADB22X
Description :	Caliper Pad Retainer Repair Kit
1- S92	Pad Retainer (25mm)
2- S18	Washer
3- S19	Cotter Pin
4- T9	Detent Pin

ANDTECH No :	0810 10235
Org. Ref. No :	
Application :	ALL SB, SN, SK, SL, SM
Description :	Caliper Pad Retainer Repair Kit
1- K12	Rubber Cap (Ø38mm)
2- S18	Washer
3- S19	Cotter Pin
4- T9	Detent Pin
5- K15	Rubber Tap
6- T20	Calibration Loaf

www.andacotomotiv.com

All original numbers, marks and models from vehicle manufacturers listed in this catalogue are for comparison purposes only, and may not be used in invoices.

KNORR

ANDTECH No :	0810 10236
Org. Ref. No :	II19712004 - K000129 6274200186 - 0004202482
Application :	SB7..., SN7...
Description :	Caliper Pad Retainer Repair Kit
1- S17	Pad Retainer (20mm)
2- S18	Washer
3- S19	Cotter Pin
4- T9	Detent Pin

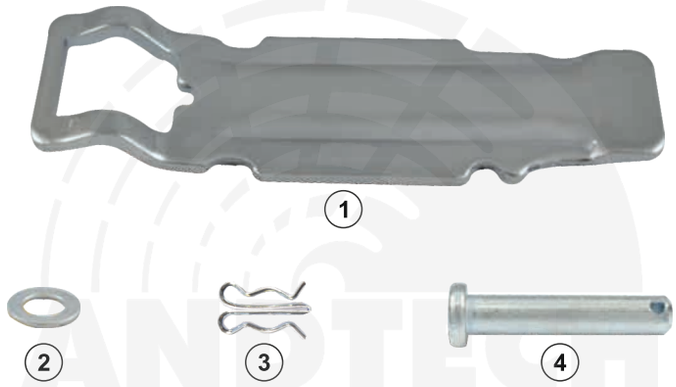

ANDTECH No :	0810 10312
Org. Ref. No :	II40929F
Application :	SN 6..., SN 7...
Description :	Caliper Repair Kit
1- T9	Detent Pin
2- S18	Washer
3- S19	Cotter Pin
4- T20	Calibration Loaf
5- S1	Pin Cap
6- K12	Rubber Cap (Ø38mm)
7- P1	Teflon Ring

ANDTECH No :	0810 10313
Org. Ref. No :	II40699F
Application :	SB 6..., SB 7..., SN 6...
Description :	Caliper Repair Kit
1- T9	Detent Pin
2- S18	Washer
3- S19	Cotter Pin
4- T20	Calibration Loaf
5- K8	O-Ring
6- K12	Rubber Cap (Ø38mm)
7- P1	Teflon Ring

ANDTECH No :	0810 10314
Org. Ref. No :	II40875F
Application :	SN 6...
Description :	Caliper Repair Kit
1- T9	Detent Pin
2- S18	Washer
3- S19	Cotter Pin
4- T20	Calibration Loaf
5- K12	Rubber Cap (Ø38mm)
6- P1	Teflon Ring

www.andacotomotiv.com

All original numbers, marks and models from vehicle manufacturers listed in this catalogue are for comparison purposes only, and may not be used in invoices.

KNORR

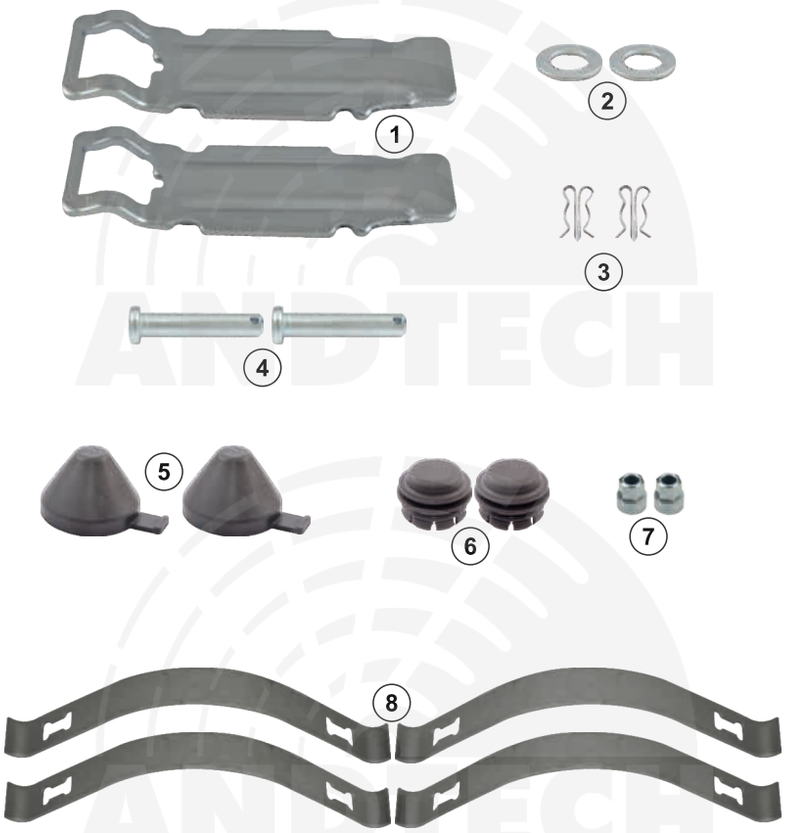

ANDTECH No :	0810 10347
Org. Ref. No :	WVA 29115 - 29116 - 29148
Application :	SB7..., SN7…
Description :	Caliper Pad Retainer Repair Kit
1- S17	Pad Retainer (20mm)
2- S18	Washer
3- S19	Cotter Pin
4- T9	Detent Pin
5- K12	Rubber Cap (Ø38mm)
6- K15	Rubber Tap
7- T20	Calibration Loaf
8- S164	Retention Spring

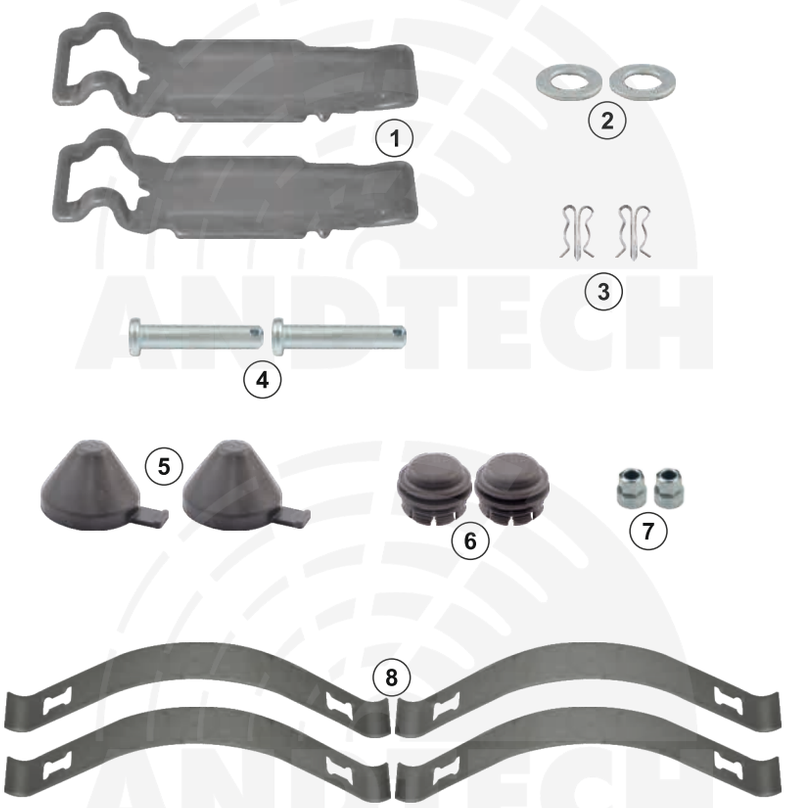

ANDTECH No :	0810 10356
Org. Ref. No :	WVA 29087
Application :	SB7..., SN7…, ADB22X
Description :	Caliper Pad Retainer Repair Kit
1- S92	Pad Retainer (25mm)
2- S18	Washer
3- S19	Cotter Pin
4- T9	Detent Pin
5- K12	Rubber Cap (Ø38mm)
6- K15	Rubber Tap
7- T20	Calibration Loaf
8- S164	Retention Spring

www.andacotomotiv.com

All original numbers, marks and models from vehicle manufacturers listed in this catalogue are for comparison purposes only, and may not be used in invoices.

KNORR

ANDTECH No :	0810 10399
Org. Ref. No :	WVA 29087 - 29163 - 29179 - 29105 - 29106 - 29108 - 20109
Application :	SB ..., SN ...
Description :	Caliper Pad Retainer Kit
1- S200	Retention Spring
2- K15	Rubber Tap
3- T9	Detent Pin
4- S18	Washer
5- S19	Cotter Pin

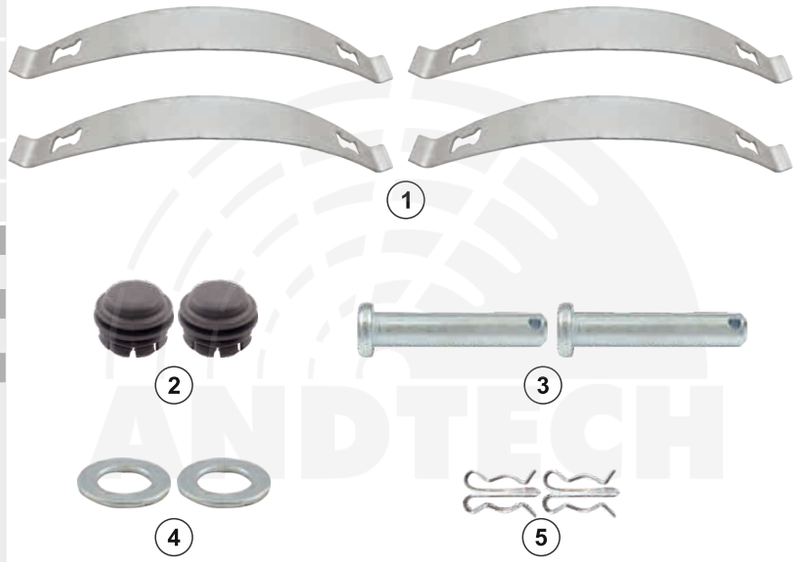

ANDTECH No :	0810 10400
Org. Ref. No :	WVA 29087 - 29163 - 29179 - 29105 - 29106 - 29108 - 20109
Application :	SB ..., SN ...
Description :	Caliper Pad Retainer Kit
1- S203	Retention Spring
2- K15	Rubber Tap
3- T9	Detent Pin
4- S18	Washer
5- S19	Cotter Pin

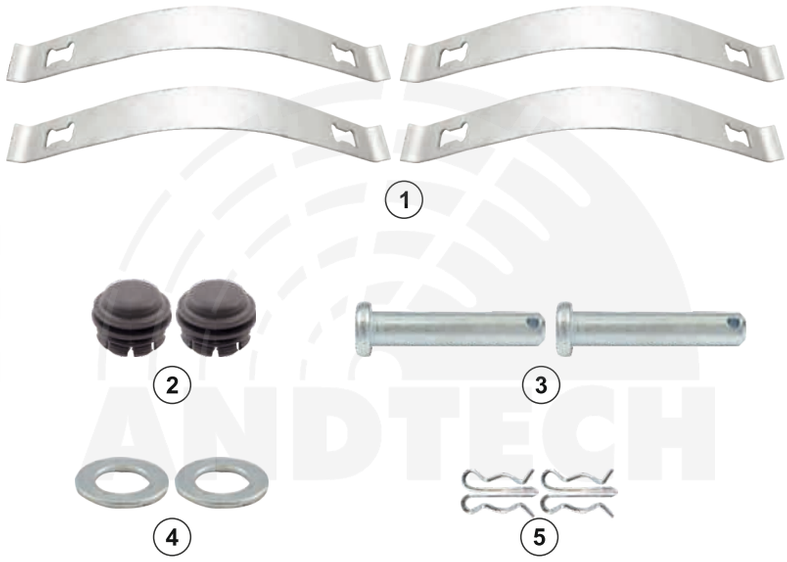

ANDTECH No :	0810 10403
Org. Ref. No :	WVA29244 - 29246 - A0064205320
Application :	SL7...
Description :	Pad Retainer Kit
1- S225	Retantion Spring
2- S18	Washer
3- S19	Cotter Pin
4- T9	Detent Pin
5- K12	Rubber Cap (Ø38mm)
6- K15	Rubber Tap
7- T20	Calibration Loaf

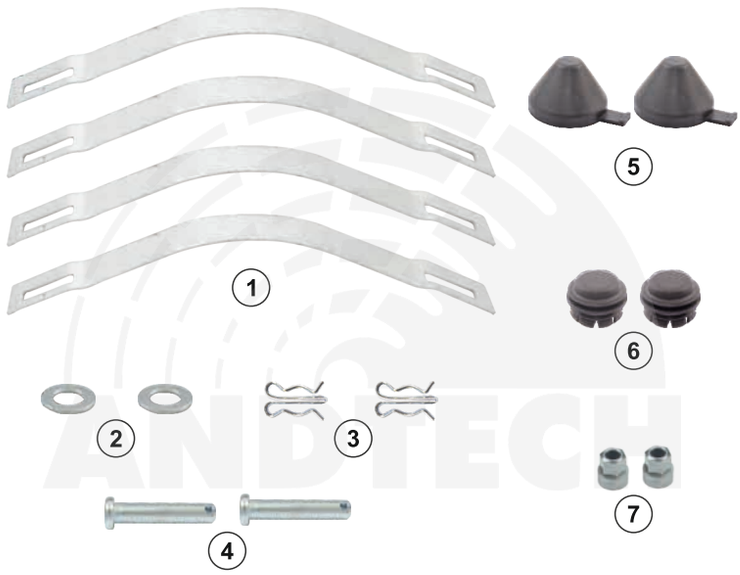

www.andacotomotiv.com

KNORR

ANDTECH No :	0810 10316
Org. Ref. No :	K047474
Application :	SB 7...
Description :	Caliper Repair Kit
1- T9	Detent Pin
2- S18	Washer
3- S19	Cotter Pin
4- K8	O-Ring
5- P1	Teflon Ring

ANDTECH No :	0810 10241
Org. Ref. No :	
Application :	ALL SB, SN, SK, SL, SM
Description :	Cap and Tap Repair Kit
1- K12	Rubber Cap (Ø38mm)
2- K13	Rubber Cap (Ø35mm)
3- K15	Rubber Tap
4- T20	Calibration Loaf

ANDTECH No :	0810 10183
Org. Ref. No :	
Application :	SB 6..., SB 7..., SN 7...
Description :	Caliper Repair Kit
1- K10	Boot
2- K11	Rubber Bush
3- K9	Boot
4- S21	Clamp
5- P1	Teflon Ring

ANDTECH No :	0810 10242
Org. Ref. No :	
Application :	SB..., SN...,
Description :	Caliper Repair Kit
1- K9	Boot
2- P1	Teflon Ring
3- K10	Boot
4- S21	Clamp

www.andacotomotiv.com

All original numbers, marks and models from vehicle manufacturers listed in this catalogue are for comparison purposes only, and may not be used in invoices.

KNORR

ANDTECH No :	0810 10243
Org. Ref. No :	
Application :	SB..., SN...,
Description :	Caliper Repair Kit
1- K9	Boot
2- P1	Teflon Ring
3- K10	Boot
4- S21	Clamp
5- K12	Rubber Cap (Ø38mm)

ANDTECH No :	0810 10184
Org. Ref. No :	
Application :	SB 6..., SB 7...
Description :	Caliper Repair Kit
1- K10	Boot
2- S2	Metal Cap
3- S21	Clamp
4- K8	O-Ring

ANDTECH No :	0810 10318
Org. Ref. No :	II350470063
Application :	SB...
Description :	Caliper Repair Kit
1- K10	Boot
2- S21	Clamp

ANDTECH No :	0810 10322
Org. Ref. No :	K561521
Application :	SB 7...
Description :	Caliper Repair Kit
1- K56	Boot
2- S21	Clamp

www.andacotomotiv.com

KNORR

ANDTECH No :	0810 10292
Org. Ref. No :	
Application :	SB7...
Description :	Caliper Repair Kit
1- K58	Rubber Tap
2- S21	Clamp

ANDTECH No :	0810 10185
Org. Ref. No :	II328090061
Application :	SB ...,
Description :	Caliper Repair Kit
1- S2	Metal Cap
2- K8	O-Ring
3- K9	Boot
4- P1	Teflon Ring

ANDTECH No :	0810 10244
Org. Ref. No :	1448600 - 1415149 - 1527631 - 1477675 - 0980106330 - 42541412 - Z004357
Application :	ALL SB, SN, SK, SL, SM
Description :	Caliper Repair Kit
1- K9	Boot
2- P1	Teflon Ring

ANDTECH No :	0810 10248
Org. Ref. No :	
Application :	SB ..., SN ...
Description :	Caliper Dust Cover
1- K77	Dust Cover

www.andacotomotiv.com

All original numbers, marks and models from vehicle manufacturers listed in this catalogue are for comparison purposes only, and may not be used in invoices.

KNORR

ANDTECH No :	0810 10249
Org. Ref. No :	
Application :	SB ..., SN ..., SK ..., ADB22X
Description :	Caliper Rubber Tap
1- K106	Rubber Tap

ANDTECH No :	0810 10250
Org. Ref. No :	
Application :	SN6..., SN7..., SK7..., ADB22X
Description :	Caliper Seal
1- K108	Seal (Ø42mm)

ANDTECH No :	0810 10251
Org. Ref. No :	
Application :	SN6..., SN7..., SK7...
Description :	Caliper Seal
1- K109	Seal (Ø45mm)

ANDTECH No :	0810 10240
Org. Ref. No :	
Application :	SB 6..., SB 7...
Description :	Caliper Metal Tap
1- S10	Metal Tap Ø40x11mm

www.andacotomotiv.com

KNORR

ANDTECH No :	0810 10317
Org. Ref. No :	
Application :	SK 7..., SN 7..., SN6...
Description :	Caliper Metal Tap
1- S97	Metal Tap Ø40x14mm

ANDTECH No :	0810 10380
Org. Ref. No :	
Application :	SL 7..., SM 7..., ST ...
Description :	Caliper Metal Tap
1- S16	Metal Tap Ø40x24mm

ANDTECH No :	0810 10373
Org. Ref. No :	
Application :	SL7..., SM7..., SN6..., SN7..., SK7..., SB6..., SB7...
Description :	Caliper Protective Cover
1- P75	Plastic Cover

ANDTECH No :	0810 10374
Org. Ref. No :	
Application :	SB5..., SB6..., SB7..., SN6..., SK7..., SL7..., SM7...
Description :	Caliper Protective Cover
1- P76	Plastic Cover

www.andacotomotiv.com

All original numbers, marks and models from vehicle manufacturers listed in this catalogue are for comparison purposes only, and may not be used in invoices.

KNORR

ANDTECH No :	0810 10254
Org. Ref. No :	K001502
Application :	SB 7..., SN 7... ZF Axle, MERCEDES - BMC Bus
Description :	Caliper Carrier Front
1- T246	Carrier 22.5"

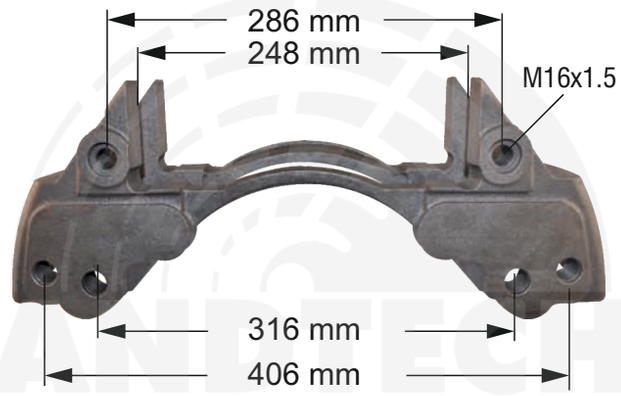

ANDTECH No :	0810 10255
Org. Ref. No :	K001529 - K001530 - 0004213706
Application :	SB 7..., SN 7... ZF Axle, MERCEDES - BMC Bus
Description :	Caliper Carrier (Rear-Right/Left)
1- T247	Carrier 22.5"

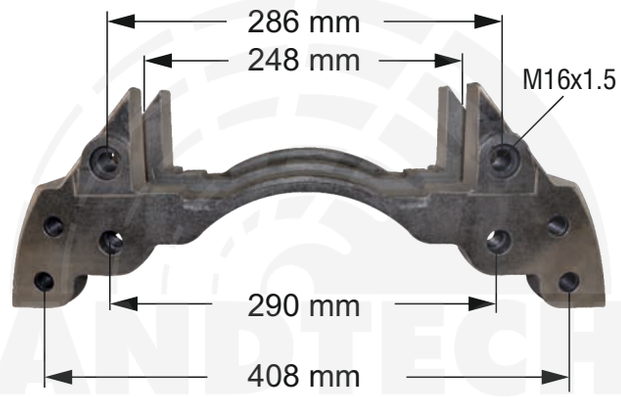

ANDTECH No :	0810 10327
Org. Ref. No :	K000027 - 0004230606 - 2121592
Application :	MERCEDES AXOR, SCANIA
Description :	Caliper Carrier
1- T308	Carrier 22.5"

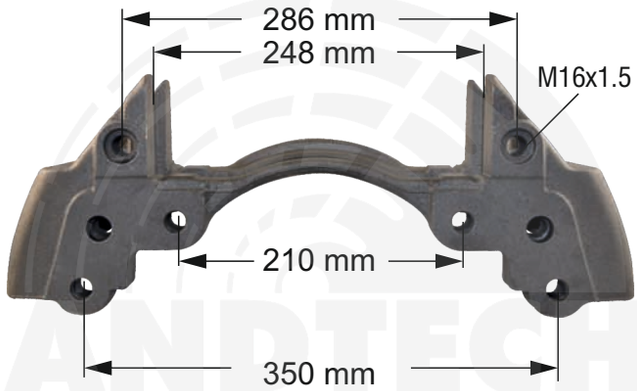

ANDTECH No :	0810 10328
Org. Ref. No :	K000026 - 0004211106
Application :	SB 7..., SN 7... MERCEDES ACTROS - AXOR
Description :	Caliper Carrier (Front)
1- T307	Carrier 22.5"

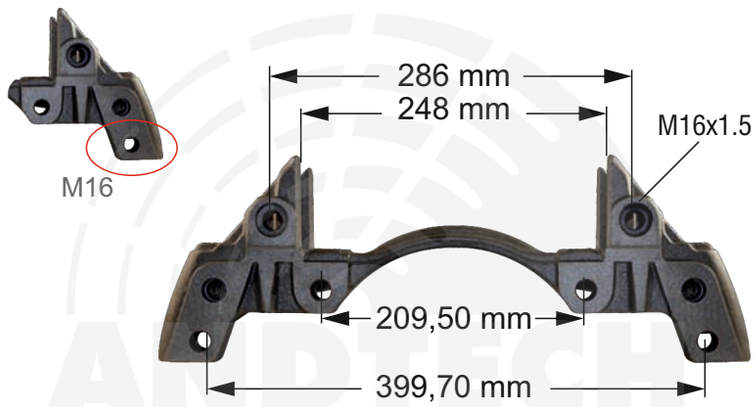

www.andacotomotiv.com

KNORR

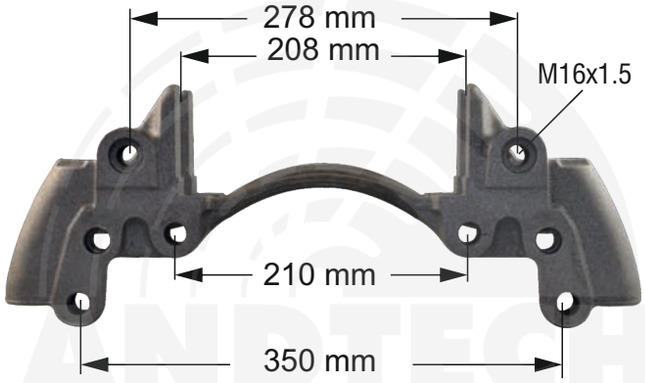

ANDTECH No :	0810 10329
Org. Ref. No :	K052379 - 0004231006
Application :	SL 7..., SM 7... MERCEDES ACTROS - AXOR
Description :	Caliper Carrier (Rear)
1- T306	Carrier 19.5"

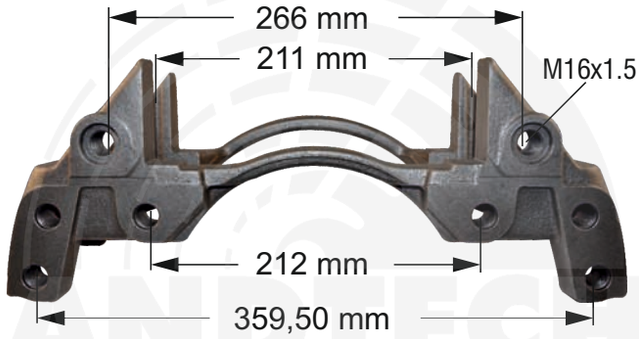

ANDTECH No :	0810 10330
Org. Ref. No :	K001105
Application :	SB 6..., SN 6..., MERCEDES ATEGO
Description :	Caliper Carrier
1- T305	Carrier 19.5"

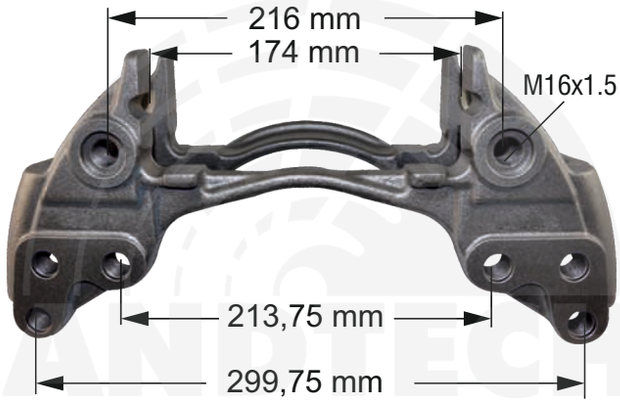

ANDTECH No :	0810 10331
Org. Ref. No :	K000358 - 0004211606
Application :	SN 5... MERCEDES ATEGO
Description :	Caliper Carrier
1- T302	Carrier 17.5"

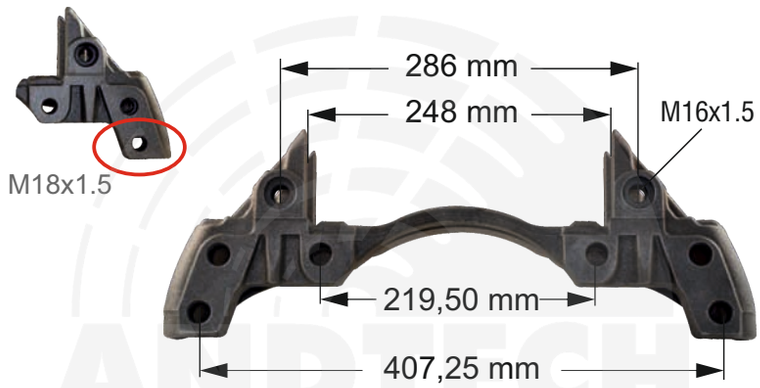

ANDTECH No :	0810 10332
Org. Ref. No :	K001278
Application :	SB 7..., SN 7..., ADB22X MAN TGA - ZF Axle (Front-Rear)
Description :	Caliper Carrier
1- T309	Carrier 22.5"

www.andacotomotiv.com

All original numbers, marks and models from vehicle manufacturers listed in this catalogue are for comparison purposes only, and may not be used in invoices.

KNORR

ANDTECH No :	0810 10333
Org. Ref. No :	K005606
Application :	SN 5... MAN 12.180
Description :	Caliper Carrier
1- T303	Carrier 17.5"

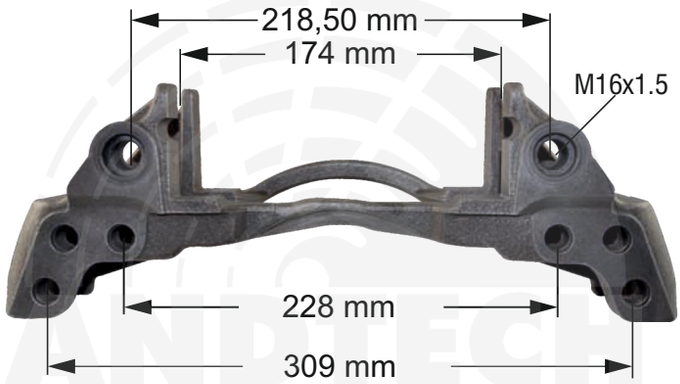

ANDTECH No :	0810 10334
Org. Ref. No :	K010765 - 1756388
Application :	SB 7..., SN 7..., ADB22X SCANIA
Description :	Caliper Carrier
1- T312	Carrier 22.5"

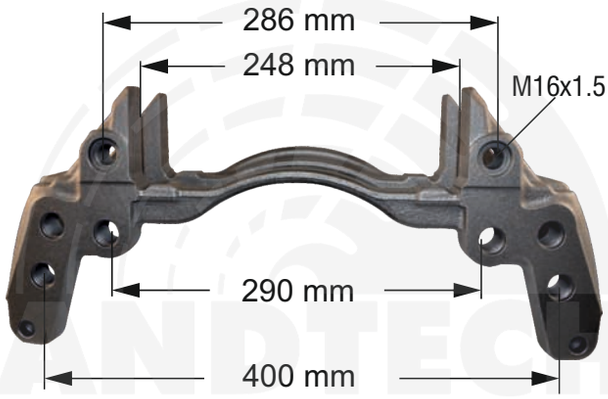

ANDTECH No :	0810 10335
Org. Ref. No :	K001510 - K108814
Application :	SB 7..., SN 7... IVECO
Description :	Caliper Carrier
1- T311	Carrier 22.5"

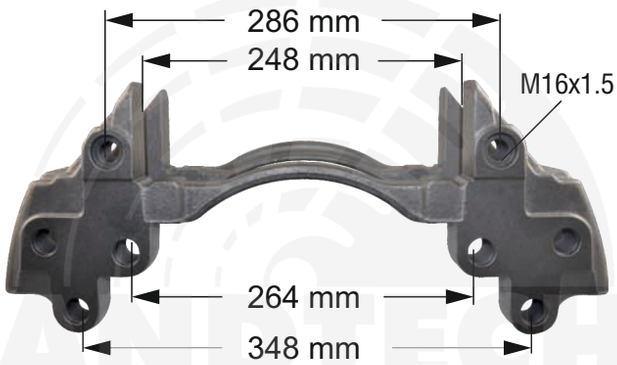

ANDTECH No :	0810 10336
Org. Ref. No :	K011479 - 1689314 - 1521259 - K001528
Application :	SB 7..., DAF
Description :	Caliper Carrier
1- T310	Carrier 22.5"

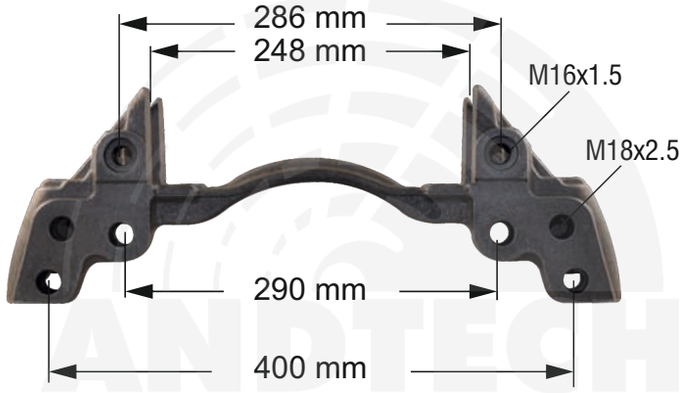

www.andacotomotiv.com

All original numbers, marks and models from vehicle manufacturers listed in this catalogue are for comparison purposes only, and may not be used in invoices.

KNORR

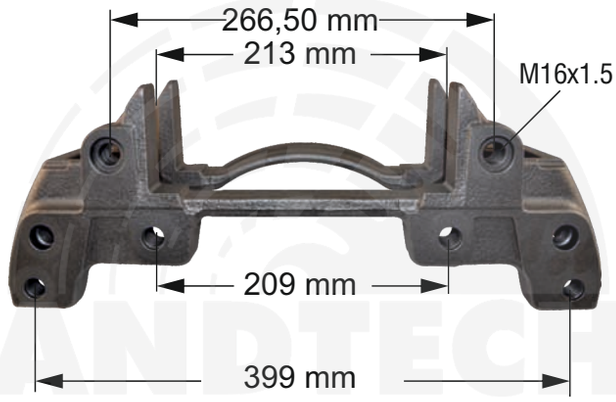

ANDTECH No :	0810 10337
Org. Ref. No :	K004099 - 212600
Application :	SAF, BPW, SK 7...
Description :	Caliper Carrier
1- T304	Carrier 22.5"

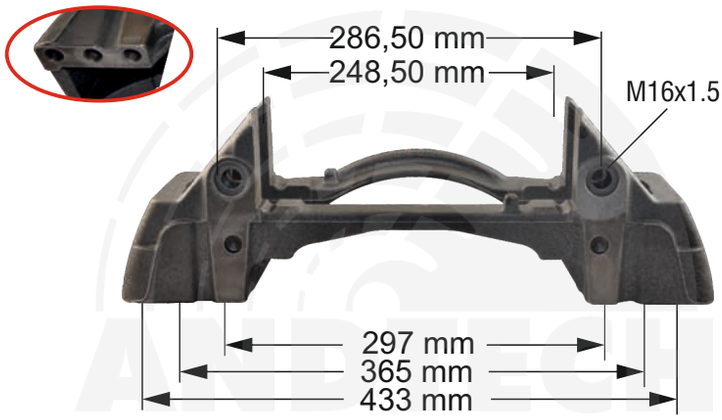

ANDTECH No :	0810 10338
Org. Ref. No :	K004680 - 01.303.88.57.0
Application :	BPW
Description :	Caliper Carrier
1- T313	Carrier 22.5"

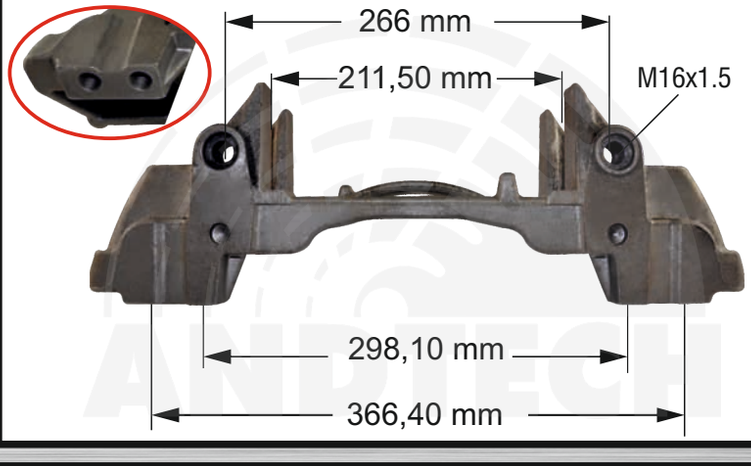

ANDTECH No :	0810 10339
Org. Ref. No :	01.303.88.56.0 - K012619
Application :	BPW
Description :	Caliper Carrier
1- T314	Carrier 19.5"

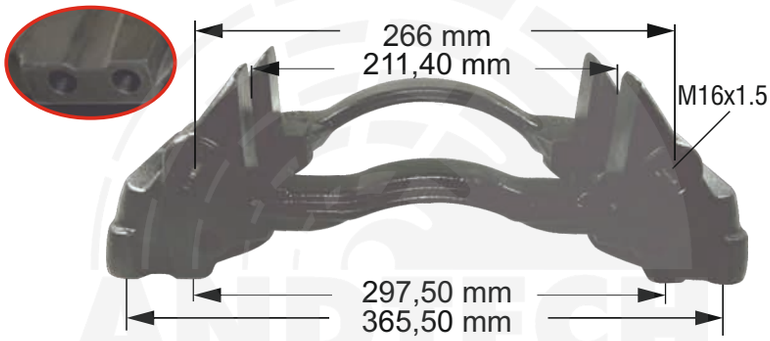

ANDTECH No :	0810 10245
Org. Ref. No :	K004679 - 01.303.88.55.0 - 2379695
Application :	BPW
Description :	Caliper Carrier
1- T489	Carrier 19.5"

www.andacotomotiv.com

All original numbers, marks and models from vehicle manufacturers listed in this catalogue are for comparison purposes only, and may not be used in invoices.

KNORR

ANDTECH No :	0810 10382
Org. Ref. No :	K015308
Application :	SK 7...
Description :	Caliper Carrier
1- T492	Carrier 22.5"

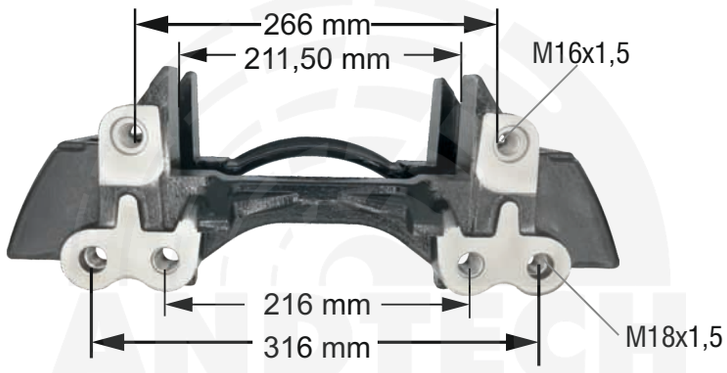

ANDTECH No :	0810 10340
Org. Ref. No :	K001926 - 0004213106 - K000690 - JAE0110402006
Application :	BPW
Description :	Caliper Carrier
1- T315	Carrier 19.5"

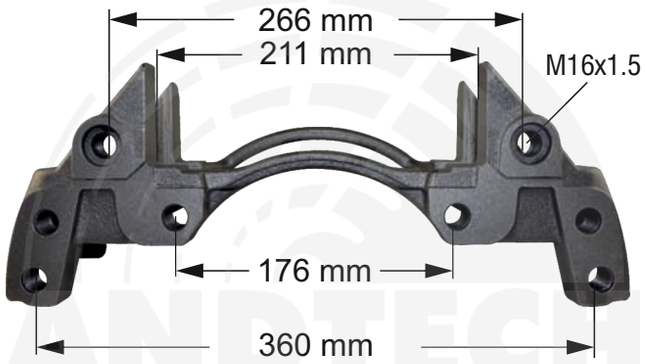

ANDTECH No :	0810 10341
Org. Ref. No :	K001497
Application :	BPW
Description :	Caliper Carrier
1- T316	Carrier 19.5"

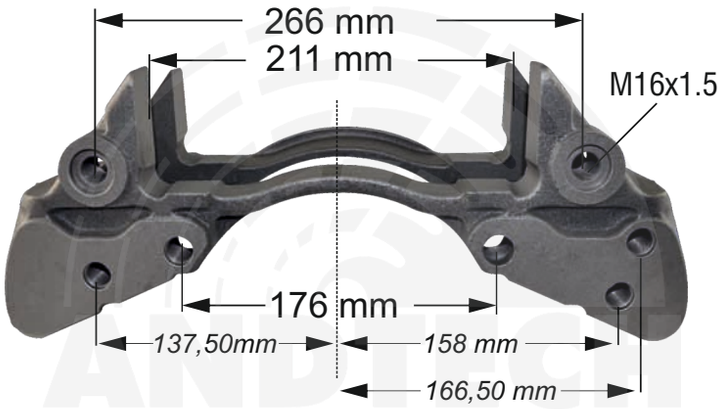

www.andacotomotiv.com

All original numbers, marks and models from vehicle manufacturers listed in this catalogue are for comparison purposes only, and may not be used in invoices.

KNORR

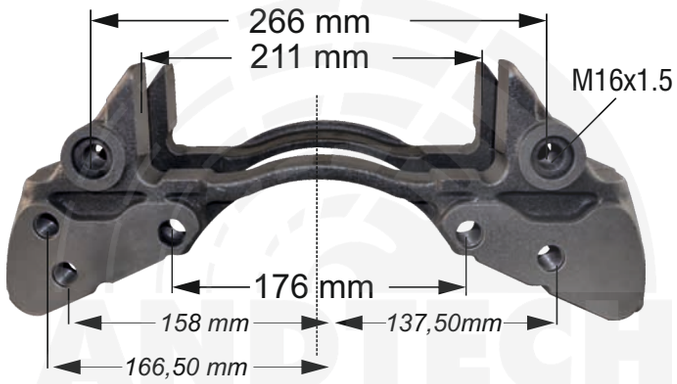

ANDTECH No :	0810 10342
Org. Ref. No :	K004206
Application :	BPW
Description :	Caliper Carrier
1- T317	Carrier 19.5"

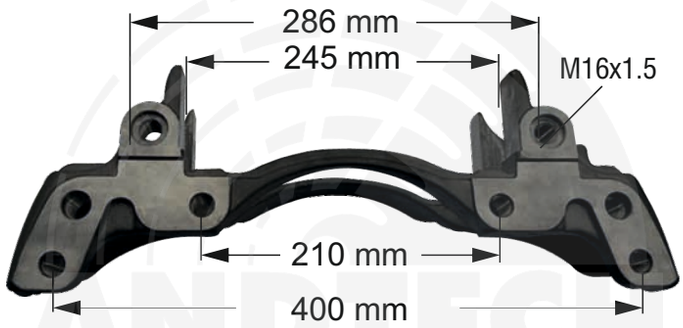

ANDTECH No :	0810 10357
Org. Ref. No :	K046498 - 0004215706
Application :	SM 7...
Description :	Caliper Carrier
1- T395	Carrier 22.5"

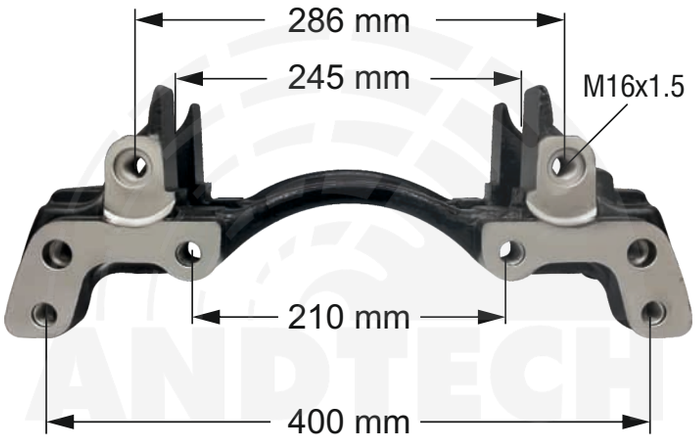

ANDTECH No :	0810 10398
Org. Ref. No :	K046764K50 - 000 421 5806 - 0004215806
Application :	MERCEDES 4140 – SM7…, SL7…
Description :	Caliper Carrier
1- T639	Carrier 22.5"

www.andacotomotiv.com

All original numbers, marks and models from vehicle manufacturers listed in this catalogue are for comparison purposes only, and may not be used in invoices.

MONTAJ
ANDAC

ANDAC

Servo 65
TSUGAMI
MORSYE-II
074
069
LNA
TURBO HP
INDAC

MERITOR

ANDTECH No :	0810 20306
Org. Ref. No :	
Application :	DX195
Description :	Caliper Complete Overhaul Repair Kit (Left)

www.andacotomotiv.com

MERITOR

ANDTECH No :	0810 20307
Org. Ref. No :	
Application :	DX195
Description :	Caliper Complete Overhaul Repair Kit (Right)

www.andacotomotiv.com

All original numbers, marks and models from vehicle manufacturers listed in this catalogue are for comparison purposes only, and may not be used in invoices.

MERITOR

ANDTECH No :	0810 20123
Org. Ref. No :	MCK1171
Application :	DX 195
Description :	Caliper Repair Kit
1- K87	Boot
2- K88	Dust Cover
3- K89	Boot
4- S14	Metal Tap (41x30mm)
5- T77	Guide Pin Ø32x97mm
6- T173	Guide Pin Ø32x97mm
7- C3	Screw M16x1,5x80mm
8- C34	Screw M16x1,5x55mm
9- B10	Bush
10- K90	Dust Cover
11- C35	Screw M10x20mm
12- C36	Screw M12x30mm
13- C37	Screw M12x30mm FT
14- C38	Screw M8x20mm
15- CN3	Gasket
16- T153	Detent Pin
17- S63	Cotter Pin
18- C39	Screw
19- S62	Washer
20- T146	Detent Pin
21- S33	Cotter Pin
22- S64	Metal Shim

ANDTECH No :	0810 20124
Org. Ref. No :	MCK1261
Application :	DX 225-21
Description :	Caliper Repair Kit
1- K87	Boot
2- K88	Dust Cover
3- K114	Boot
4- S14	Metal Tap (41x30mm)
5- T137	Guide Pin Ø32x93,5mm
6- T138	Guide Pin Ø32x93,5mm
7- C3	Screw M16x1,5x80mm
8- C34	Screw M16x1,5x55mm
9- B10	Bush
10- K90	Dust Cover
11- C35	Screw M10x20mm
12- C36	Screw M12x30mm
13- C37	Screw M12x30mm FT
14- C38	Screw M8x20mm
15- CN3	Gasket
16- T153	Detent Pin
17- S63	Cotter Pin
18- C39	Screw
19- S62	Washer
20- T146	Detent Pin
21- S33	Cotter Pin
22- S64	Metal Shim

www.andacotomotiv.com

MERITOR

ANDTECH No :	0810 20107
Org. Ref. No :	MCK1172
Application :	DX 225
Description :	Caliper Repair Kit
1- K116	Boot
2- K115	Dust Cover
3- K114	Boot
4- S193	Metal Tap (42x31mm)
5- T597	Guide Pin Ø35x98mm
6- T598	Guide Pin Ø35x98mm
7- C31	Screw M18x2,5x90mm
8- C30	Screw M18x2,5x55mm
9- B13	Bush (35x98mm)
10- K90	Dust Cover
11- C29	Screw M12x1,75x25mm
12- C36	Screw M12x30mm
13- C37	Screw M12x30mm FT
14- C38	Screw M8x20mm
15- CN3	Gasket
16- T153	Detent Pin
17- S63	Cotter Pin
18- C39	Screw
19- S62	Washer
20- T146	Detent Pin
21- S33	Cotter Pin
22- S64	Metal Shim

ANDTECH No :	0810 20102
Org. Ref. No :	
Application :	DX 195
Description :	Caliper Repair Kit
1- K87	Boot
2- K88	Dust Cover
3- K89	Boot
4- S14	Metal Tap (41x30mm)
5- T77	Guide Pin Ø32x97mm
6- T173	Guide Pin Ø32x97mm
7- C3	Screw M16x1,5x80mm
8- C34	Screw M16x1,5x55mm
9- B10	Bush
10- K90	Dust Cover
11- C35	Screw M10x20mm
12- C36	Screw M12x30mm
13- C37	Screw M12x30mm FT
14- C38	Screw M8x20mm
15- S62	Washer
16- C39	Screw
17- CN3	Gasket

www.andacotomotiv.com

All original numbers, marks and models from vehicle manufacturers listed in this catalogue are for comparison purposes only, and may not be used in invoices.

MERITOR

ANDTECH No :	0810 20351
Org. Ref. No :	
Application :	DX 195
Description :	Caliper Repair Kit
1- K87	Boot
2- K88	Dust Cover
3- K89	Boot
4- S14	Metal Tap (41x30mm)
5- T77	Guide Pin Ø32x97mm
6- T173	Guide Pin Ø32x97mm
7- C3	Screw M16x1,5x80mm
8- C34	Screw M16x1,5x55mm
9- B10	Bush
10- S90	Pin
11- T146	Detent Pin
12- S33	Cotter Pin
13- C39	Screw
14- S62	Washer
15- C35	Screw M10x20mm

ANDTECH No :	0810 20367
Org. Ref. No :	
Application :	DX 225-21
Description :	Caliper Repair Kit
1- K87	Boot
2- K88	Dust Cover
3- K114	Boot
4- S14	Metal Tap (41x30mm)
5- T137	Guide Pin Ø32x93.5mm
6- T138	Guide Pin Ø32x93.5mm
7- C3	Screw M16x1,5x80mm
8- C34	Screw M16x1,5x55mm
9- B10	Bush
10- S90	Pin
11- T146	Detent Pin
12- S33	Cotter Pin
13- C39	Screw
14- S62	Washer
15- C35	Screw M10x20mm

www.andacotomotiv.com

MERITOR

ANDTECH No :	0810 20473
Org. Ref. No :	
Application :	DX 225
Description :	Caliper Repair Kit
1- T597	Guide Pin Ø35x98mm
2- C31	Screw M18x2,5x90mm
3- T598	Guide Pin Ø35x98mm
4- C30	Screw M18x2,5x55mm
5- B13	Bush (35x39mm)
6- S193	Metal Tap (42x31mm)

ANDTECH No :	0810 20354
Org. Ref. No :	DSB7
Application :	DX 195
Description :	Caliper Repair Kit
1- K89	Boot
2- S14	Metal Tap (41x30mm)
3- T77	Guide Pin Ø32x97mm
4- C3	Screw M16x1,5x80mm
5- T173	Guide Pin Ø32x97mm
6- C34	Screw M16x1,5x55mm
7- B10	Bush
8- C39	Screw
9- S62	Washer
10- T146	Detent Pin
11- S33	Cotter Pin

ANDTECH No :	0810 20355
Org. Ref. No :	
Application :	DX 225-21
Description :	Caliper Repair Kit
1- K114	Boot
2- S14	Metal Tap (41x30mm)
3- T137	Guide Pin Ø32X93.5mm
4- C3	Screw M16x1,5x80mm
5- T138	Guide Pin Ø32X93.5mm
6- C34	Screw M16x1,5x55mm
7- B10	Bush
8- C39	Screw
9- S62	Washer
10- T146	Detent Pin
11- S33	Cotter Pin

www.andacotomotiv.com

All original numbers, marks and models from vehicle manufacturers listed in this catalogue are for comparison purposes only, and may not be used in invoices.

MERITOR

ANDTECH No :	0810 20299
Org. Ref. No :	
Application :	DX195
Description :	Caliper Repair Kit
1- T77	Guide Pin Ø32x97mm
2- C3	Screw M16x1.5x80mm
3- T173	Guide Pin Ø32x97mm
4- C34	Screw M16x1,5x55mm
5- B10	Bush
6- S14	Metal Tap (41x30mm)

ANDTECH No :	0810 20300
Org. Ref. No :	
Application :	DX 225-21
Description :	Caliper Repair Kit
1- T137	Guide Pin Ø32X93.5mm
2- C3	Screw M16x1.5x80mm
3- T138	Guide Pin Ø32x93.5mm
4- C34	Screw M16x1,5x55mm
5- B10	Bush
6- S14	Metal Tap (41x30mm)

ANDTECH No :	0810 20105
Org. Ref. No :	
Application :	DX 195
Description :	Caliper Repair Kit
1- K87	Boot
2- K88	Dust Cover
3- K89	Boot
4- S14	Metal Tap (41x30mm)
5- C36	Screw M12x30mm
6- C37	Screw M12x30mm FT
7- C35	Screw M10x20mm
8- C38	Screw M8x20mm

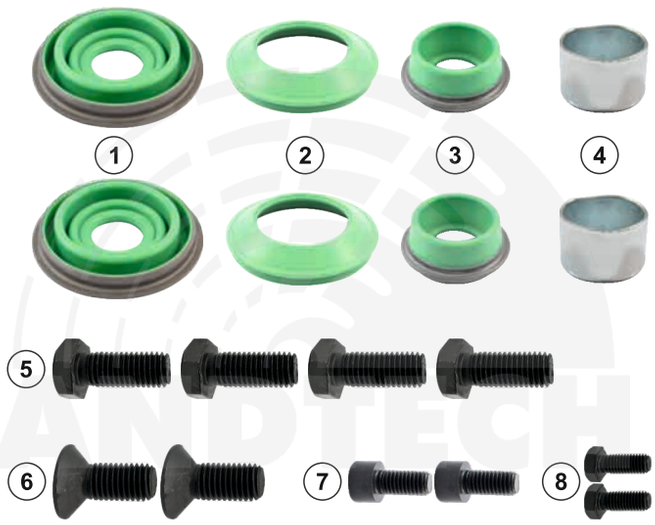

www.andacotomotiv.com

MERITOR

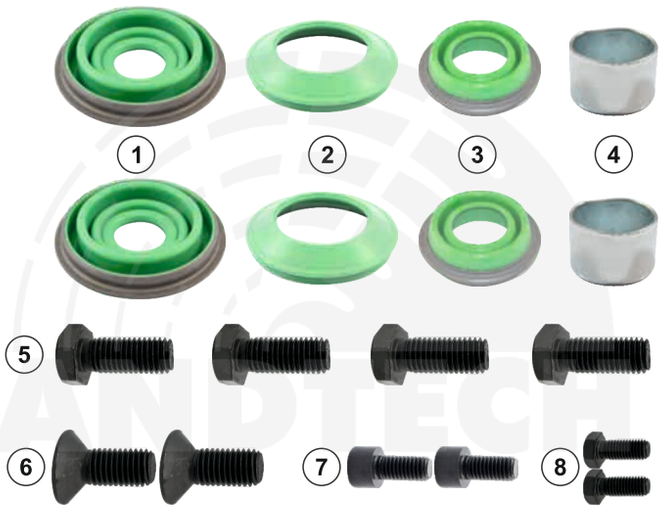

ANDTECH No :	0810 20350
Org. Ref. No :	
Application :	DX 225-21
Description :	Caliper Repair Kit
1- K87	Boot
2- K88	Dust Cover
3- K114	Boot
4- S14	Metal Tap (41x30mm)
5- C36	Screw M12x30mm
6- C37	Screw M12x30mm FT
7- C35	Screw M10x20mm
8- C38	Screw M8x20mm

ANDTECH No :	0810 20353
Org. Ref. No :	DSB104
Application :	DX 195
Description :	Caliper Repair Kit
1- K87	Boot
2- K88	Dust Cover
3- K89	Boot
4- S14	Metal Tap (41x30mm)
5- K90	Dust Cover
6- C35	Screw M10x20mm
7- C36	Screw M12x30mm
8- C37	Screw M12x30mm FT
9- C38	Screw M8x20mm
10- CN3	Gasket
11- C39	Screw
12- S62	Washer
13- K52	Seal

ANDTECH No :	0810 20101
Org. Ref. No :	MCK1192
Application :	DX 195
Description :	Caliper Repair Kit
1- K87	Boot
2- K88	Dust Cover
3- K89	Boot
4- S14	Metal Tap (41x30mm)
5- C3	Screw M16x1,5x80mm
6- C34	Screw M16x1,5x55mm

www.andacotomotiv.com

All original numbers, marks and models from vehicle manufacturers listed in this catalogue are for comparison purposes only, and may not be used in invoices.

MERITOR

ANDTECH No :	0810 20348
Org. Ref. No :	MCK1193
Application :	DX 225
Description :	Caliper Repair Kit
1- K116	Boot
2- K115	Dust Cover
3- K114	Boot
4- S193	Metal Tap (42x31mm)
5- C31	Screw M18x2,5x90mm
6- C30	Screw M18x2,5x55mm

ANDTECH No :	0810 20103
Org. Ref. No :	
Application :	DX 195
Description :	Caliper Repair Kit
K87	Boot
K88	Dust Cover
K89	Boot

ANDTECH No :	0810 20349
Org. Ref. No :	
Application :	DX 225
Description :	Caliper Repair Kit
1- K116	Boot
2- K115	Dust Cover
3- K114	Boot

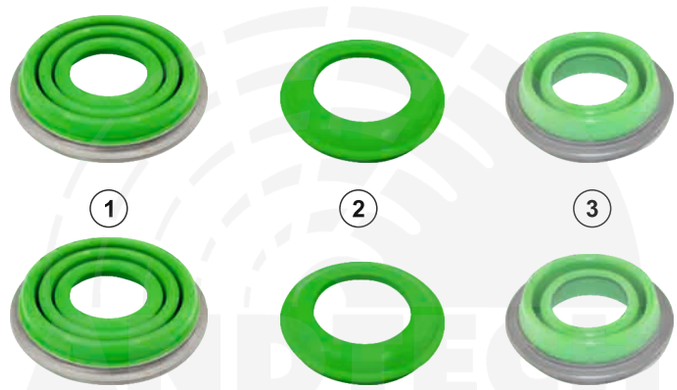

www.andacotomotiv.com

MERITOR

ANDTECH No :	0810 20121
Org. Ref. No :	MCK1293 - DSB6R
Application :	DX 195
Description :	Caliper Repair Kit (Right)
1- T177	Bridge
2- T183	Push Plate
3- T129	Bush
4- T178	Guide Pin
5- T180	Gear
6- T184	Screw
7- C35	Screw M10x20mm
8- S50	Wavy Washer
9- SK3	Snap Ring
10- S90	Pin
11- S39	Metal Tap (37x15mm)
12- K87	Boot
13- K88	Dust Cover

ANDTECH No :	0810 20122
Org. Ref. No :	MCK1292 - DSB6L
Application :	DX 195
Description :	Caliper Repair Kit (Left)
1- T177	Bridge
2- T183	Push Plate
3- T129	Bush
4- T182	Guide Pin
5- T180	Gear
6- T185	Screw
7- C35	Screw M10x20mm
8- S50	Wavy Washer
9- SK3	Snap Ring
10- S90	Pin
11- S39	Metal Tap (37x15mm)
12- K87	Boot
13- K88	Dust Cover

www.andacotomotiv.com

All original numbers, marks and models from vehicle manufacturers listed in this catalogue are for comparison purposes only, and may not be used in invoices.

MERITOR

ANDTECH No :	0810 20372
Org. Ref. No :	
Application :	DX 225-21
Description :	Caliper Repair Kit (Right)
1- T177	Bridge
2- T241	Push Plate
3- T129	Bush
4- T178	Guide Pin
5- T180	Gear
6- T184	Screw
7- C35	Screw M10x20mm
8- S50	Wavy Washer
9- SK3	Snap Ring
10- S90	Pin
11- S39	Metal Tap (37x15mm)
12- K87	Boot
13- K88	Dust Cover

ANDTECH No :	0810 20373
Org. Ref. No :	
Application :	DX 225-21
Description :	Caliper Repair Kit (Left)
1- T177	Bridge
2- T241	Push Plate
3- T129	Bush
4- T182	Guide Pin
5- T180	Gear
6- T185	Screw
7- C35	Screw M10x20mm
8- S50	Wavy Washer
9- SK3	Snap Ring
10- S90	Pin
11- S39	Metal Tap (37x15mm)
12- K87	Boot
13- K88	Dust Cover

www.andacotomotiv.com

All original numbers, marks and models from vehicle manufacturers listed in this catalogue are for comparison purposes only, and may not be used in invoices.

MERITOR

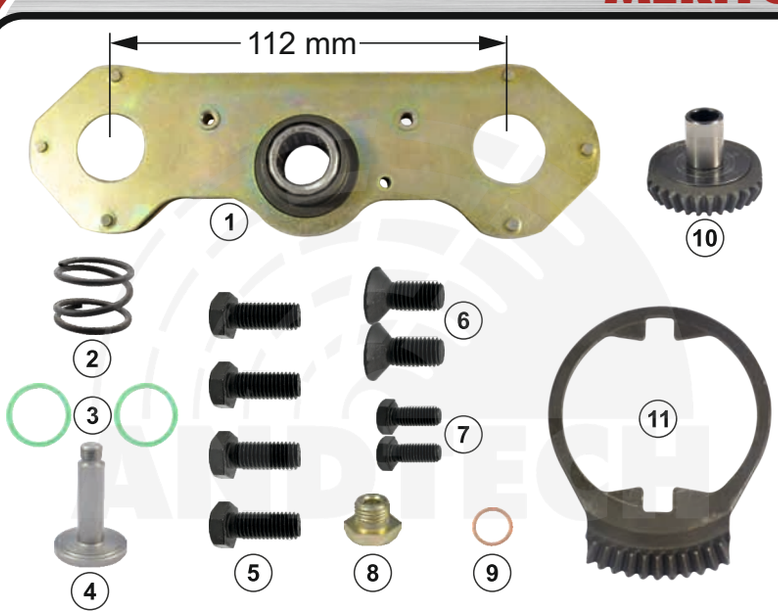

ANDTECH No :	0810 20119
Org. Ref. No :	MCK1291 - DSL5R
Application :	DX 195 - DX 225-21
Description :	Caliper Mechanism Repair Kit (Right)
1- T186	Mechanism
2- Y20	Spring
3- K92	Seal
4- T187	Pin
5- C36	Screw M12x30mm
6- C37	Screw M12x30mm FT
7- C38	Screw M8x20mm
8- C39	Screw
9- S62	Washer
10- T181	Gear
11- T179	Center Gear

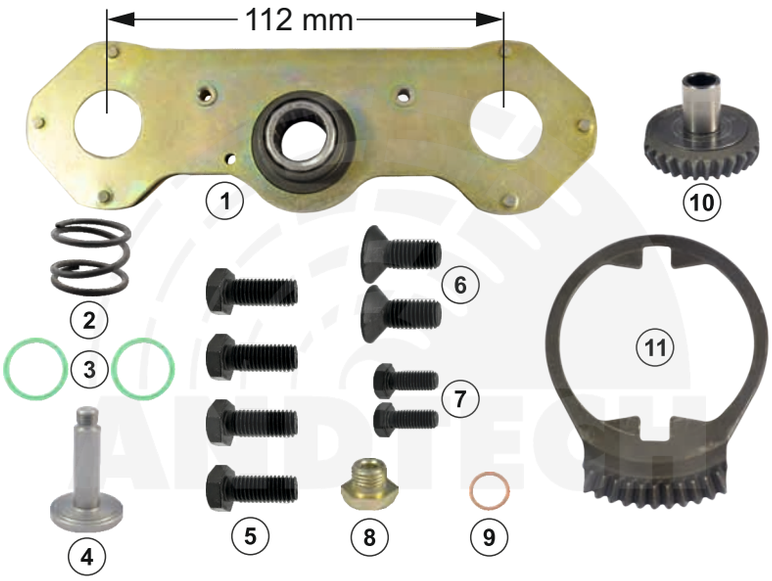

ANDTECH No :	0810 20120
Org. Ref. No :	MCK1290 - DSL5L
Application :	DX 195 - DX 225-21
Description :	Caliper Mechanism Repair Kit (Left)
1- T192	Mechanism
2- Y20	Spring
3- K92	Seal
4- T187	Pin
5- C36	Screw M12x30mm
6- C37	Screw M12x30mm FT
7- C38	Screw M8x20mm
8- C39	Screw
9- S62	Washer
10- T181	Gear
11- T179	Center Gear

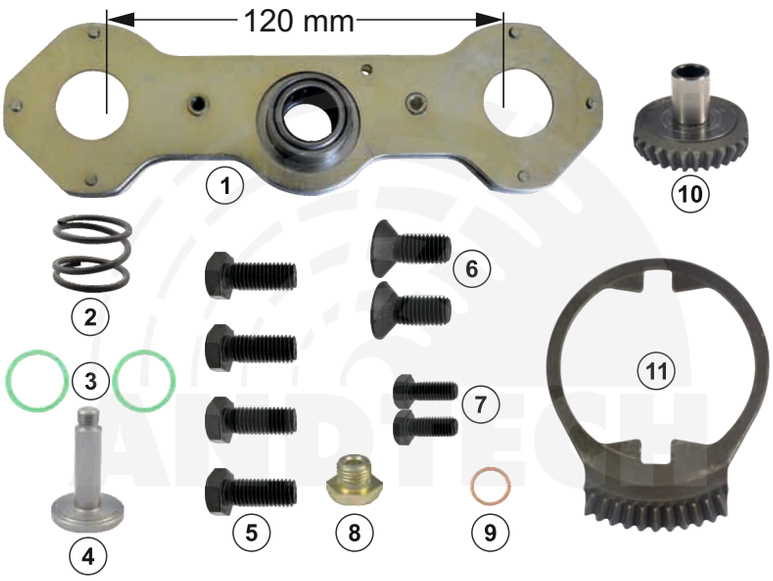

ANDTECH No :	0810 20408
Org. Ref. No :	
Application :	DX 225
Description :	Caliper Mechanism Repair Kit (Right)
1- T382	Mechanism
2- Y20	Spring
3- K92	Seal
4- T187	Pin
5- C36	Screw M12x30mm
6- C37	Screw M12x30mm FT
7- C38	Screw M8x20mm
8- C39	Screw
9- S62	Washer
10- T181	Gear
11- T179	Center Gear

www.andacotomotiv.com

All original numbers, marks and models from vehicle manufacturers listed in this catalogue are for comparison purposes only, and may not be used in invoices.

MERITOR

ANDTECH No :	0810 20409
Org. Ref. No :	
Application :	DX 225
Description :	Caliper Mechanism Repair Kit (Left)
1- T383	Mechanism
2- Y20	Spring
3- K92	Seal
4- T187	Pin
5- C36	Screw M12x30mm
6- C37	Screw M12x30mm FT
7- C38	Screw M8x20mm
8- C39	Screw
9- S62	Washer
10- T179	Center Gear
11- 181	Gear

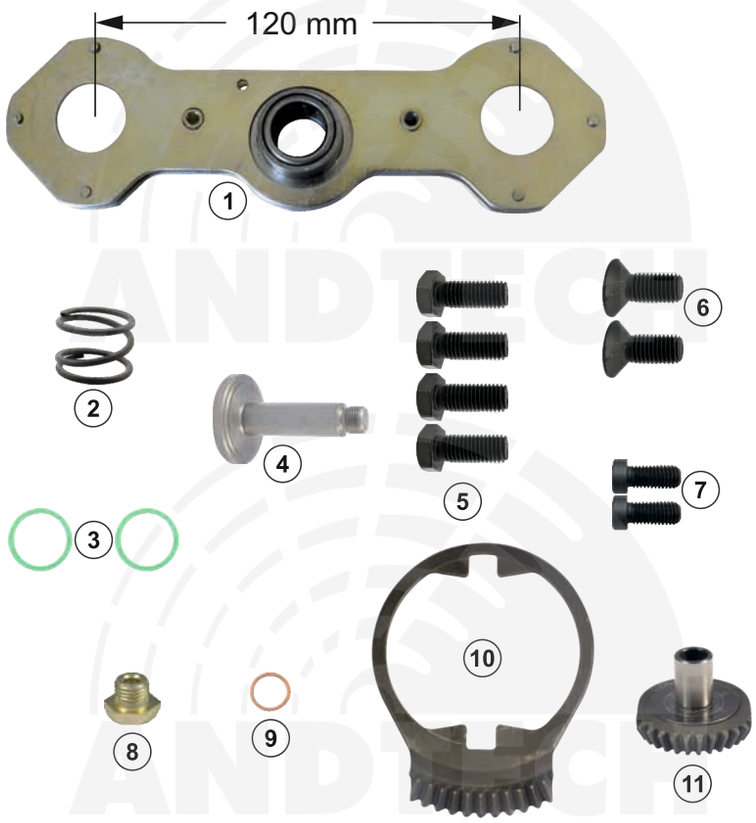

ANDTECH No :	0810 20471
Org. Ref. No :	MCK1336
Application :	DX 225
Description :	Caliper Mechanism Repair Kit (Left)
1- T383	Mechanism
2- Y20	Spring
3- K92	Seal
4- T187	Pin
5- C36	Screw M12x30mm
6- C37	Screw M12x30mm FT
7- C29	Screw M12x1,75x1,25mm
8- C39	Screw
9- S62	Washer
10- T179	Center Gear
11- T181	Gear
12- CN7	Gasket

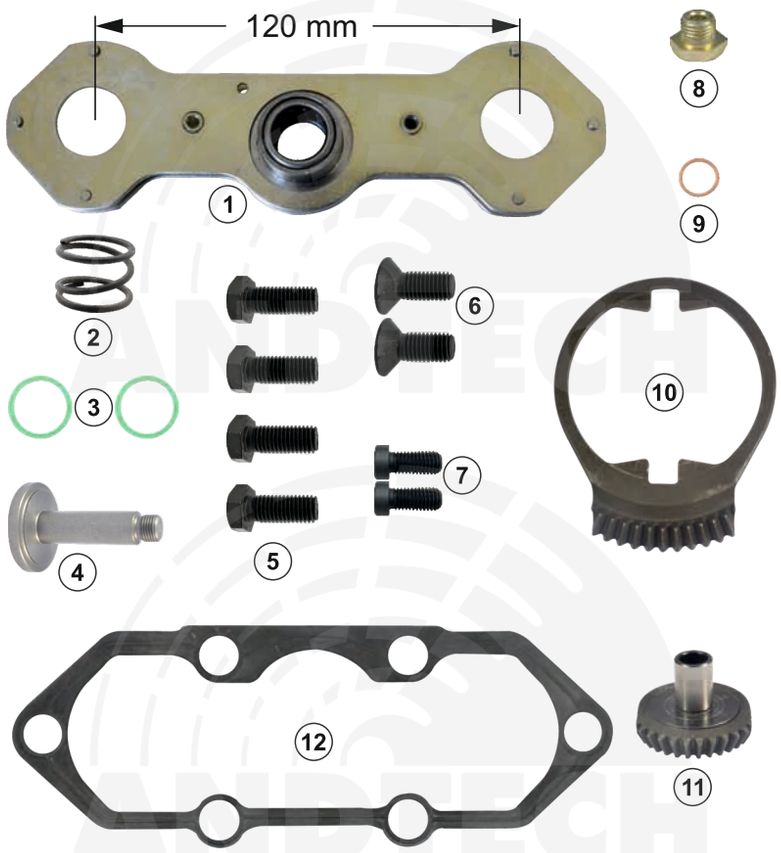

www.andacotomotiv.com

All original numbers, marks and models from vehicle manufacturers listed in this catalogue are for comparison purposes only, and may not be used in invoices.

MERITOR

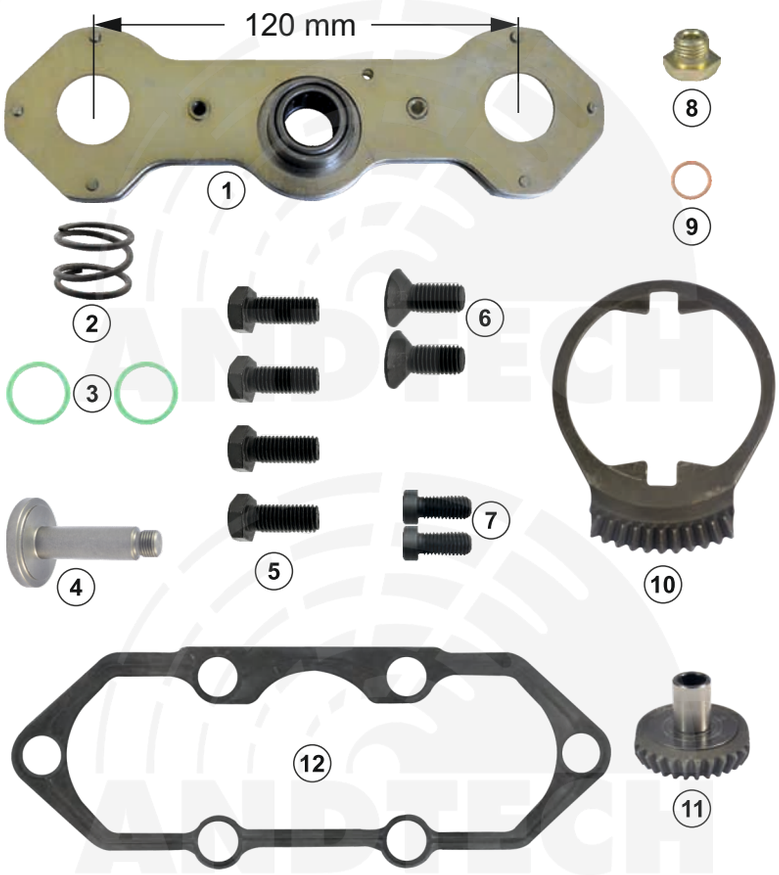

ANDTECH No :	0810 20472
Org. Ref. No :	MCK1337
Application :	DX 225
Description :	Caliper Mechanism Repair Kit (Right)
1- T382	Mechanism
2- Y20	Spring
3- K92	Seal
4- T187	Pin
5- C36	Screw M12x30mm
6- C37	Screw M12x30mm FT
7- C29	Screw M12x1,75x1,25mm
8- C39	Screw
9- S62	Washer
10- T179	Center Gear
11- T181	Gear
12- CN7	Gasket

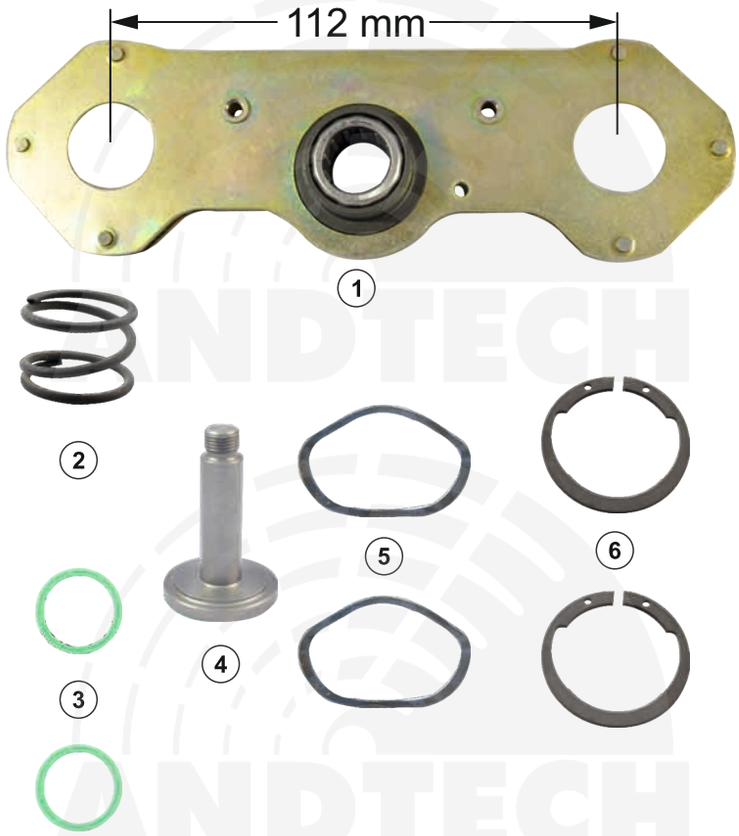

ANDTECH No :	0810 20117
Org. Ref. No :	
Application :	DX 195 - DX 225-21
Description :	Caliper Mechanism Repair Kit (Right)
1- T186	Mechanism
2- Y20	Spring
3- K92	Seal
4- T187	Pin
5- S50	Wavy Washer
6- SK3	Snap Ring

www.andacotomotiv.com

All original numbers, marks and models from vehicle manufacturers listed in this catalogue are for comparison purposes only, and may not be used in invoices.

MERITOR

ANDTECH No :	0810 20118
Org. Ref. No :	
Application :	DX 195 - DX 225-21
Description :	Caliper Mechanism Repair Kit (Left)
1- T192	Mechanism
2- Y20	Spring
3- K92	Seal
4- T187	Pin
5- S50	Wavy Washer
6- SK3	Snap Ring

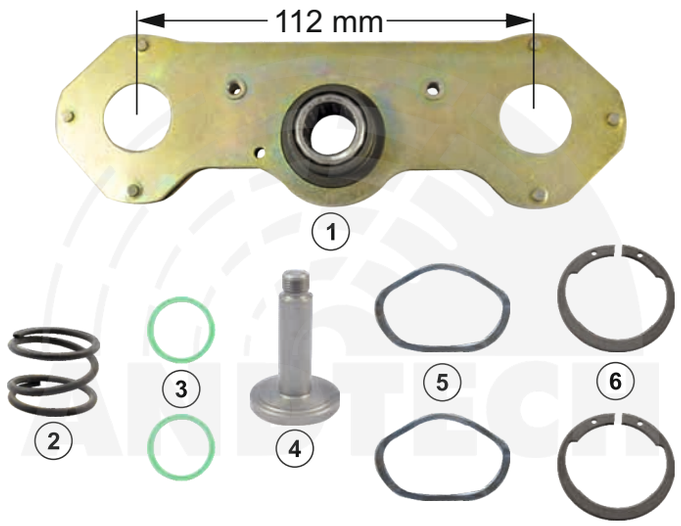

ANDTECH No :	0810 20406
Org. Ref. No :	
Application :	DX 225
Description :	Caliper Mechanism Repair Kit (Right)
1- T382	Mechanism
2- Y20	Spring
3- K92	Seal
4- T187	Pin
5- S50	Wavy Washer
6- SK3	Snap Ring

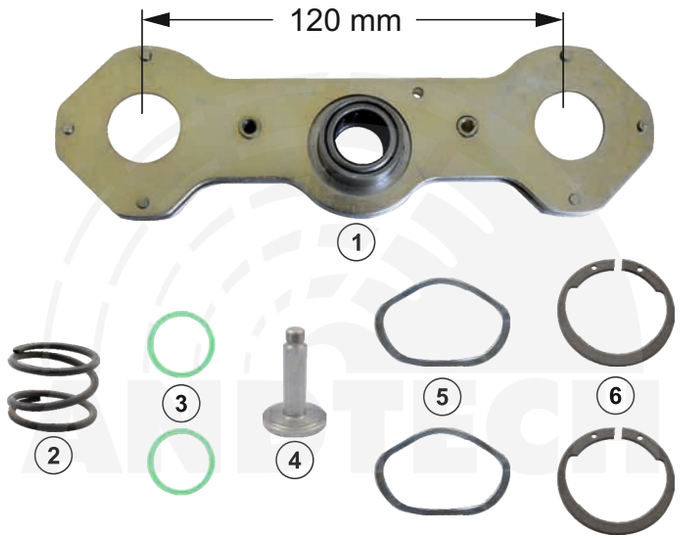

ANDTECH No :	0810 20407
Org. Ref. No :	
Application :	DX 225
Description :	Caliper Mechanism Repair Kit (Left)
1- T383	Mechanism
2- Y20	Spring
3- K92	Seal
4- T187	Pin
5- S50	Wavy Washer
6- SK3	Snap Ring

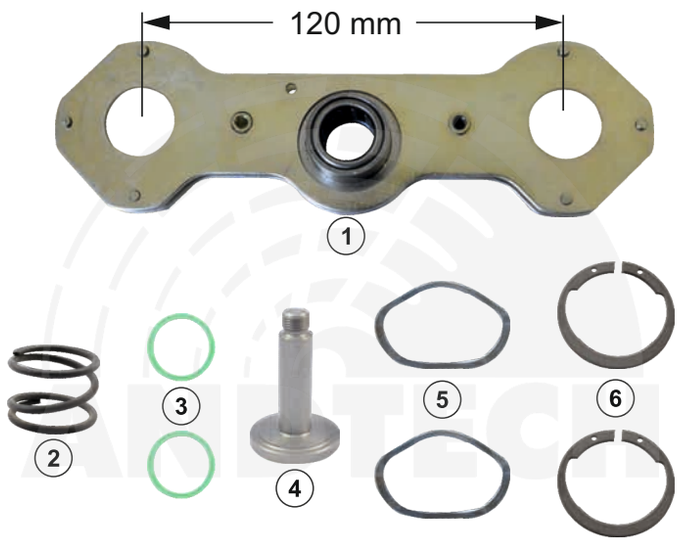

www.andacotomotiv.com

MERITOR

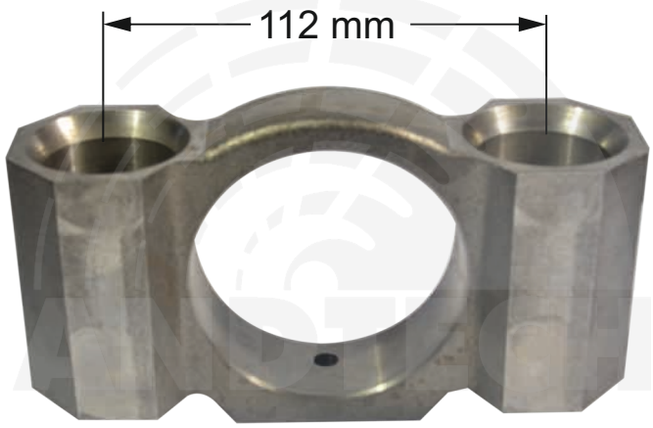

1

2

ANDTECH No :	0810 20109
Org. Ref. No :	
Application :	DX 195, DX 225 - 21
Description :	Caliper Bridge
1- T177	Bridge
2- T129	Bush

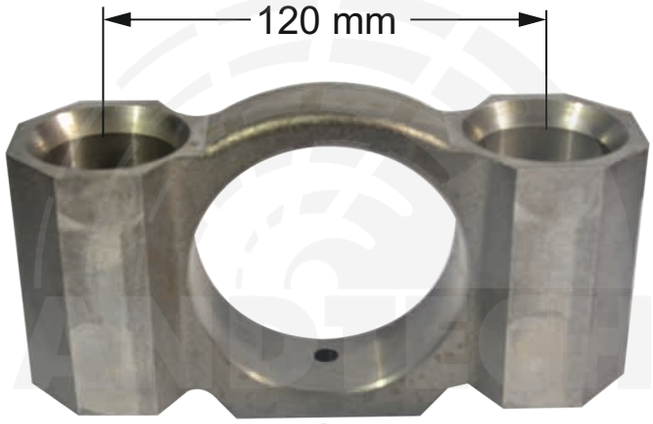

1

2

ANDTECH No :	0810 20476
Org. Ref. No :	
Application :	DX 225
Description :	Caliper Bridge
1- T419	Bridge
2- T129	Bush

www.andacotomotiv.com

All original numbers, marks and models from vehicle manufacturers listed in this catalogue are for comparison purposes only, and may not be used in invoices.

MERITOR

ANDTECH No :	0810 20106
Org. Ref. No :	MCK1294
Application :	DX 195, DX225, DX 225-21
Description :	Caliper Shaft Repair Kit
1- T78	Shaft
2- HR3	Grease Nipple
3- K52	Seal
4- R4	Roller Bearing
5- R5	Roller Bearing
6- K91	Seal
7- CN3	Gasket
8- T176	Cover
9- C38	Screw M8x20mm
10- K90	Dust Cover
11- C45	Screw M8x60mm
12- C46	Bolt Nut M8
13- T153	Detent Pin
14- S63	Cotter Pin
15- C39	Screw
16- S62	Washer
17- T146	Detent Pin
18- S33	Cotter Pin

ANDTECH No :	0810 20352
Org. Ref. No :	MCK1168
Application :	DX 195, DX 225, DX 225-21
Description :	Caliper Shaft Repair Kit
1- T78	Shaft
2- HR3	Grease Nipple
3- K52	Seal
4- R5	Roller Bearing
5- CN3	Gasket
6- T176	Cover
7- C38	Screw M8x20mm
8- C45	Screw M8x60mm
9- C46	Bolt Nut M8
10- T146	Detent Pin
11- S33	Cotter Pin
12- C39	Screw
13- S62	Washer
14- K91	Seal

www.andacotomotiv.com

MERITOR

ANDTECH No :	0810 20481
Org. Ref. No :	
Application :	DX 225
Description :	Caliper Housing and Piston Kit (Left)
1- T177	Bridge
2- T129	Bush
3- T179	Center Gear
4- T180	Gear
5- T181	Gear
6- T535	Piston

ANDTECH No :	0810 20482
Org. Ref. No :	
Application :	DX 225
Description :	Caliper Housing and Piston Kit (Right)
1- T177	Bridge
2- T129	Bush
3- T179	Center Gear
4- T180	Gear
5- T181	Gear
6- T536	Piston

www.andacotomotiv.com

All original numbers, marks and models from vehicle manufacturers listed in this catalogue are for comparison purposes only, and may not be used in invoices.

MERITOR

ANDTECH No :	0810 20483
Org. Ref. No :	
Application :	DX 225
Description :	Caliper Repair Kit (Left)
1- T419	Bridge
2- T487	Push Plate
3- T129	Bush
4- T535	Piston
5- T180	Gear
6- T533	Screw
7- C29	Screw M12x1,75x25mm
8- S50	Wavy Washer
9- SK3	Snap Ring
10- S90	Pin
11- S39	Metal Tap (37x15mm)
12- K116	Boot
13- K115	Dust Cover

ANDTECH No :	0810 20484
Org. Ref. No :	
Application :	DX 225
Description :	Caliper Repair Kit (Right)
1- T419	Bridge
2- T487	Push Plate
3- T129	Bush
4- T536	Piston
5- T180	Gear
6- T534	Screw
7- C29	Screw M12x1,75x25mm
8- S50	Wavy Washer
9- SK3	Snap Ring
10- S90	Pin
11- S39	Metal Tap (37x15mm)
12- K116	Boot
13- K115	Dust Cover

www.andacotomotiv.com

MERITOR

ANDTECH No :	0810 20298
Org. Ref. No :	
Application :	DX 195, DX 225, DX 225-21
Description :	Caliper Shaft Repair Kit
1- T78	Shaft
2- HR3	Grease Nipple
3- K52	Seal
4- R5	Roller Bearing

ANDTECH No :	0810 20104
Org. Ref. No :	
Application :	DX 195, DX 225, DX 225-21
Description :	Caliper Shaft Kit
1- T78	Shaft
2- HR3	Grease Nipple
3- K52	Seal

ANDTECH No :	0810 20116
Org. Ref. No :	CMSK.19.3
Application :	DX 195, DX 225, DX 225-21
Description :	Caliper Gear Repair Kit
1- T179	Center Gear
2- T181	Gear

www.andacotomotiv.com

All original numbers, marks and models from vehicle manufacturers listed in this catalogue are for comparison purposes only, and may not be used in invoices.

MERITOR

ANDTECH No :	0810 20127
Org. Ref. No :	
Application :	DX 195, DX 225, DX 225-21
Description :	Caliper Repair Kit
1- T176	Cover
2- R5	Roller Bearing
3- K90	Dust Cover
4- K91	Seal
5- CN3	Gasket
6- C38	Screw M8x20mm

ANDTECH No :	0810 20110
Org. Ref. No :	
Application :	DX 195
Description :	Caliper Push Plate (Right)
1- T183	Push Plate
2- T184	Screw
3- C35	Screw M10x20mm
4- S90	Pin

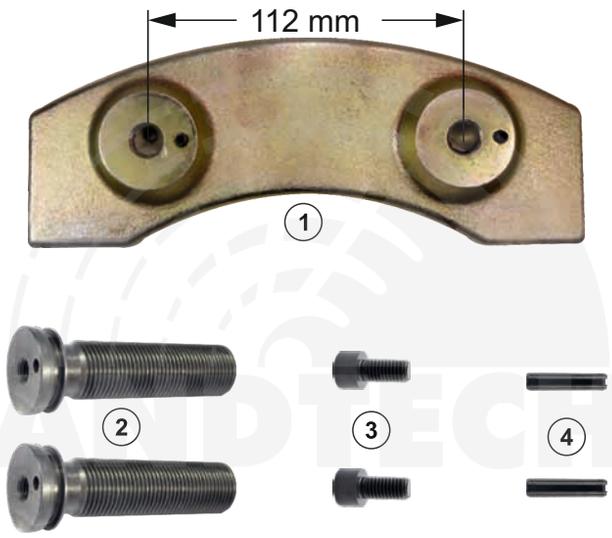

ANDTECH No :	0810 20111
Org. Ref. No :	
Application :	DX 195
Description :	Caliper Push Plate (Left)
1- T183	Push Plate
2- T185	Screw
3- C35	Screw M10x20mm
4- S90	Pin

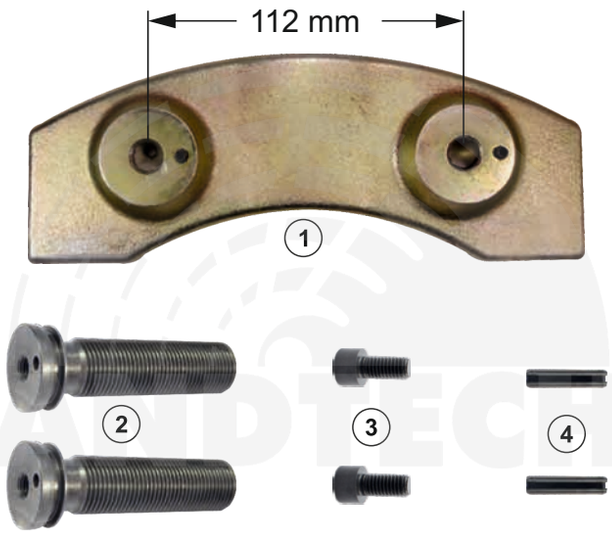

www.andacotomotiv.com

MERITOR

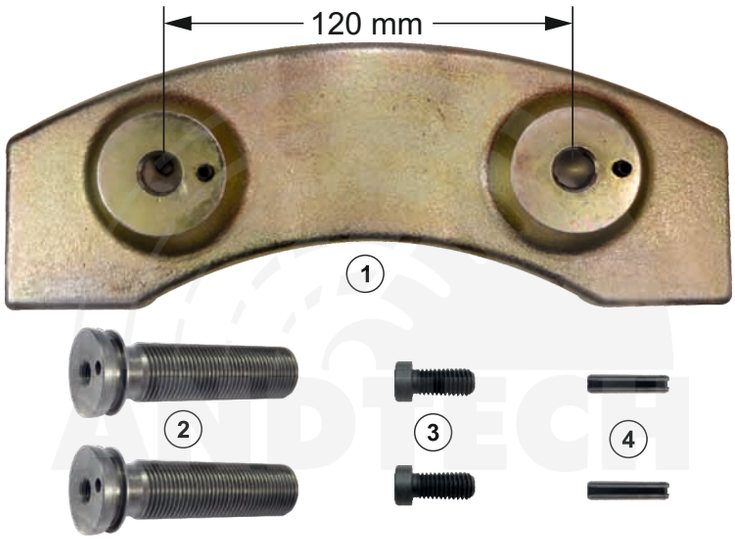

ANDTECH No :	0810 20477
Org. Ref. No :	
Application :	DX 225
Description :	Caliper Push Plate (Left)
1- T487	Push Plate
2- T533	Screw
3- C29	Screw M12x1,75x25mm
4- S90	Pin

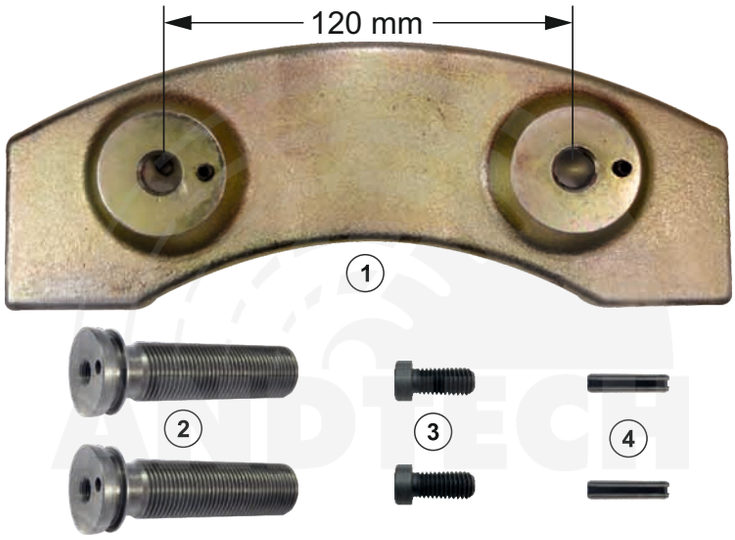

ANDTECH No :	0810 20478
Org. Ref. No :	
Application :	DX 225
Description :	Caliper Push Plate (Right)
1- T487	Push Plate
2- T534	Screw
3- C29	Screw M12x1,75x25mm
4- S90	Pin

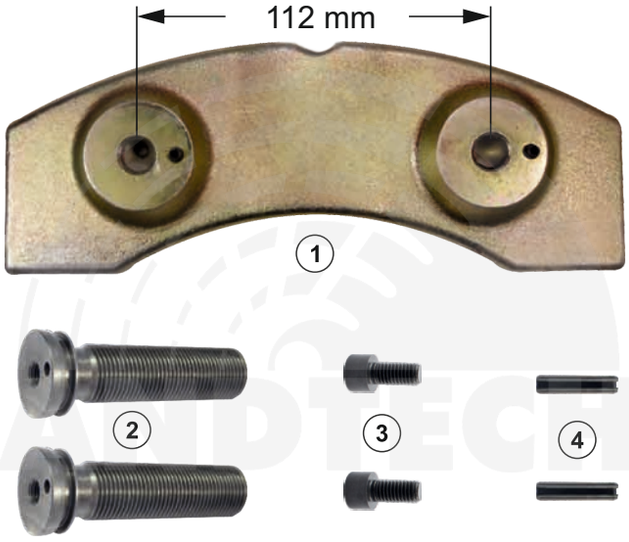

ANDTECH No :	0810 20125
Org. Ref. No :	
Application :	DX 225-21
Description :	Caliper Push Plate (Right)
1- T241	Push Plate
2- T184	Screw
3- C35	Screw M10x20mm
4- S90	Pin

www.andacotomotiv.com

All original numbers, marks and models from vehicle manufacturers listed in this catalogue are for comparison purposes only, and may not be used in invoices.

MERITOR

ANDTECH No :	0810 20126
Org. Ref. No :	
Application :	DX 225-21
Description :	Caliper Push Plate (Left)
1- T241	Push Plate
2- T185	Screw
3- C35	Screw M10x20mm
4- S90	Pin

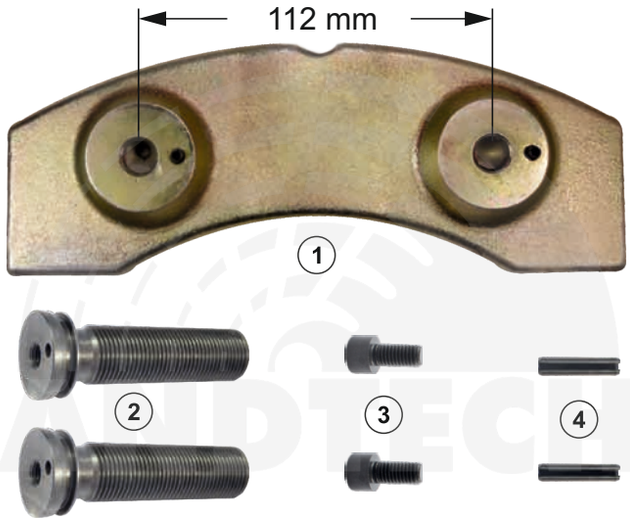

ANDTECH No :	0810 20112
Org. Ref. No :	
Application :	DX 195, DX 225-21
Description :	Caliper Repair Kit (Right)
1- T178	Guide Pin
2- T180	Gear
3- S50	Wavy Washer
4- SK3	Snap Ring

ANDTECH No :	0810 20113
Org. Ref. No :	
Application :	DX 195, DX 225-21
Description :	Caliper Repair Kit (Left)
1- T182	Guide Pin
2- T180	Gear
3- S50	Wavy Washer
4- SK3	Snap Ring

www.andacotomotiv.com

MERITOR

ANDTECH No :	0810 20114
Org. Ref. No :	
Application :	DX 195, DX 225-21
Description :	Caliper Repair Kit (Right)
1- T178	Guide Pin
2- T180	Gear
3- T184	Screw
4- S50	Wavy Washer
5- SK3	Snap Ring

ANDTECH No :	0810 20115
Org. Ref. No :	
Application :	DX 195, DX 225-21
Description :	Caliper Repair Kit (Left)
1- T182	Guide Pin
2- T180	Gear
3- T185	Screw
4- S50	Wavy Washer
5- SK3	Snap Ring

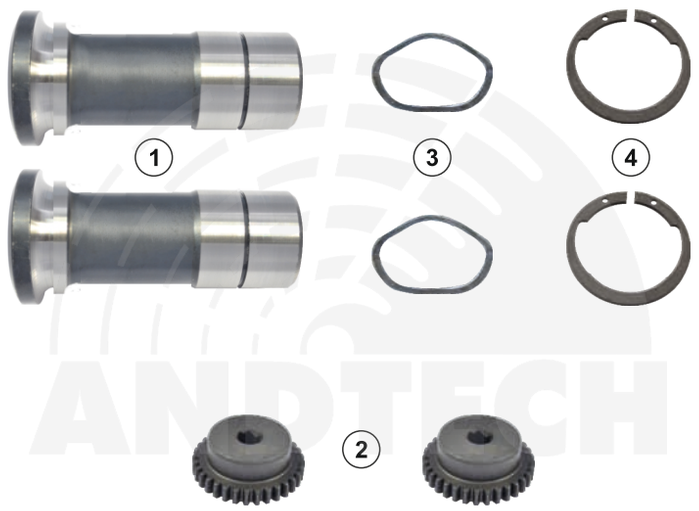

ANDTECH No :	0810 20479
Org. Ref. No :	
Application :	DX 225
Description :	Caliper Repair Kit (Left)
1- T535	Guide Pin
2- T180	Gear
3- S50	Wavy Washer
4- SK3	Snap Ring

www.andacotomotiv.com

All original numbers, marks and models from vehicle manufacturers listed in this catalogue are for comparison purposes only, and may not be used in invoices.

MERITOR

ANDTECH No :	0810 20480
Org. Ref. No :	
Application :	DX 225
Description :	Caliper Repair Kit (Right)
1- T536	Guide Pin
2- T180	Gear
3- S50	Wavy Washer
4- SK3	Snap Ring

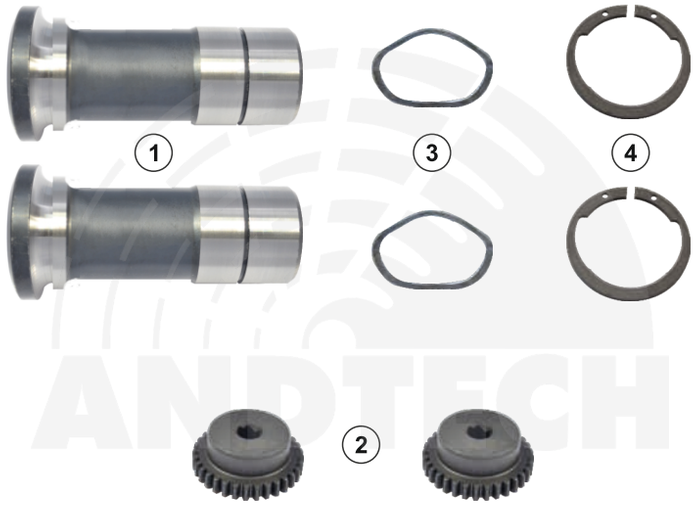

ANDTECH No :	0810 20128
Org. Ref. No :	MCK1160 - 21224954
Application :	DX 195
Description :	Caliper Lever
1- T223	Lever (80mm)
2- C45	Screw M8x60mm
3- C46	Bolt Nut M8

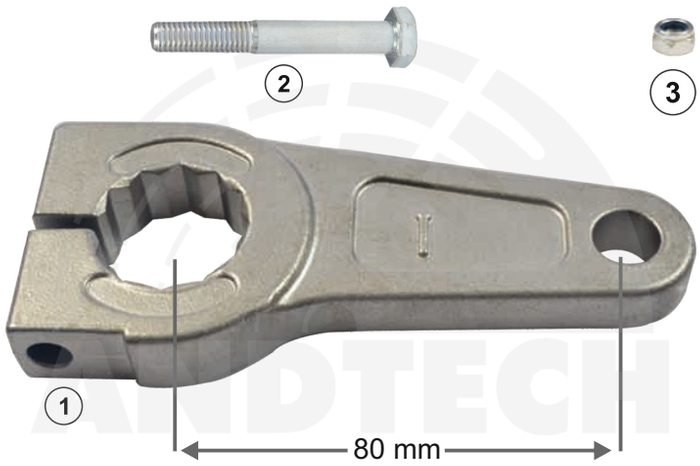

ANDTECH No :	0810 20129
Org. Ref. No :	MCK1161 - 21224955
Application :	DX 225, DX 225-21
Description :	Caliper Lever
1- T224	Lever (90mm)
2- C45	Screw M8x60mm
3- C46	Bolt Nut M8

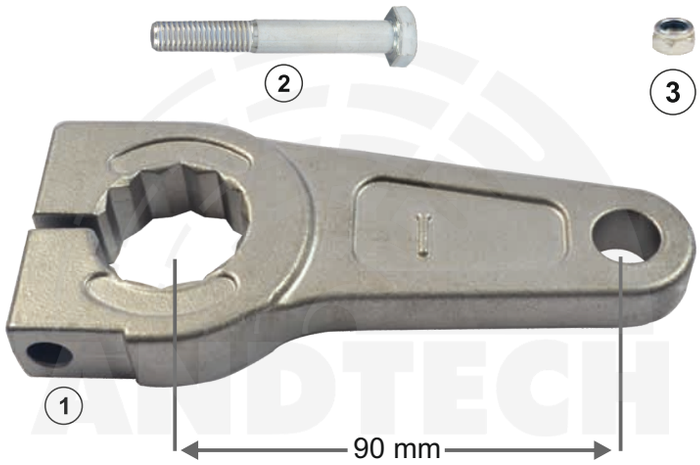

www.andacotomotiv.com

MERITOR

ANDTECH No :	0810 20130
Org. Ref. No :	
Application :	DX 195, DX 225, DX 225-21
Description :	Caliper Roller Bearing
1- R5	Roller Bearing

ANDTECH No :	0810 20131
Org. Ref. No :	
Application :	DX 195, DX 225, DX 225-21
Description :	Caliper Roller Bearing
1- R4	Roller Bearing

ANDTECH No :	0810 20132
Org. Ref. No :	MCK1344 - DSB3
Application :	DX 195, DX 225, DX 225-21
Description :	Caliper Bearing Kit
1- R5	Roller Bearing
2- R4	Roller Bearing
3- T129	Bush

www.andacotomotiv.com

All original numbers, marks and models from vehicle manufacturers listed in this catalogue are for comparison purposes only, and may not be used in invoices.

MERITOR

ANDTECH No :	0810 20301
Org. Ref. No :	
Application :	DX 195, DX 225, DX 225-21
Description :	Caliper Seal
1- K91	Seal

ANDTECH No :	0810 20302
Org. Ref. No :	1205 X 2572 - 21225226 - 1488186
Application :	DX 195, DX 225, DX 225-21
Description :	Caliper Dust Cover
1- K90	Dust Cover

ANDTECH No :	0810 20422
Org. Ref. No :	
Application :	DX 195 - DX 225
Description :	Caliper Repair Kit
1- S232	Washer

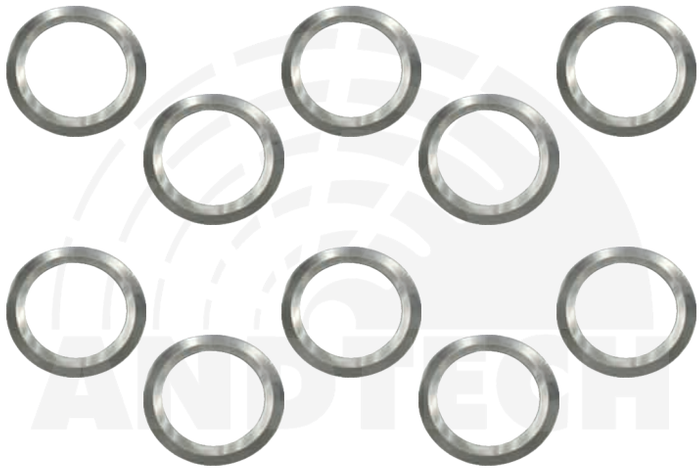

www.andacotomotiv.com

MERITOR

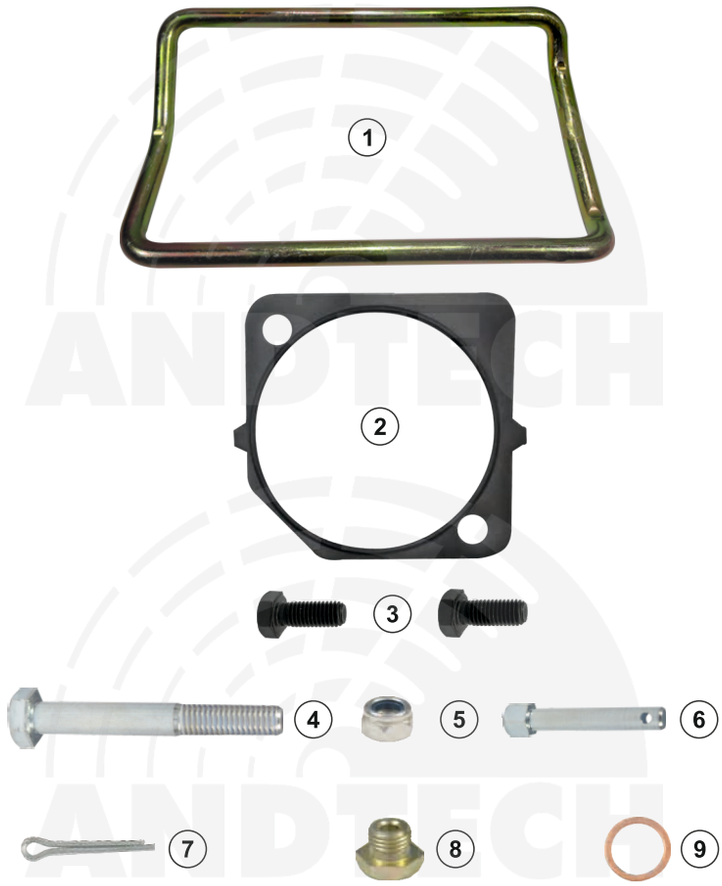

ANDTECH No :	0810 20133
Org. Ref. No :	MCK1154
Application :	DX 195
Description :	Caliper Repair Kit
1- S58	Stabilizer Bar
2- CN3	Gasket
3- C38	Screw M8x20mm
4- C45	Screw M8x60mm
5- C46	Bolt Nut M8
6- T146	Detent Pin
7- S33	Cotter Pin
8- C39	Screw
9- S62	Washer

ANDTECH No :	0810 20134
Org. Ref. No :	MCK1159
Application :	DX 225, DX 225-21
Description :	Caliper Repair Kit
1- S66	Stabilizer Bar
2- S64	Metal Shim
3- CN3	Gasket
4- C38	Screw M8x20mm
5- C45	Screw M8x60mm
6- C46	Bolt Nut M8
7- C39	Screw
8- S62	Washer

www.andacotomotiv.com

All original numbers, marks and models from vehicle manufacturers listed in this catalogue are for comparison purposes only, and may not be used in invoices.

MERITOR

ANDTECH No :	0810 20135
Org. Ref. No :	
Application :	DX 195, DX 225, DX 225-21
Description :	Caliper Repair Kit
1- K90	Dust Cover
2- T153	Detent Pin
3- S63	Cotter Pin
4- T146	Detent Pin
5- S33	Cotter Pin

ANDTECH No :	0810 20136
Org. Ref. No :	
Application :	DX 195, DX 225, DX 225-21
Description :	Caliper Repair Kit
1- K90	Dust Cover
2- T153	Detent Pin
3- S63	Cotter Pin
4- T146	Detent Pin
5- S33	Cotter Pin
6- S64	Metal Shim
7- C38	Screw M8x20mm

www.andacotomotiv.com

MERITOR

ANDTECH No :	0810 20137
Org. Ref. No :	
Application :	DX 195
Description :	Caliper Stabilizer Bar
1- S58	Stabilizer Bar

ANDTECH No :	0810 20138
Org. Ref. No :	
Application :	DX 225, DX 225-21
Description :	Caliper Stabilizer Bar
1- S66	Stabilizer Bar

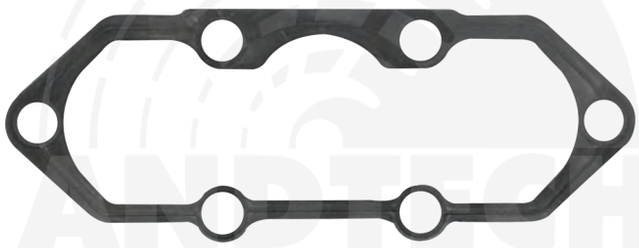

ANDTECH No :	0810 20487
Org. Ref. No :	
Application :	DX225
Description :	Caliper End Plate Gasket
1- CN7	End Plate Gasket

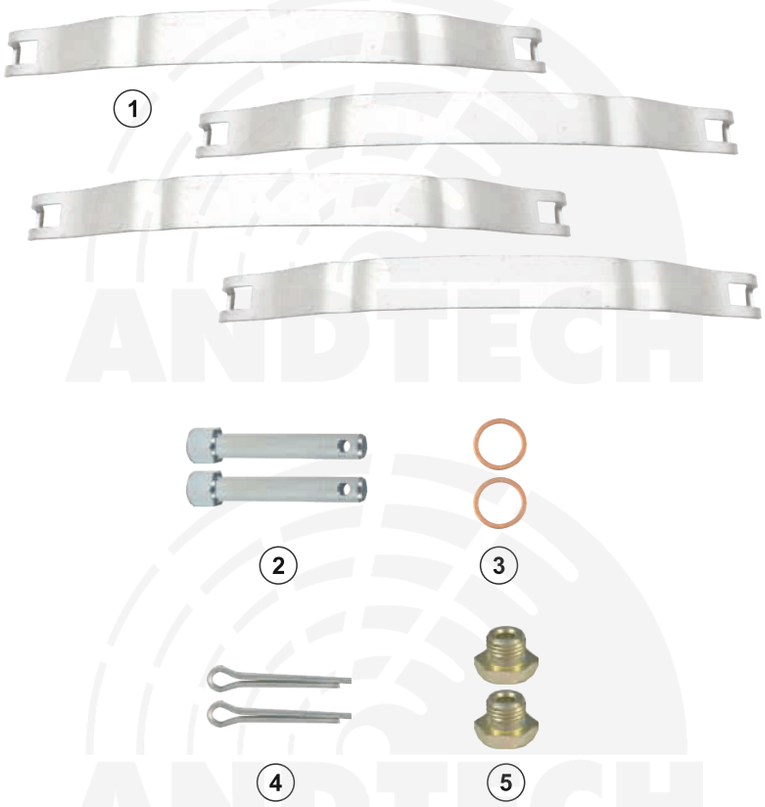

ANDTECH No :	0810 20496
Org. Ref. No :	WVA 29124 - MBA100
Application :	DX 195
Description :	Pad Retainer Kit
1- S208	Retention Spring
2- T146	Detent Pin
3- S62	Washer
4- S33	Cotter Pin
5- C39	Screw

www.andacotomotiv.com

All original numbers, marks and models from vehicle manufacturers listed in this catalogue are for comparison purposes only, and may not be used in invoices.

MERITOR

ANDTECH No :	0810 20139
Org. Ref. No :	15224836SR
Application :	DX 195
Description :	Caliper Cover Plate (Right)
1- T243	Cover Plate
2- S39	Metal Tap (37x15mm)

ANDTECH No :	0810 20140
Org. Ref. No :	15224837SR
Application :	DX 195
Description :	Caliper Cover Plate (Left)
1- T242	Cover Plate
2- S39	Metal Tap (37x15mm)

ANDTECH No :	0810 20359
Org. Ref. No :	MCK1185 - 68323215
Application :	DX 195
Description :	Caliper Carrier
1- T318	Carrier 19.5"

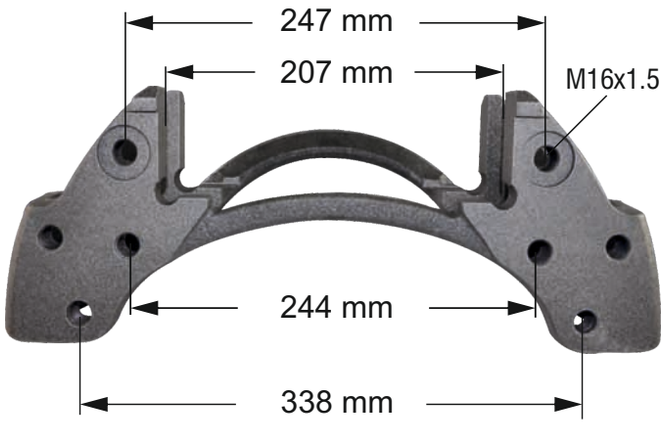

www.andacotomotiv.com

MERITOR

ANDTECH No :	0810 20308
Org. Ref. No :	
Application :	ELSA 2
Description :	Caliper Complete Overhaul Repair Kit (Left)

www.andacotomotiv.com

All original numbers, marks and models from vehicle manufacturers listed in this catalogue are for comparison purposes only, and may not be used in invoices.

MERITOR

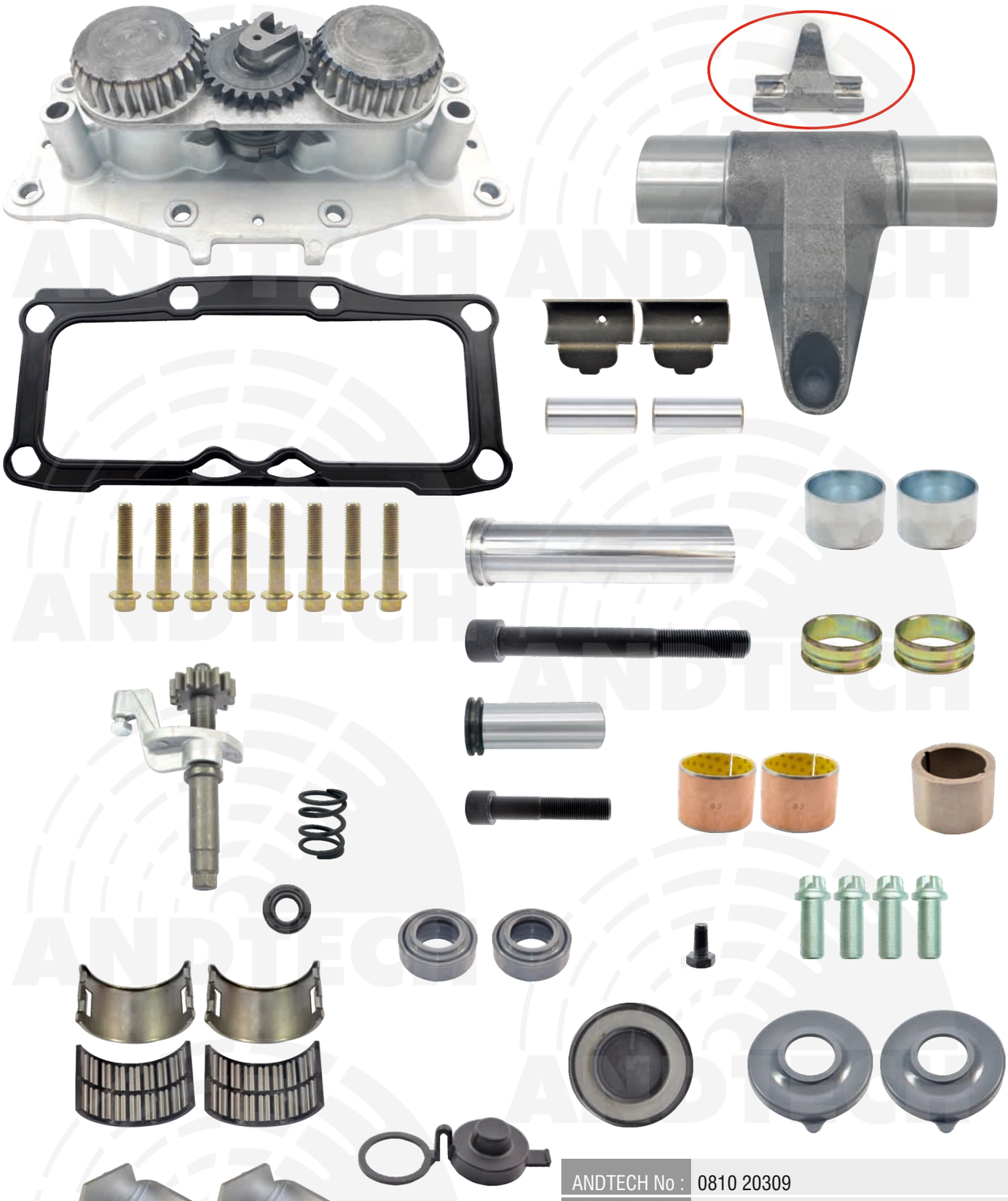

ANDTECH No :	0810 20309
Org. Ref. No :	
Application :	ELSA 2
Description :	Caliper Complete Overhaul Repair Kit (Right)

www.andacotomotiv.com

All original numbers, marks and models from vehicle manufacturers listed in this catalogue are for comparison purposes only, and may not be used in invoices.

MERITOR

ANDTECH No :	0810 20310
Org. Ref. No :	
Application :	ELSA 195, ELSA 225
Description :	Caliper Complete Overhaul Repair Kit

www.andacotomotiv.com

All original numbers, marks and models from vehicle manufacturers listed in this catalogue are for comparison purposes only, and may not be used in invoices.

MERITOR

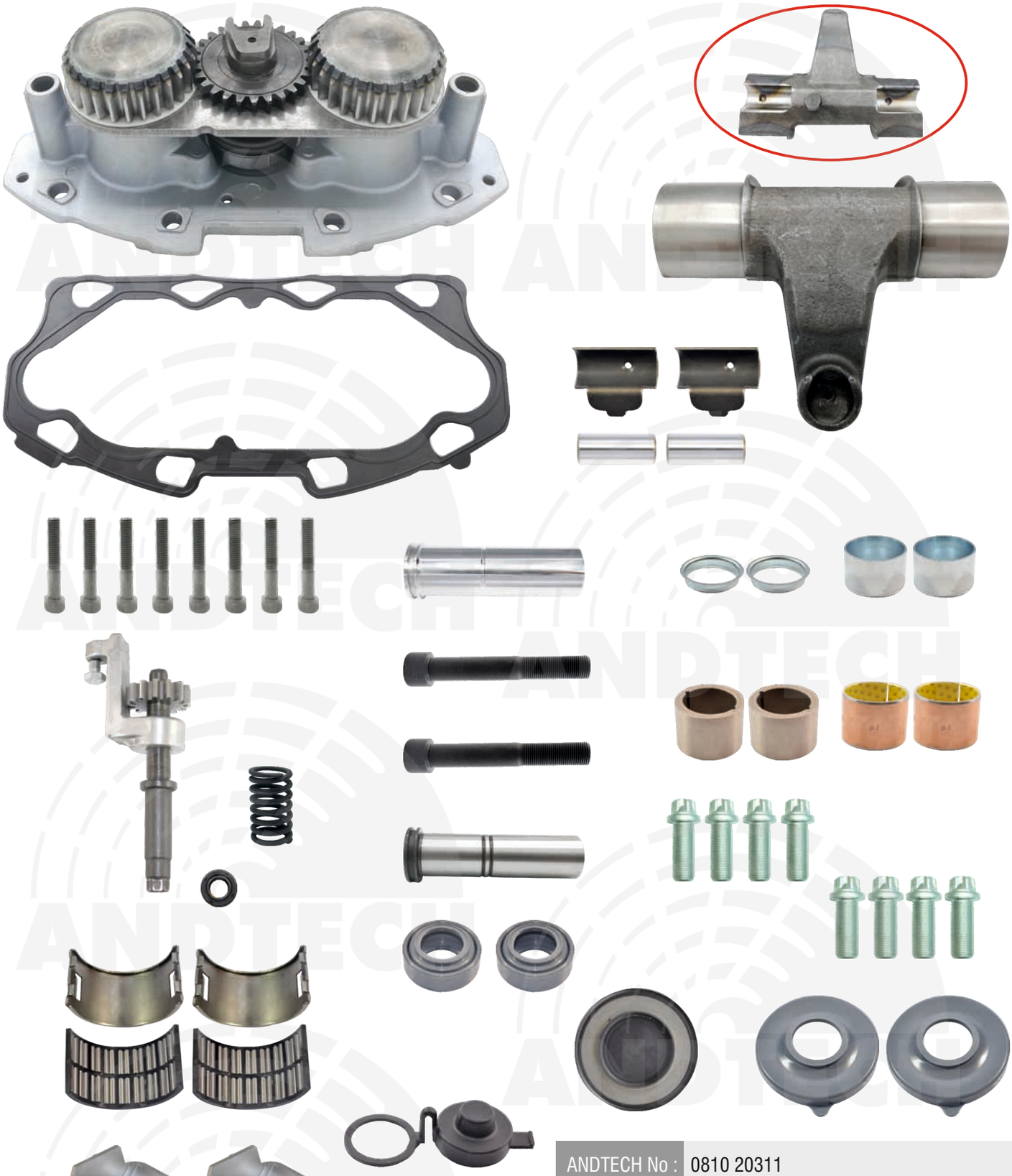

ANDTECH No :	0810 20311
Org. Ref. No :	
Application :	ELSA 195, ELSA 225
Description :	Caliper Complete Overhaul Repair Kit

www.andacotomotiv.com

All original numbers, marks and models from vehicle manufacturers listed in this catalogue are for comparison purposes only, and may not be used in invoices.

MERITOR

ANDTECH No :	0810 20312
Org. Ref. No :	
Application :	EX 225
Description :	Caliper Complete Overhaul Repair Kit

www.andacotomotiv.com

All original numbers, marks and models from vehicle manufacturers listed in this catalogue are for comparison purposes only, and may not be used in invoices.

MERITOR

ANDTECH No :	0810 20314
Org. Ref. No :	
Application :	DUCO (FRONT - RIGHT/LEFT)
Description :	Caliper Complete Overhaul Repair Kit

www.andacotomotiv.com

All original numbers, marks and models from vehicle manufacturers listed in this catalogue are for comparison purposes only, and may not be used in invoices.

MERITOR

ANDTECH No :	0810 20315
Org. Ref. No :	
Application :	DUCO (REAR - LEFT)
Description :	Caliper Complete Overhaul Repair Kit

www.andacotomotiv.com

All original numbers, marks and models from vehicle manufacturers listed in this catalogue are for comparison purposes only, and may not be used in invoices.

MERITOR

ANDTECH No :	0810 20316
Org. Ref. No :	
Application :	DUCO (REAR - RIGHT)
Description :	Caliper Complete Overhaul Repair Kit

www.andacotomotiv.com

All original numbers, marks and models from vehicle manufacturers listed in this catalogue are for comparison purposes only, and may not be used in invoices.

MERITOR

ANDTECH No :	0810 20317
Org. Ref. No :	
Application :	D LISA (LEFT)
Description :	Caliper Complete Overhaul Repair Kit

www.andacotomotiv.com

All original numbers, marks and models from vehicle manufacturers listed in this catalogue are for comparison purposes only, and may not be used in invoices.

MERITOR

ANDTECH No :	0810 20318
Org. Ref. No :	
Application :	D LISA (RIGHT)
Description :	Caliper Complete Overhaul Repair Kit

www.andacotomotiv.com

All original numbers, marks and models from vehicle manufacturers listed in this catalogue are for comparison purposes only, and may not be used in invoices.

MERITOR

ANDTECH No :	0810 20319
Org. Ref. No :	
Application :	ELSA 1 (LEFT)
Description :	Caliper Complete Overhaul Repair Kit

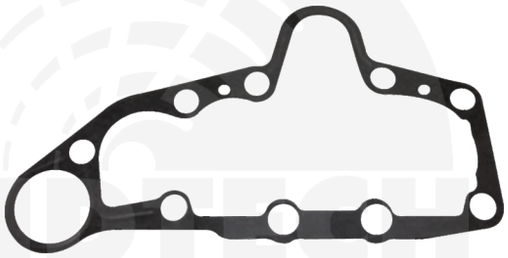

www.andacotomotiv.com

All original numbers, marks and models from vehicle manufacturers listed in this catalogue are for comparison purposes only, and may not be used in invoices.

MERITOR

ANDTECH No :	0810 20320
Org. Ref. No :	
Application :	ELSA 1 (RIGHT)
Description :	Caliper Complete Overhaul Repair Kit

www.andacotomotiv.com

All original numbers, marks and models from vehicle manufacturers listed in this catalogue are for comparison purposes only, and may not be used in invoices.

MERITOR

ANDTECH No :	0810 20321
Org. Ref. No :	
Application :	ELSA 1 (LEFT)
Description :	Caliper Complete Overhaul Repair Kit

www.andacotomotiv.com

All original numbers, marks and models from vehicle manufacturers listed in this catalogue are for comparison purposes only, and may not be used in invoices.

MERITOR

ANDTECH No :	0810 20322
Org. Ref. No :	
Application :	ELSA 1 (RIGHT)
Description :	Caliper Complete Overhaul Repair Kit

www.andacotomotiv.com

All original numbers, marks and models from vehicle manufacturers listed in this catalogue are for comparison purposes only, and may not be used in invoices.

MERITOR

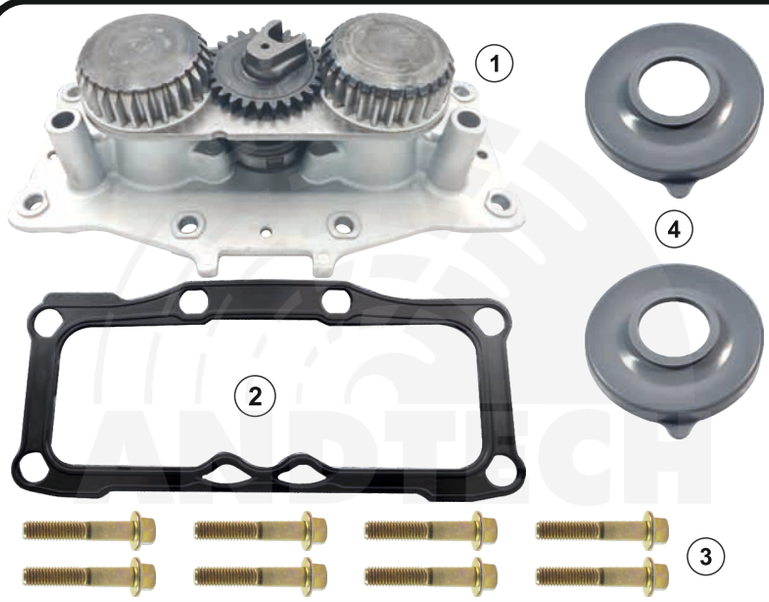

ANDTECH No :	0810 20141
Org. Ref. No :	
Application :	ELSA 2
Description :	Calibration Mechanism Complete
1- T259	Calibration Mechanism Complete
2- K34	Gasket
3- C28	Screw M8x1,25x45mm
4- K23	Dust Cover

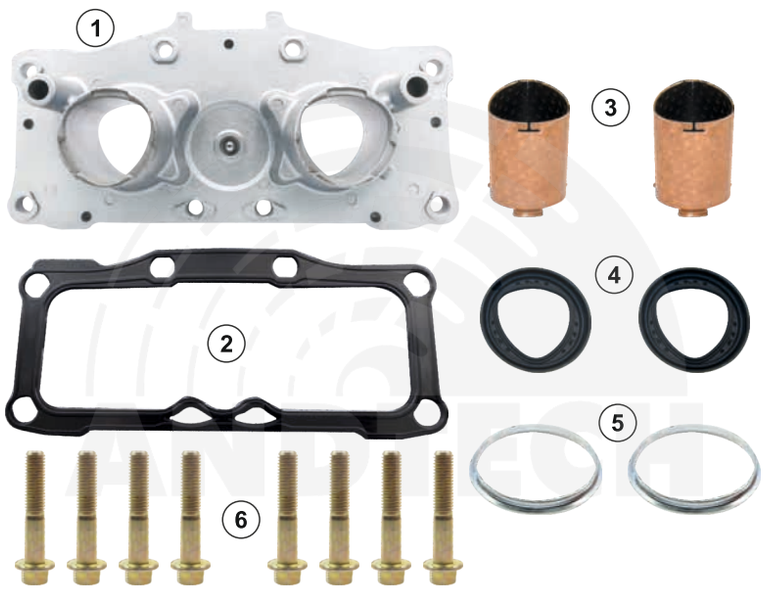

ANDTECH No :	0810 20142
Org. Ref. No :	68324625
Application :	ELSA 2
Description :	Caliper Calibration Mechanism (Aluminium)
1- T65	Aluminium Cap (Ball Bearing)
2- K34	Gasket
3- S31	Bush
4- K51	Triangle Seal
5- S32	Ring
6- C28	Screw M8x1,25x45mm

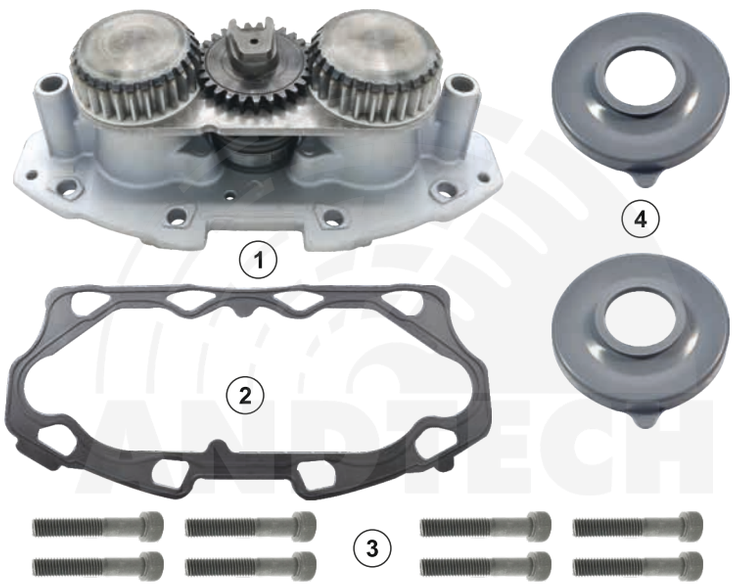

ANDTECH No :	0810 20143
Org. Ref. No :	
Application :	ELSA 195, ELSA 225, EX 225
Description :	Calibration Mechanism Complete
1- T260	Calibration Mechanism Complete
2- K93	Gasket
3- C53	Screw M8x1,25x45mm
4- K23	Dust Cover

www.andacotomotiv.com

All original numbers, marks and models from vehicle manufacturers listed in this catalogue are for comparison purposes only, and may not be used in invoices.

MERITOR

ANDTECH No :	0810 20144
Org. Ref. No :	
Application :	ELSA 195, ELSA 225, EX 225
Description :	Caliper Calibration Mechanism (Aluminium)
1- T65A	Aluminium Cap (Ball Bearing)
2- K93	Gasket
3- S31	Bush
4- K51	Triangle Seal
5- S32	Ring
6- C53	Screw M8x1,25x45mm

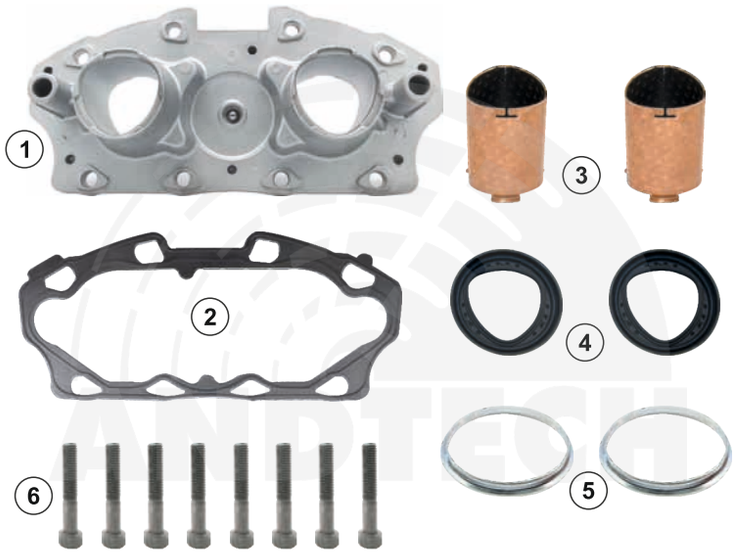

ANDTECH No :	0810 20145
Org. Ref. No :	
Application :	ELSA 2, ELSA 195, ELSA 225, EX 225
Description :	Caliper Calibration Gear
1- T64	Brake Lining Calibration Gear

ANDTECH No :	0810 20146
Org. Ref. No :	
Application :	ELSA 2, ELSA 195, ELSA 225, EX 225
Description :	Caliper Adjusting Mechanism
1- T63	Adjusting Mechanism

www.andacotomotiv.com

MERITOR

ANDTECH No :	0810 20147
Org. Ref. No :	
Application :	ELSA 2
Description :	Caliper Adjusting Gear (Left)
1- T68	Adjusting Gear
2- Y15	Spring
3- K31	Seal

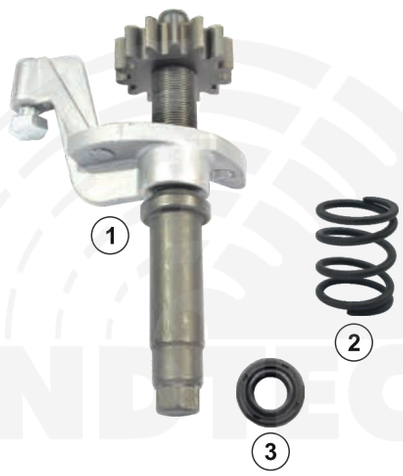

ANDTECH No :	0810 20148
Org. Ref. No :	
Application :	ELSA 2
Description :	Caliper Adjusting Gear (Right)
1- T67	Adjusting Gear
2- Y15	Spring
3- K31	Seal

ANDTECH No :	0810 20149
Org. Ref. No :	
Application :	ELSA 195, ELSA 225, EX 225
Description :	Caliper Adjusting Gear
1- T188	Adjusting Gear
2- Y21	Spring
3- K31	Seal

www.andacotomotiv.com

All original numbers, marks and models from vehicle manufacturers listed in this catalogue are for comparison purposes only, and may not be used in invoices.

MERITOR

ANDTECH No :	0810 20379
Org. Ref. No :	
Application :	ELSA 2 - RADIAL
Description :	Caliper Adjusting Gear (Left)
1- T344	Adjusting Gear
2- Y15	Spring
3- K31	Seal

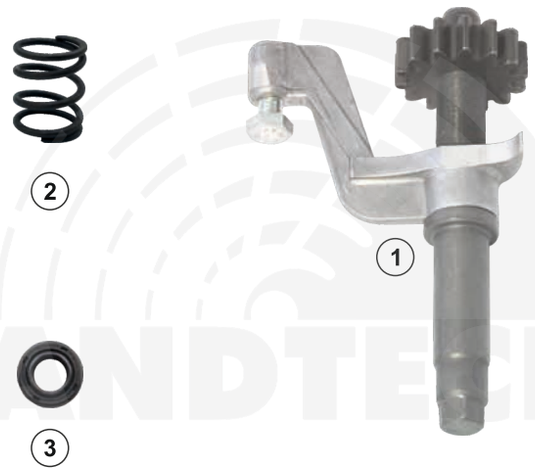

ANDTECH No :	0810 20380
Org. Ref. No :	
Application :	ELSA 2 - RADIAL
Description :	Caliper Adjusting Gear (Right)
1- T345	Adjusting Gear
2- Y15	Spring
3- K31	Seal

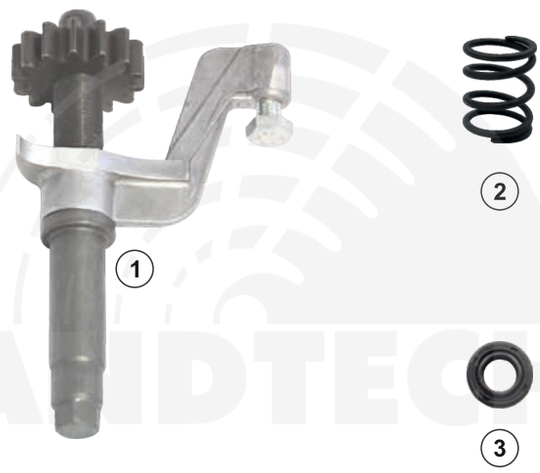

ANDTECH No :	0810 20454
Org. Ref. No :	
Application :	ELSA 1
Description :	Caliper Adjusting Gear
1- T493	Adjusting Gear
2- Y58	Spring

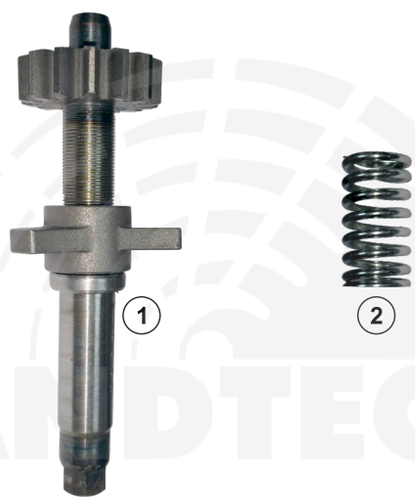

www.andacotomotiv.com

MERITOR

ANDTECH No :	0810 20150
Org. Ref. No :	
Application :	ELSA 2, ELSA 195, ELSA 225, EX 225
Description :	Caliper Repair Kit
1- S31	Bush
2- K51	Triangle Seal
3- S32	Ring

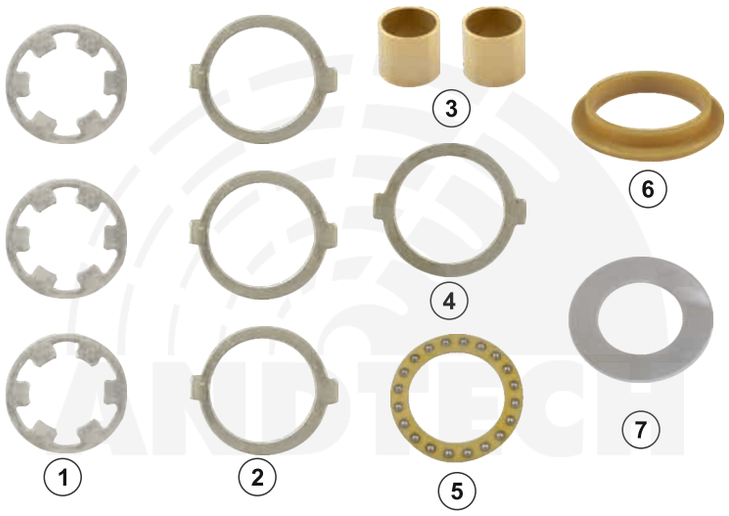

ANDTECH No :	0810 20151
Org. Ref. No :	
Application :	ELSA 2, ELSA 195, ELSA 225, EX 225
Description :	Caliper Mechanism Repair Kit
1- S51	Metal Sheet
2- S52	Metal Sheet
3- B29	Bush
4- S53	Metal Sheet
5- P7	Ground Bearing
6- P8	Ring (Plastic)
7- S38	Washer

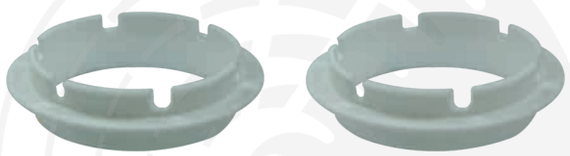

ANDTECH No :	0810 20296
Org. Ref. No :	
Application :	ELSA 2, ELSA 195, ELSA 225, EX 225
Description :	Caliper Adjusting Mechanism
1- P11	Ring

www.andacotomotiv.com

All original numbers, marks and models from vehicle manufacturers listed in this catalogue are for comparison purposes only, and may not be used in invoices.

MERITOR

ANDTECH No :	0810 20152
Org. Ref. No :	MCK1113 - SJ4110 - 85102093 - 3092267
Application :	C DUCO, D DUCO, LE DUCO
Description :	Caliper Adjusting Mechanism (Front-Right/Left)
1- T39	Adjusting Mechanism
2- K31	Seal

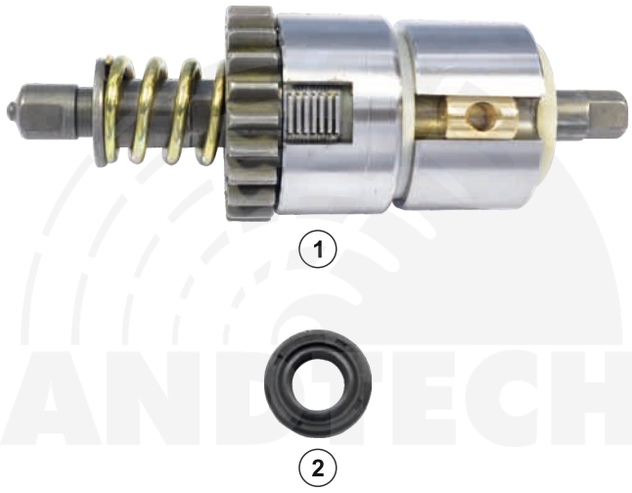

ANDTECH No :	0810 20153
Org. Ref. No :	MCK1111 - SJ4102 - 85102095 - 3092265
Application :	C DUCO, D DUCO, LE DUCO
Description :	Caliper Adjusting Mechanism (Rear-Left)
1- T41	Adjusting Mechanism
2- K31	Seal

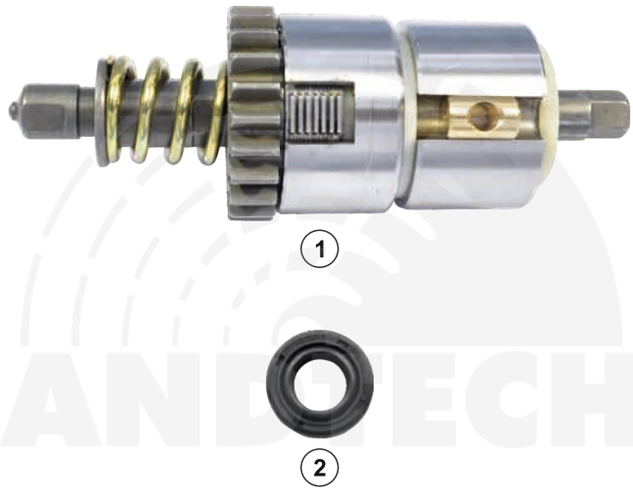

ANDTECH No :	0810 20154
Org. Ref. No :	MCK1112 - SJ4103 - 85102096 - 3092266
Application :	C DUCO, D DUCO, LE DUCO
Description :	Caliper Adjusting Mechanism (Rear-Right)
1- T40	Adjusting Mechanism
2- K31	Seal

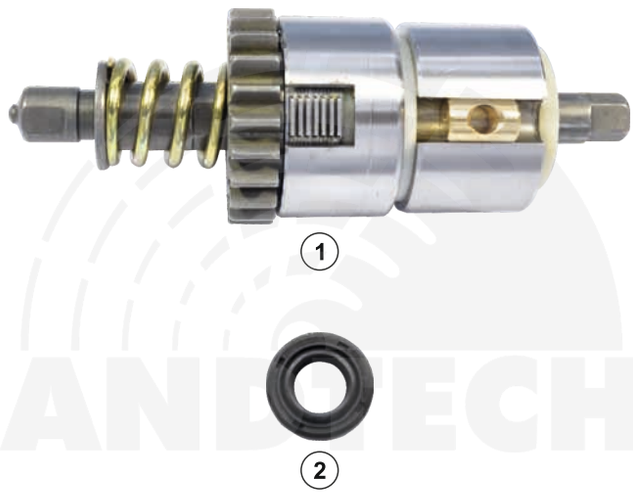

www.andacotomotiv.com

MERITOR

ANDTECH No :	0810 20155
Org. Ref. No :	68322297PK10
Application :	C DUCO, D DUCO, LE DUCO
Description :	Caliper Eccentric Seal
1- K30	Eccentric Seal

ANDTECH No :	0810 20156
Org. Ref. No :	MCK1237 - 3092263
Application :	C DUCO, D DUCO, LE DUCO
Description :	Caliper Adjusting Mechanism Repair Kit (Right)
1- T37	Adjusting Mechanism
2- T36	Tappet
3- SK1	Snap Ring
4- K23	Dust Cover
5- K49	Mechanism Seal
6- P5	Bush (Plastic)

ANDTECH No :	0810 20157
Org. Ref. No :	
Application :	C DUCO, D DUCO, LE DUCO
Description :	Caliper Adjusting Mechanism Repair Kit (Right) / Half Kit
1- T37	Adjusting Mechanism
2- T36	Tappet
3- SK1	Snap Ring
4- K23	Dust Cover
5- K49	Mechanism Seal
6- P5	Bush (Plastic)

www.andacotomotiv.com

All original numbers, marks and models from vehicle manufacturers listed in this catalogue are for comparison purposes only, and may not be used in invoices.

MERITOR

ANDTECH No :	0810 20158
Org. Ref. No :	MCK1236 - 3092262
Application :	C DUCO, D DUCO, LE DUCO
Description :	Caliper Adjusting Mechanism Repair Kit (Left)
1- T38	Adjusting Mechanism
2- T36	Tappet
3- SK1	Snap Ring
4- K23	Dust Cover
5- K49	Mechanism Seal
6- P5	Bush (Plastic)

ANDTECH No :	0810 20159
Org. Ref. No :	
Application :	C DUCO, D DUCO, LE DUCO
Description :	Caliper Adjusting Mechanism Repair Kit (Left) / Half Kit
1- T38	Adjusting Mechanism
2- T36	Tappet
3- SK1	Snap Ring
4- K23	Dust Cover
5- K49	Mechanism Seal
6- P5	Bush (Plastic)

ANDTECH No :	0810 20160
Org. Ref. No :	
Application :	ELSA 1
Description :	Caliper Adjusting Gear (Right-35 mm)
1- T53	Adjusting Gear

www.andacotomotiv.com

MERITOR

ANDTECH No :	0810 20161
Org. Ref. No :	
Application :	ELSA 1
Description :	Caliper Adjusting Gear (Left-35 mm)
1- T58	Adjusting Gear

ANDTECH No :	0810 20162
Org. Ref. No :	
Application :	ELSA 1
Description :	Caliper Adjusting Gear Kit (Right-35 mm)
1- T151	Adjusting Gear Sheet
2- T152	Metal Cap
3- T53	Adjusting Gear

ANDTECH No :	0810 20163
Org. Ref. No :	
Application :	ELSA 1
Description :	Caliper Adjusting Gear Kit (Left-35 mm)
1- T151	Adjusting Gear Sheet
2- T152	Metal Cap
3- T58	Adjusting Gear

www.andacotomotiv.com

All original numbers, marks and models from vehicle manufacturers listed in this catalogue are for comparison purposes only, and may not be used in invoices.

MERITOR

ANDTECH No :	0810 20164
Org. Ref. No :	
Application :	ELSA 1
Description :	Caliper Adjusting Gear Kit (Right-35 mm)
1- T151	Adjusting Gear Sheet
2- T152	Metal Cap
3- T53	Adjusting Gear
4- T237	Adjusting Gear Bush

ANDTECH No :	0810 20165
Org. Ref. No :	
Application :	ELSA 1
Description :	Caliper Adjusting Gear Kit (Left-35 mm)
1- T151	Adjusting Gear Sheet
2- T152	Metal Cap
3- T58	Adjusting Gear
4- T237	Adjusting Gear Bush

ANDTECH No :	0810 20166
Org. Ref. No :	
Application :	ELSA 1
Description :	Caliper Adjusting Gear (Right-37.5 mm)
1- T238	Adjusting Gear

www.andacotomotiv.com

MERITOR

ANDTECH No :	0810 20167
Org. Ref. No :	
Application :	ELSA 1
Description :	Caliper Adjusting Gear (Left-37.5 mm)
1- T239	Adjusting Gear

ANDTECH No :	0810 20168
Org. Ref. No :	
Application :	ELSA 1
Description :	Caliper Adjusting Gear Kit (Right-37.5 mm)
1- T226	Adjusting Gear Sheet
2- T152	Metal Cap
3- T238	Adjusting Gear

ANDTECH No :	0810 20169
Org. Ref. No :	
Application :	ELSA 1
Description :	Caliper Adjusting Gear Kit (Left-37.5 mm)
1- T226	Adjusting Gear Sheet
2- T152	Metal Cap
3- T239	Adjusting Gear

www.andacotomotiv.com

All original numbers, marks and models from vehicle manufacturers listed in this catalogue are for comparison purposes only, and may not be used in invoices.

MERITOR

ANDTECH No :	0810 20170
Org. Ref. No :	
Application :	ELSA 1
Description :	Caliper Adjusting Gear Kit (Right-37.5 mm)
1- T226	Adjusting Gear Sheet
2- T152	Metal Cap
3- T238	Adjusting Gear
4- T240	Adjusting Gear Bush

ANDTECH No :	0810 20171
Org. Ref. No :	
Application :	ELSA 1
Description :	Caliper Adjusting Gear Kit (Left-37.5 mm)
1- T226	Adjusting Gear Sheet
2- T152	Metal Cap
3- T239	Adjusting Gear
4- T240	Adjusting Gear Bush

www.andacotomotiv.com

MERITOR

ANDTECH No :	0810 20172
Org. Ref. No :	
Application :	ELSA 1
Description :	Caliper Adjusting Gear Bush (35 mm)
1- T237	Adjusting Gear Bush

ANDTECH No :	0810 20173
Org. Ref. No :	
Application :	ELSA 1
Description :	Caliper Adjusting Gear Bush (37.5 mm)
1- T240	Adjusting Gear Bush

ANDTECH No :	0810 20375
Org. Ref. No :	
Application :	LISA
Description :	Caliper Spring
1- Y53	Spring

www.andacotomotiv.com

All original numbers, marks and models from vehicle manufacturers listed in this catalogue are for comparison purposes only, and may not be used in invoices.

MERITOR

ANDTECH No :	0810 20174
Org. Ref. No :	
Application :	ELSA 1
Description :	Caliper Adjusting Mechanism (Right)
1- T54	Adjusting Mechanism Clutch
2- T227	Spring Pin

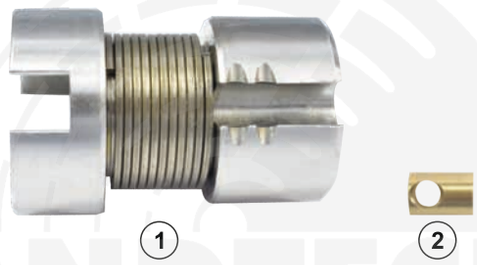

ANDTECH No :	0810 20175
Org. Ref. No :	
Application :	ELSA 1
Description :	Caliper Adjusting Mechanism (Left)
1- T55	Adjusting Mechanism Clutch
2- T227	Spring Pin

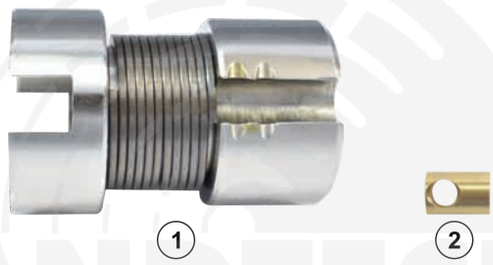

ANDTECH No :	0810 20176
Org. Ref. No :	
Application :	ELSA 1
Description :	Caliper Adjusting Gear Kit
1- T225	Adjusting Gear
2- Y38	Spring

www.andacotomotiv.com

MERITOR

ANDTECH No :	0810 20177
Org. Ref. No :	
Application :	ELSA 1
Description :	Caliper Adjusting Mechanism Repair Kit (Right)
1- T54	Adjusting Mechanism Clutch
2- T227	Spring Pin
3- T225	Adjusting Gear
4- Y38	Spring

ANDTECH No :	0810 20178
Org. Ref. No :	
Application :	ELSA 1
Description :	Caliper Adjusting Mechanism Repair Kit (Left)
1- T55	Adjusting Mechanism Clutch
2- T227	Spring Pin
3- T225	Adjusting Gear
4- Y38	Spring

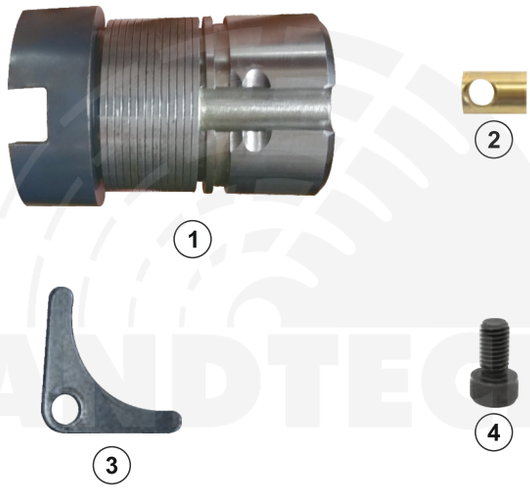

ANDTECH No :	0810 20413
Org. Ref. No :	
Application :	ELSA 1
Description :	Caliper Adjusting Mechanism (Right)
1- T494	Adjusting Mechanism Clutch
2- T227	Spring Pin
3- S128	Mechanism Retainer
4- C65	Screw

www.andacotomotiv.com

All original numbers, marks and models from vehicle manufacturers listed in this catalogue are for comparison purposes only, and may not be used in invoices.

MERITOR

ANDTECH No :	0810 20414
Org. Ref. No :	
Application :	ELSA 1
Description :	Caliper Adjusting Mechanism (Left)
1- T495	Adjusting Mechanism Clutch
2- T227	Spring Pin
3- S128	Mechanism Retainer
4- C65	Screw

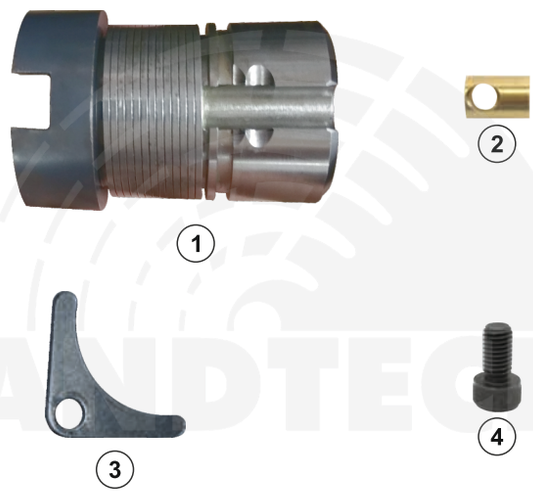

ANDTECH No :	0810 20415
Org. Ref. No :	
Application :	ELSA 1
Description :	Caliper Adjusting Gear Kit
1- T496	Adjusting Gear
2- Y49	Spring

ANDTECH No :	0810 20416
Org. Ref. No :	MCK1211
Application :	ELSA 1
Description :	Caliper Adjusting Mechanism Repair Kit (Right)
1- T494	Adjusting Mechanism Clutch
2- T227	Spring Pin
3- T496	Adjusting Gear
4- Y49	Spring
5- S128	Mechanism Retainer
6- C65	Screw

www.andacotomotiv.com

MERITOR

ANDTECH No :	0810 20417
Org. Ref. No :	MCK1212
Application :	ELSA 1
Description :	Caliper Adjusting Mechanism Repair Kit (Left)
1- T495	Adjusting Mechanism Clutch
2- T227	Spring Pin
3- T496	Adjusting Gear
4- Y49	Spring
5- S128	Mechanism Retainer
6- C65	Screw

ANDTECH No :	0810 20179
Org. Ref. No :	
Application :	ELSA 1
Description :	Caliper Adjusting Gear Sheet (35mm)
1- T151	Adjusting Gear Sheet

ANDTECH No :	0810 20180
Org. Ref. No :	
Application :	ELSA 1
Description :	Caliper Adjusting Gear Sheet (37.5mm)
1- T226	Adjusting Gear Sheet

www.andacotomotiv.com

All original numbers, marks and models from vehicle manufacturers listed in this catalogue are for comparison purposes only, and may not be used in invoices.

MERITOR

ANDTECH No :	0810 20181
Org. Ref. No :	
Application :	ELSA 1
Description :	Caliper Metal Cap
1- T152	Metal Cap

ANDTECH No :	0810 20182
Org. Ref. No :	
Application :	ELSA 1
Description :	Caliper Spring Retainer Kit (Right)
1- Y1	Spring
2- S77	Spring Retainer
3- S78	Pin Retainer
4- T227	Spring Pin
5- C65	Screw

ANDTECH No :	0810 20183
Org. Ref. No :	
Application :	ELSA 1
Description :	Caliper Spring (Right)
1- Y1	Spring

www.andacotomotiv.com

MERITOR

ANDTECH No :	0810 20184
Org. Ref. No :	
Application :	ELSA 1
Description :	Caliper Spring Retainer Kit (Left)
1- Y2	Spring
2- S77	Spring Retainer
3- S78	Pin Retainer
4- T227	Spring Pin
5- C65	Screw

ANDTECH No :	0810 20185
Org. Ref. No :	
Application :	ELSA 1
Description :	Caliper Spring (Left)
1- Y2	Spring

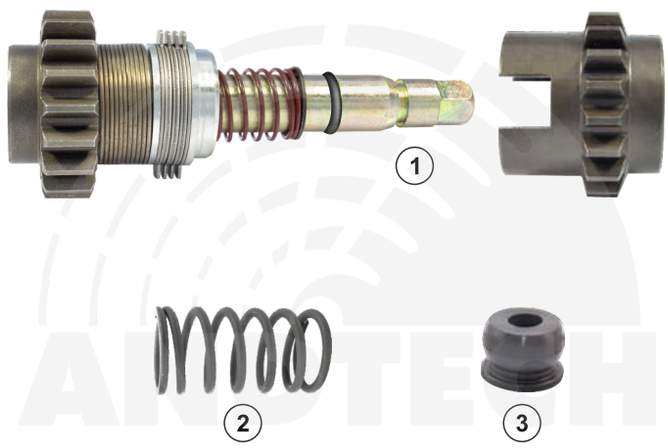

ANDTECH No :	0810 20186
Org. Ref. No :	SJ4113 - 3092763
Application :	C LISA - D LISA
Description :	Caliper Adjusting Mechanism (Left)
1- T76	Adjusting Mechanism
2- Y16	Spring
3- K71	Boot

www.andacotomotiv.com

All original numbers, marks and models from vehicle manufacturers listed in this catalogue are for comparison purposes only, and may not be used in invoices.

MERITOR

ANDTECH No :	0810 20187
Org. Ref. No :	SJ4114 - 3092764
Application :	C LISA - D LISA
Description :	Caliper Adjusting Mechanism (Right)
1- T75	Adjusting Mechanism
2- Y16	Spring
3- K71	Boot

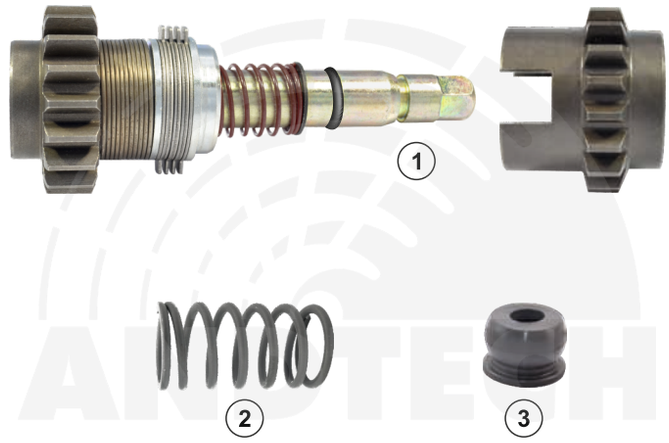

ANDTECH No :	0810 20188
Org. Ref. No :	MCK1151 - MCK1021 - 85104827
Application :	C LISA - D LISA
Description :	Caliper Adjusting Gear Kit (Left)
1- T148	Adjusting Shaft
2- T145	Housing
3- R3	Ball Bearing
4- T147	Pin
5- HR1	Grease Nipple

ANDTECH No :	0810 20189
Org. Ref. No :	MCK1152 - MCK1022 - 85104828
Application :	C LISA - D LISA
Description :	Caliper Adjusting Gear Kit (Right)
1- T144	Adjusting Shaft
2- T149	Housing
3- R3	Ball Bearing
4- T147	Pin
5- HR1	Grease Nipple

www.andacotomotiv.com

MERITOR

ANDTECH No :	0810 20190
Org. Ref. No :	
Application :	C LISA - D LISA
Description :	Caliper Adjusting Shaft (Right)
1- T144	Adjusting Shaft
2- HR1	Grease Nipple

ANDTECH No :	0810 20191
Org. Ref. No :	
Application :	C LISA - D LISA
Description :	Caliper Adjusting Shaft (Left)
1- T148	Adjusting Shaft
2- HR1	Grease Nipple

ANDTECH No :	0810 20192
Org. Ref. No :	
Application :	C LISA - D LISA
Description :	Caliper Housing (Left)
1- T145	Housing

www.andacotomotiv.com

All original numbers, marks and models from vehicle manufacturers listed in this catalogue are for comparison purposes only, and may not be used in invoices.

MERITOR

ANDTECH No :	0810 20193
Org. Ref. No :	
Application :	C LISA - D LISA
Description :	Caliper Housing (Right)
1- T149	Housing

ANDTECH No :	0810 20194
Org. Ref. No :	SJ4031 - 8550893 - 69029760 - 6553778 - 6553779
Application :	C LISA - D LISA
Description :	Caliper Bearing Kit
1- R1	Bearing
2- B33	Bush
3- T150	Metal Sheet
4- R2	Bearing
5- S183	Ring

ANDTECH No :	0810 20195
Org. Ref. No :	
Application :	C LISA - D LISA
Description :	Caliper Bearing Kit
1- R1	Bearing
2- B33	Bush
3- T150	Metal Sheet
4- R2	Bearing
5- K74	Seal 40x57x4.5
6- K76	Seal

www.andacotomotiv.com

MERITOR

ANDTECH No :	0810 20196
Org. Ref. No :	
Application :	C LISA - D LISA
Description :	Caliper Ball Bearing
1- R3	Ball Bearing

ANDTECH No :	0810 20197
Org. Ref. No :	
Application :	C LISA - D LISA
Description :	Caliper Gear Small (Right)
1- T73	Adjusting Gear

ANDTECH No :	0810 20198
Org. Ref. No :	
Application :	C LISA - D LISA
Description :	Caliper Gear Small (Left)
1- T74	Adjusting Gear

www.andacotomotiv.com

All original numbers, marks and models from vehicle manufacturers listed in this catalogue are for comparison purposes only, and may not be used in invoices.

MERITOR

ANDTECH No :	0810 20199
Org. Ref. No :	SJ4074 - 3098111
Application :	C LISA - D LISA
Description :	Caliper Gear Small (Right)
1- T73	Adjusting Gear
2- Y22	Spring

ANDTECH No :	0810 20200
Org. Ref. No :	SJ4073 - 3098110
Application :	C LISA - D LISA
Description :	Caliper Gear Small (Left)
1- T74	Adjusting Gear
2- Y22	Spring

ANDTECH No :	0810 20201
Org. Ref. No :	
Application :	MB, MAN, RVI, D3
Description :	Caliper Gear Big (Right)
1- T45	Adjusting Gear

www.andacotomotiv.com

All original numbers, marks and models from vehicle manufacturers listed in this catalogue are for comparison purposes only, and may not be used in invoices.

MERITOR

ANDTECH No :	0810 20202
Org. Ref. No :	
Application :	MB, MAN, RVI, D3
Description :	Caliper Gear Big (Left)
1- T44	Adjusting Gear

ANDTECH No :	0810 20203
Org. Ref. No :	
Application :	MB, MAN, RVI, D3
Description :	Caliper Shaft Short (Right)
1- T155	Shaft Short (26 Thread)

ANDTECH No :	0810 20204
Org. Ref. No :	
Application :	MB, MAN, RVI, D3
Description :	Caliper Shaft Short (Left)
1- T156	Shaft Short (26 Thread)

www.andacotomotiv.com

All original numbers, marks and models from vehicle manufacturers listed in this catalogue are for comparison purposes only, and may not be used in invoices.

MERITOR

ANDTECH No :	0810 20205
Org. Ref. No :	
Application :	MB, MAN, RVI, D3
Description :	Caliper Shaft Short (Right)
1- T157	Shaft Short (48 Thread)

ANDTECH No :	0810 20206
Org. Ref. No :	
Application :	MB, MAN, RVI, D3
Description :	Caliper Shaft Short (Left)
1- T158	Shaft Short (48 Thread)

ANDTECH No :	0810 20207
Org. Ref. No :	
Application :	MB, MAN, RVI, D3
Description :	Caliper Shaft Long (Right)
1- T159	Shaft Long (26 Thread)

www.andacotomotiv.com

MERITOR

ANDTECH No :	0810 20208
Org. Ref. No :	
Application :	MB, MAN, RVI, D3
Description :	Caliper Shaft Long (Left)
1- T160	Shaft Long (26 Thread)

ANDTECH No :	0810 20209
Org. Ref. No :	
Application :	MB, MAN, RVI, D3
Description :	Caliper Housing (Left)
1- T161	Housing

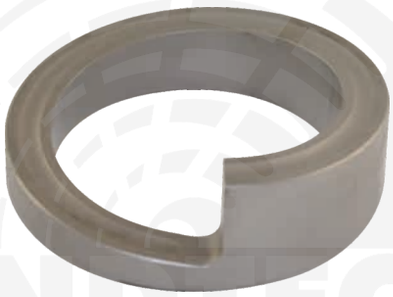

ANDTECH No :	0810 20210
Org. Ref. No :	
Application :	MB, MAN, RVI, D3
Description :	Caliper Housing (Right)
1- T162	Housing

www.andacotomotiv.com

All original numbers, marks and models from vehicle manufacturers listed in this catalogue are for comparison purposes only, and may not be used in invoices.

MERITOR

ANDTECH No :	0810 20303
Org. Ref. No :	
Application :	ELSA 2, ELSA 195, ELSA 225, EX 225
Description :	Caliper Roller Bearing Kit
1- T69	Bearing Cap
2- R12	Roller Bearing

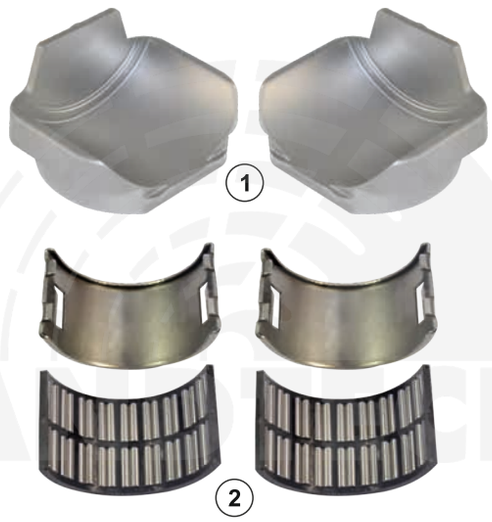

ANDTECH No :	0810 20211
Org. Ref. No :	
Application :	ELSA 2, ELSA 195, ELSA 225, EX 225
Description :	Caliper Bearing Cap
1- T69	Bearing Cap

ANDTECH No :	0810 20212
Org. Ref. No :	
Application :	ELSA 1, ELSA 2, ELSA 195, ELSA 225, EX 225
Description :	Caliper Roller Bearing
1- R12	Roller Bearing

www.andacotomotiv.com

MERITOR

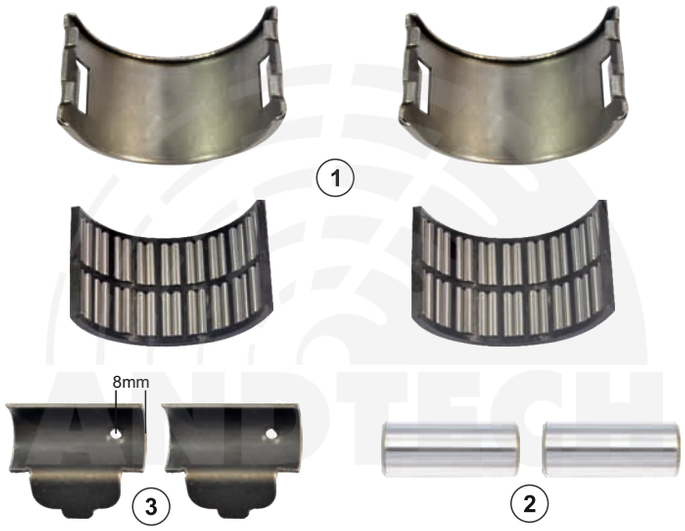

ANDTECH No :	0810 20213
Org. Ref. No :	SJ4098 - 3092261
Application :	D DUCO RADIAL, C DUCO, LE DUCO
Description :	Caliper Roller Bearing Kit
1- R12	Roller Bearing
2- T128	Pin
3- S29	Lever Bearing

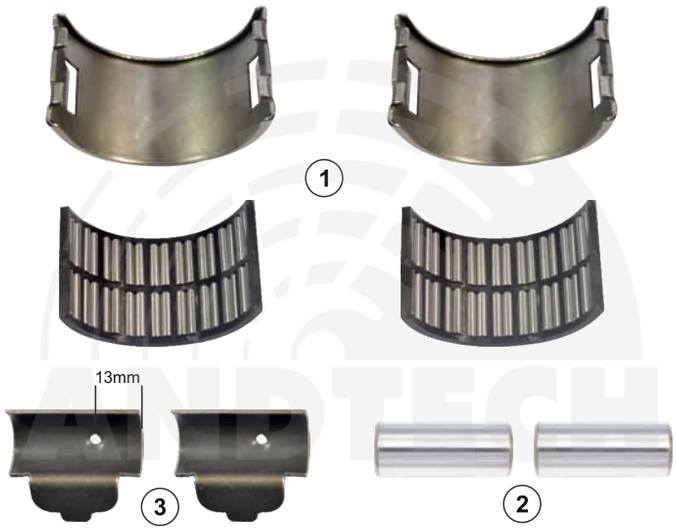

ANDTECH No :	0810 20214
Org. Ref. No :	SJ4112 - 3092329
Application :	D DUCO AXIAL, ELSA, EX 225
Description :	Caliper Roller Bearing Kit
1- R12	Roller Bearing
2- T128	Pin
3- S25	Lever Bearing

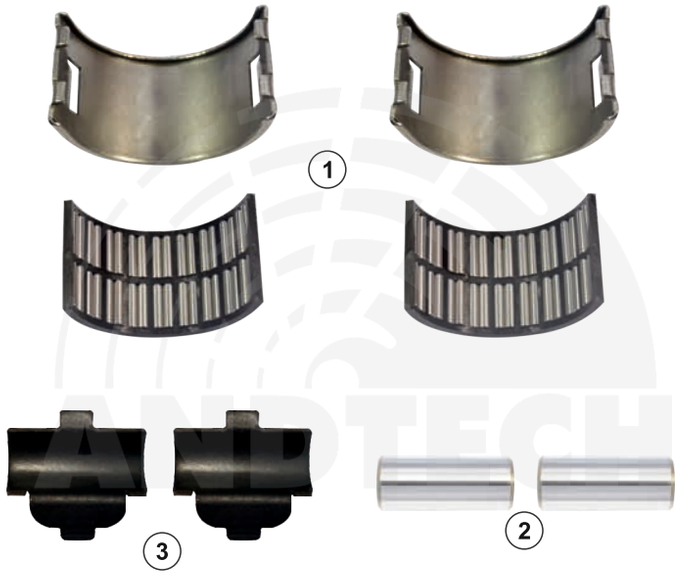

ANDTECH No :	0810 20469
Org. Ref. No :	
Application :	ELSA 2
Description :	Caliper Repair Kit
1- R12	Roller Bearing
2- T128	Pin
3- S167	Lever Bearing

www.andacotomotiv.com

All original numbers, marks and models from vehicle manufacturers listed in this catalogue are for comparison purposes only, and may not be used in invoices.

MERITOR

ANDTECH No :	0810 20215
Org. Ref. No :	
Application :	ELSA 2
Description :	Caliper Lever (Left - Right)
1- T70	Lever
2- S25	Lever Bearing
3- T128	Pin

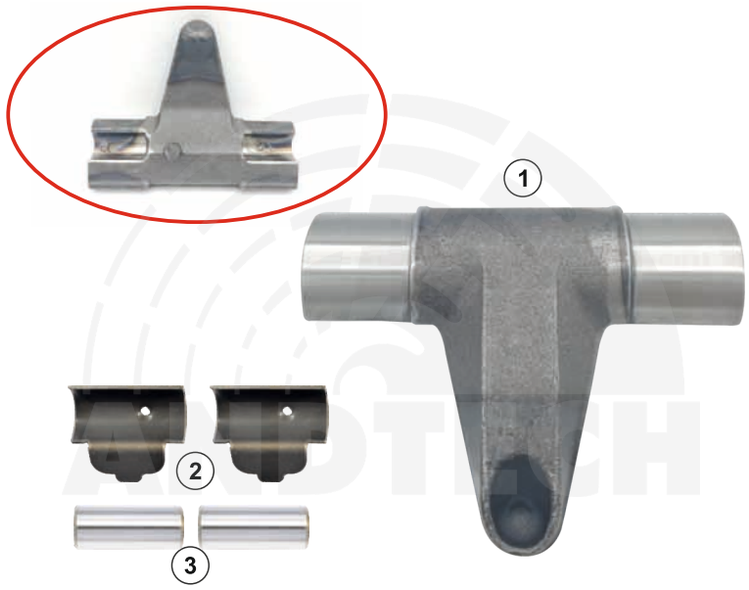

ANDTECH No :	0810 20216
Org. Ref. No :	
Application :	ELSA 195 - ELSA 225
Description :	Caliper Lever (Left - Right)
1- T228	Lever
2- S25	Lever Bearing
3- T128	Pin

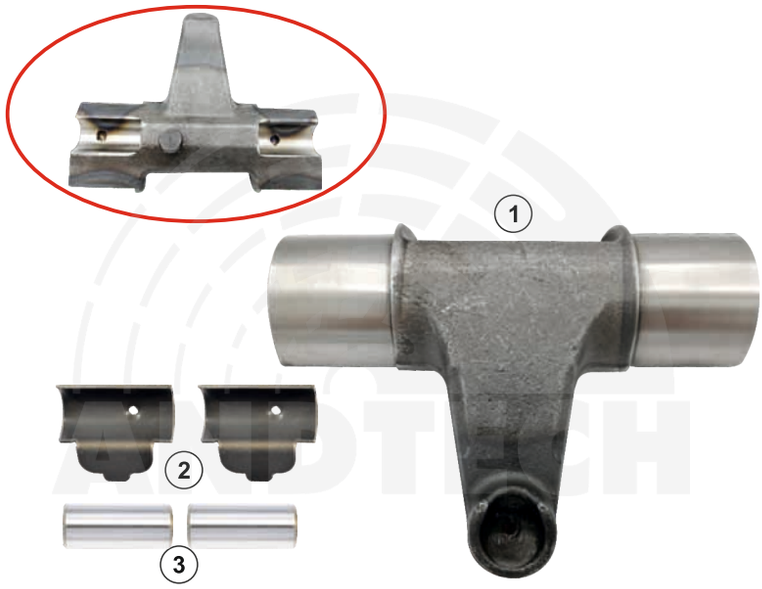

ANDTECH No :	0810 20217
Org. Ref. No :	
Application :	EX 225
Description :	Caliper Lever (Left - Right)
1- T229	Lever
2- S25	Lever Bearing
3- T128	Pin

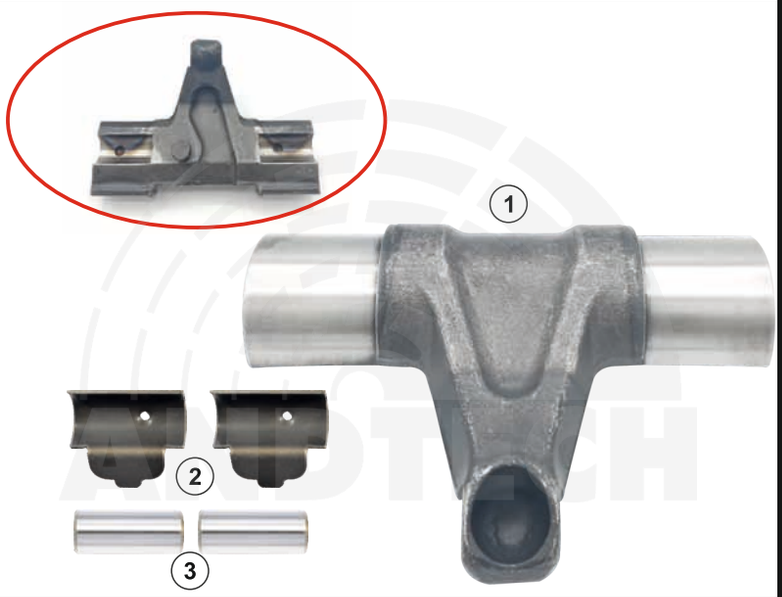

www.andacotomotiv.com

All original numbers, marks and models from vehicle manufacturers listed in this catalogue are for comparison purposes only, and may not be used in invoices.

MERITOR

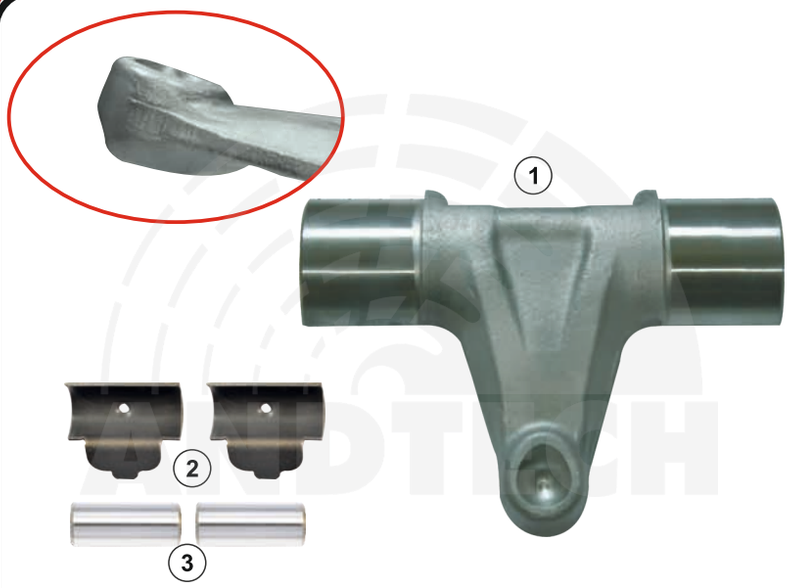

ANDTECH No :	0810 20297
Org. Ref. No :	
Application :	EX 225
Description :	Caliper Lever (Left - Right)
1- T194	Lever
2- S230	Lever Bearing
3- T128	Pin

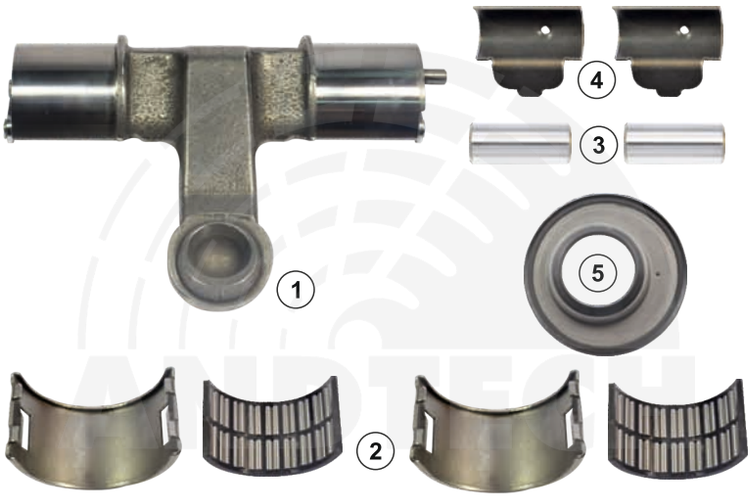

ANDTECH No :	0810 20218
Org. Ref. No :	SJ4096 - MCK1398 - 85109975 3092258 - 21109753
Application :	D DUCO AXIAL
Description :	Caliper Lever Repair Kit (Left)
1- T230	Lever
2- R12	Roller Bearing
3- T128	Pin
4- S25	Lever Bearing
5- K30	Eccentric Seal

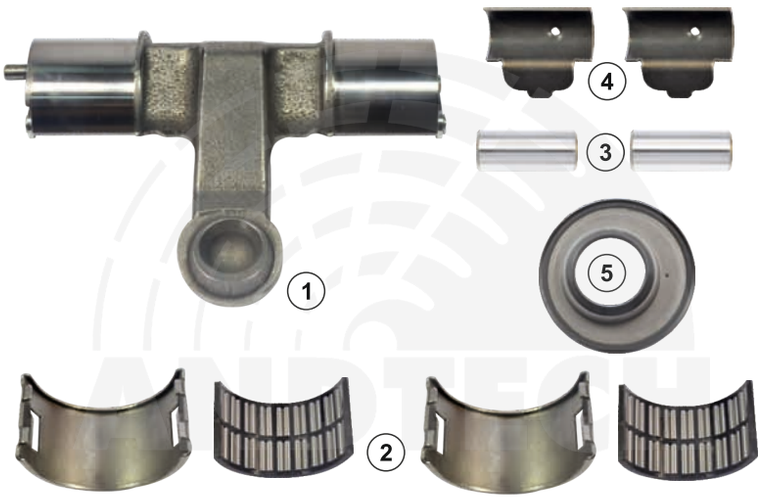

ANDTECH No :	0810 20219
Org. Ref. No :	SJ4097 - MCK1399 - 85109976 3092259 - 21109754
Application :	D DUCO AXIAL
Description :	Caliper Lever Repair Kit (Right)
1- T231	Lever
2- R12	Roller Bearing
3- T128	Pin
4- S25	Lever Bearing
5- K30	Eccentric Seal

www.andacotomotiv.com

All original numbers, marks and models from vehicle manufacturers listed in this catalogue are for comparison purposes only, and may not be used in invoices.

MERITOR

ANDTECH No :	0810 20220
Org. Ref. No :	
Application :	D DUCO AXIAL
Description :	Caliper Lever (Left)
1- T230	Lever
2- S25	Lever Bearing
3- T128	Pin

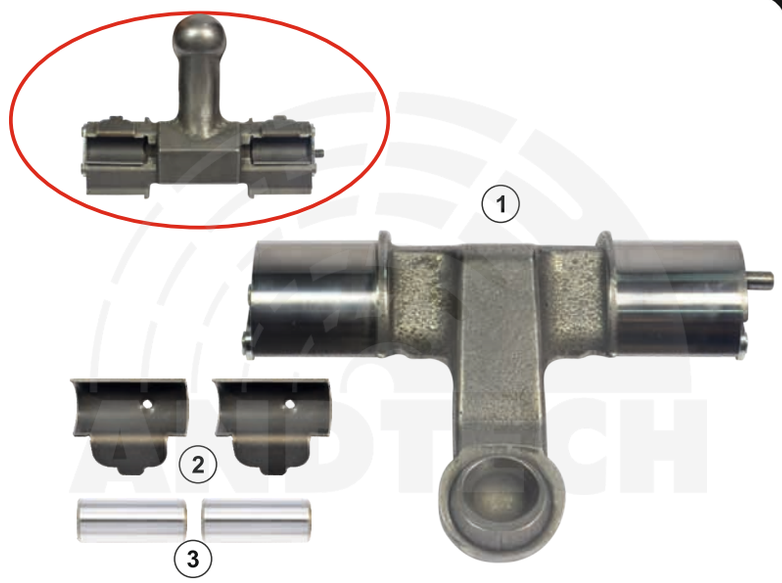

ANDTECH No :	0810 20221
Org. Ref. No :	
Application :	D DUCO AXIAL
Description :	Caliper Lever (Right)
1- T231	Lever
2- S25	Lever Bearing
3- T128	Pin

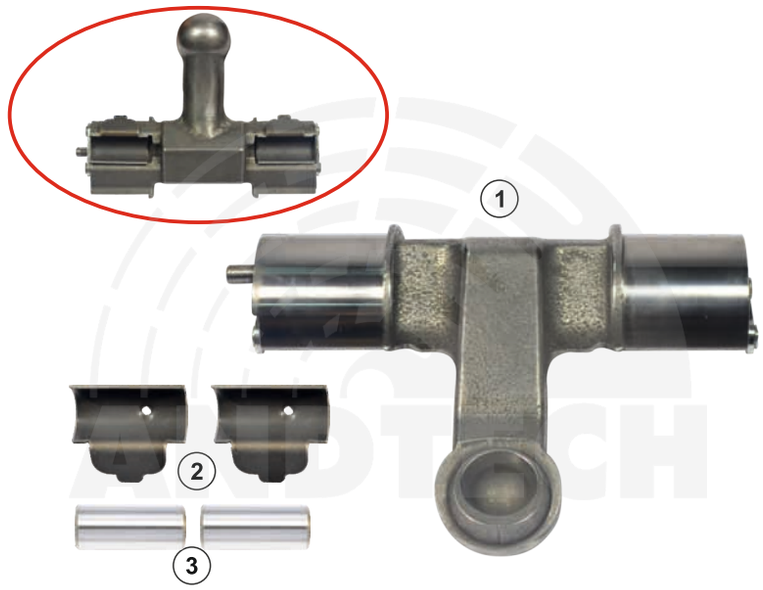

ANDTECH No :	0810 20222
Org. Ref. No :	
Application :	ELSA 1
Description :	Caliper Lever (Left)
1- T232	Lever
2- S25	Lever Bearing
3- T128	Pin

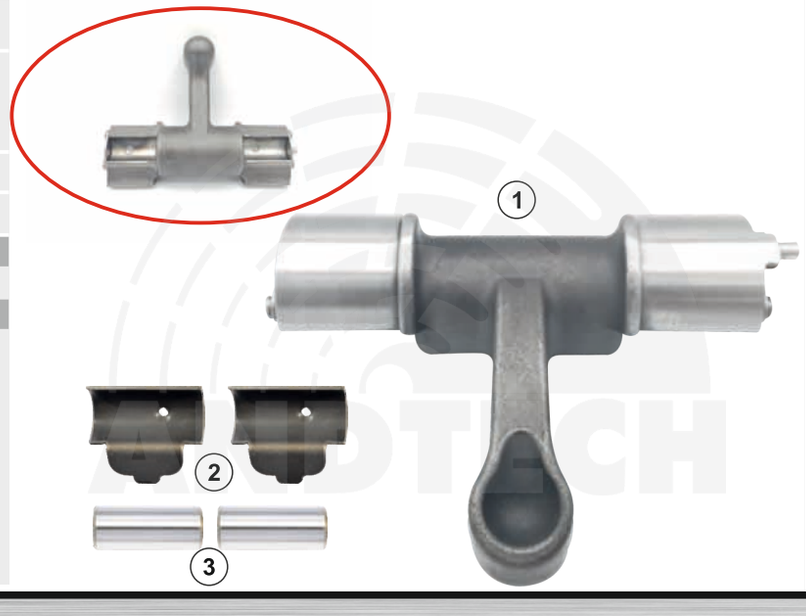

www.andacotomotiv.com

All original numbers, marks and models from vehicle manufacturers listed in this catalogue are for comparison purposes only, and may not be used in invoices.

MERITOR

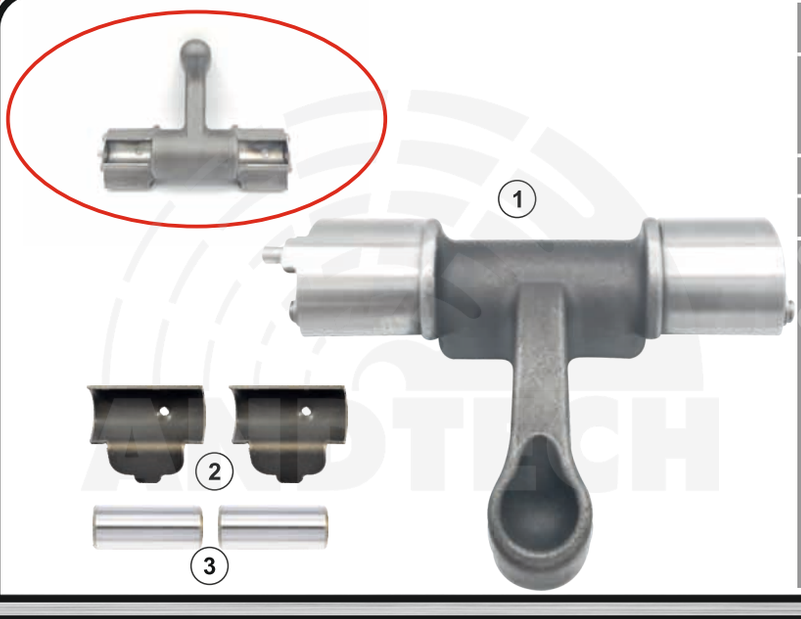

ANDTECH No :	0810 20223
Org. Ref. No :	
Application :	ELSA 1
Description :	Caliper Lever (Right)
1- T233	Lever
2- S25	Lever Bearing
3- T128	Pin

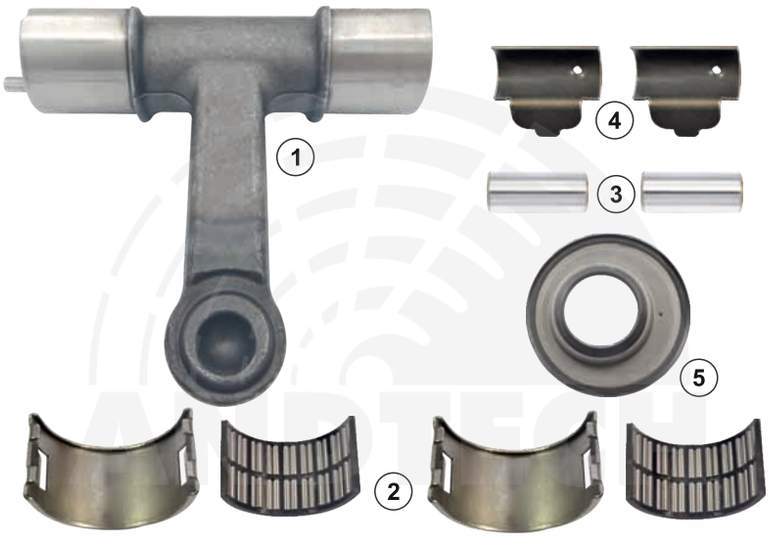

ANDTECH No :	0810 20224
Org. Ref. No :	SJ4108 - 21109755 3092260 - 85109977
Application :	D DUCO RADIAL
Description :	Caliper Lever Repair Kit (Left - Right)
1- T234	Lever
2- R12	Roller Bearing
3- T128	Pin
4- S29	Lever Bearing
5- K30	Eccentric Seal

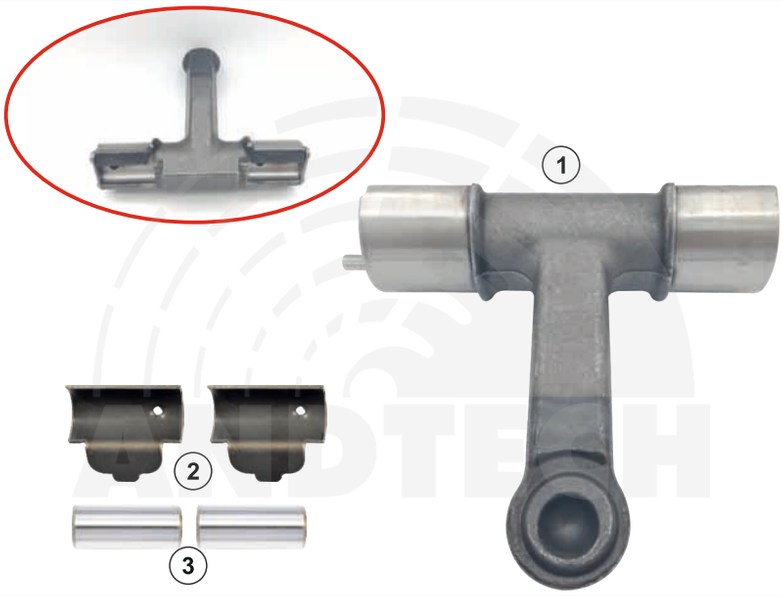

ANDTECH No :	0810 20225
Org. Ref. No :	
Application :	D DUCO RADIAL
Description :	Caliper Lever (Left - Right)
1- T234	Lever
2- S29	Lever Bearing
3- T128	Pin

www.andacotomotiv.com

All original numbers, marks and models from vehicle manufacturers listed in this catalogue are for comparison purposes only, and may not be used in invoices.

MERITOR

ANDTECH No :	0810 20226
Org. Ref. No :	SJ4018
Application :	ELSA 2 RADIAL
Description :	Caliper Lever Repair Kit (Left - Right)
1- T235	Lever
2- R12	Roller Bearing
3- T128	Pin
4- S29	Lever Bearing
5- K30	Eccentric Seal

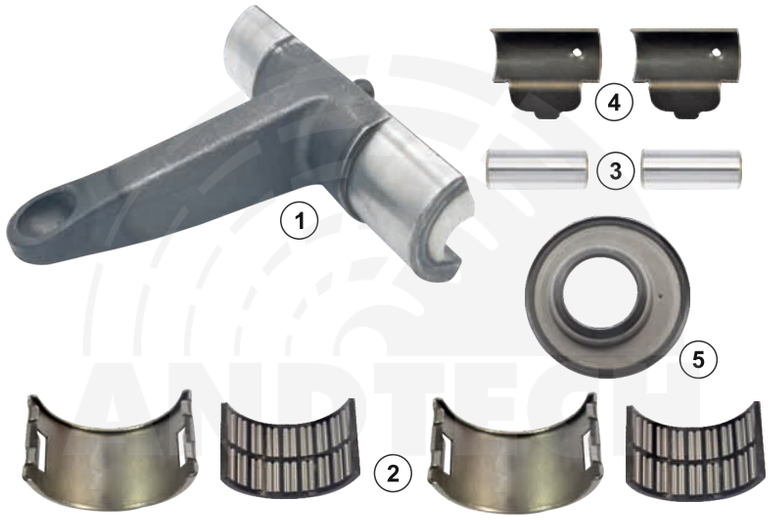

ANDTECH No :	0810 20227
Org. Ref. No :	
Application :	ELSA 2 RADIAL
Description :	Caliper Lever (Left - Right)
1- T235	Lever
2- S29	Lever Bearing
3- T128	Pin

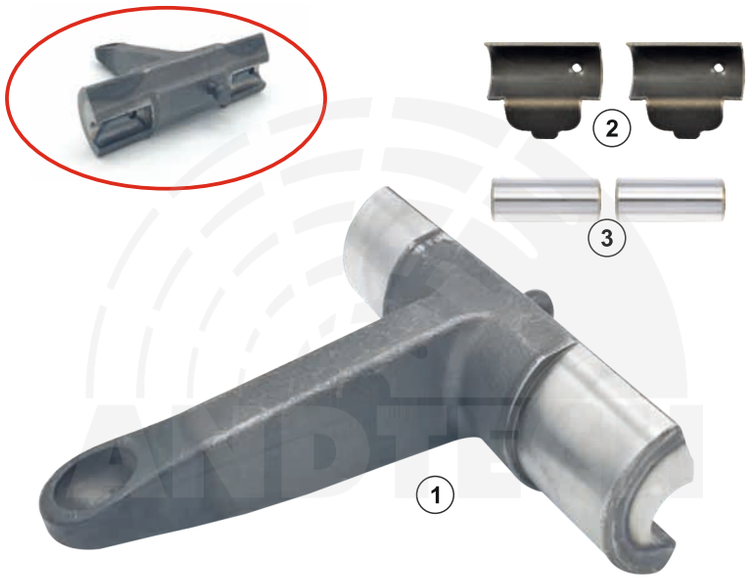

ANDTECH No :	0810 20381
Org. Ref. No :	
Application :	ELSA 195, ELSA 225
Description :	Caliper Lever (Left - Right)
1- T341	Lever
2- S167	Lever Bearing
3- T128	Pin

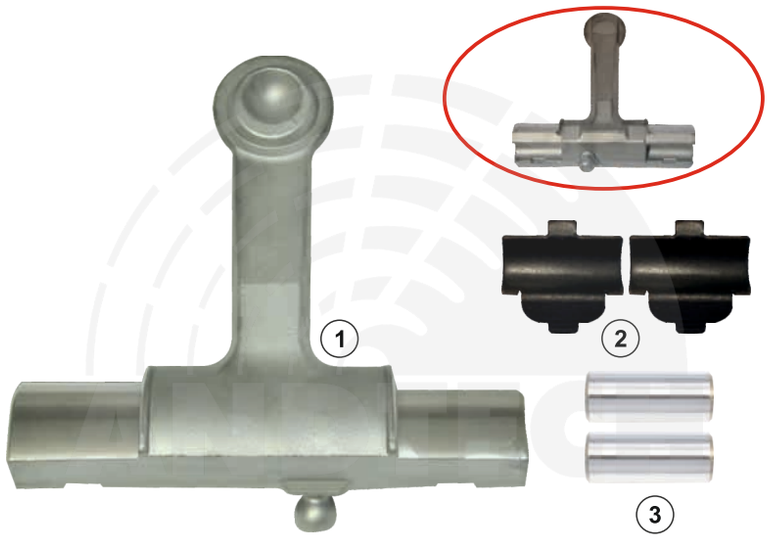

www.andacotomotiv.com

All original numbers, marks and models from vehicle manufacturers listed in this catalogue are for comparison purposes only, and may not be used in invoices.

MERITOR

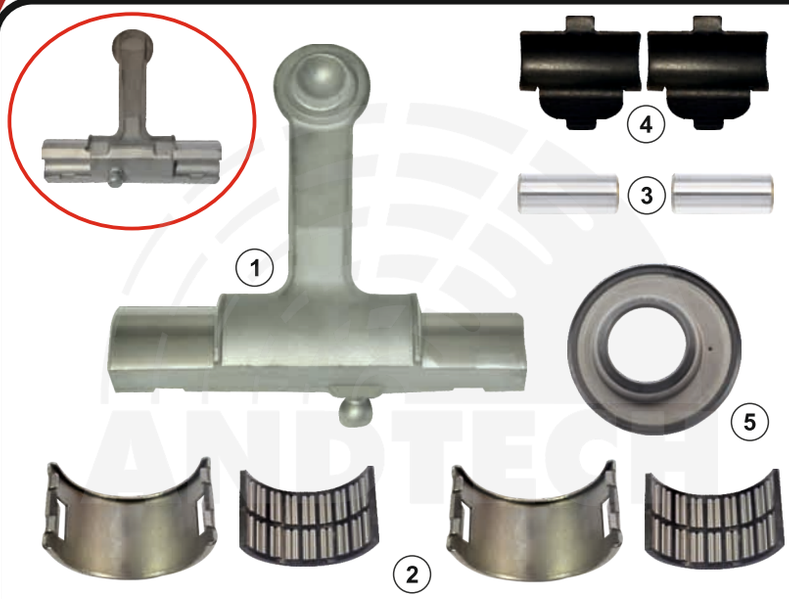

ANDTECH No :	0810 20396
Org. Ref. No :	
Application :	ELSA 195, ELSA 225
Description :	Caliper Lever Repair Kit (Left - Right)
1- T341	Lever
2- R12	Roller Bearing
3- T128	Pin
4- S167	Lever Bearing
5- K30	Eccentric Seal

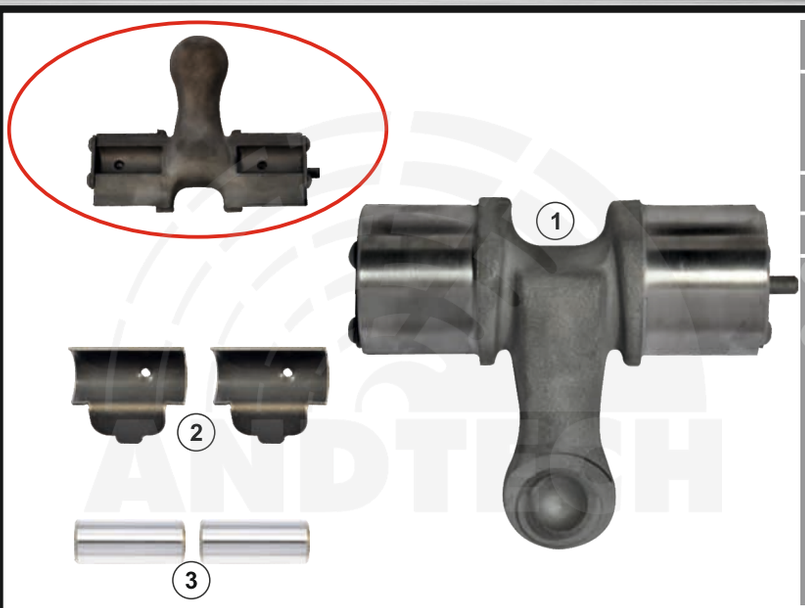

ANDTECH No :	0810 20400
Org. Ref. No :	
Application :	C DUCO, LE DUCO
Description :	Caliper Lever (Left)
1- T372	Lever
2- S25	Lever Bearing
3- T128	Pin

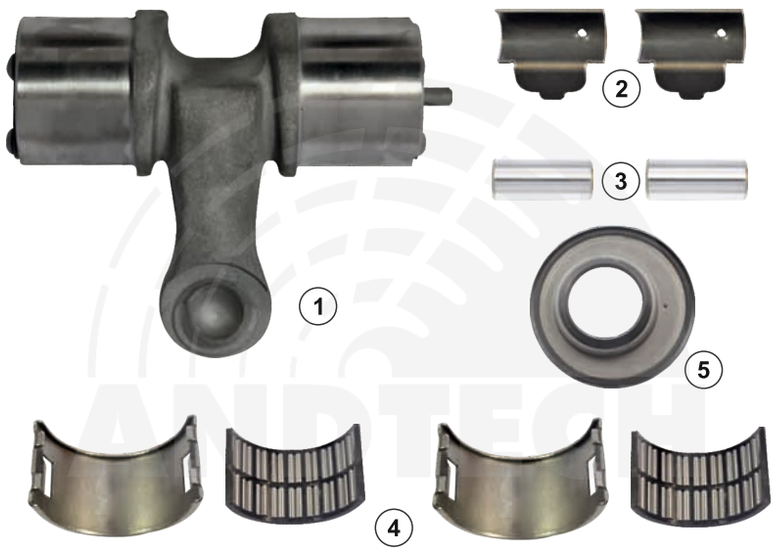

ANDTECH No :	0810 20401
Org. Ref. No :	MCK1127 - 85102097
Application :	C DUCO, LE DUCO
Description :	Caliper Lever Repair Kit (Left)
1- T372	Lever
2- S25	Lever Bearing
3- T128	Pin
4- R12	Roller Bearing
5- K30	Eccentric Seal

www.andacotomotiv.com

All original numbers, marks and models from vehicle manufacturers listed in this catalogue are for comparison purposes only, and may not be used in invoices.

MERITOR

ANDTECH No :	0810 20410
Org. Ref. No :	
Application :	C DUCO, LE DUCO
Description :	Caliper Lever (Right)
1- T388	Lever
2- S25	Lever Bearing
3- T128	Pin

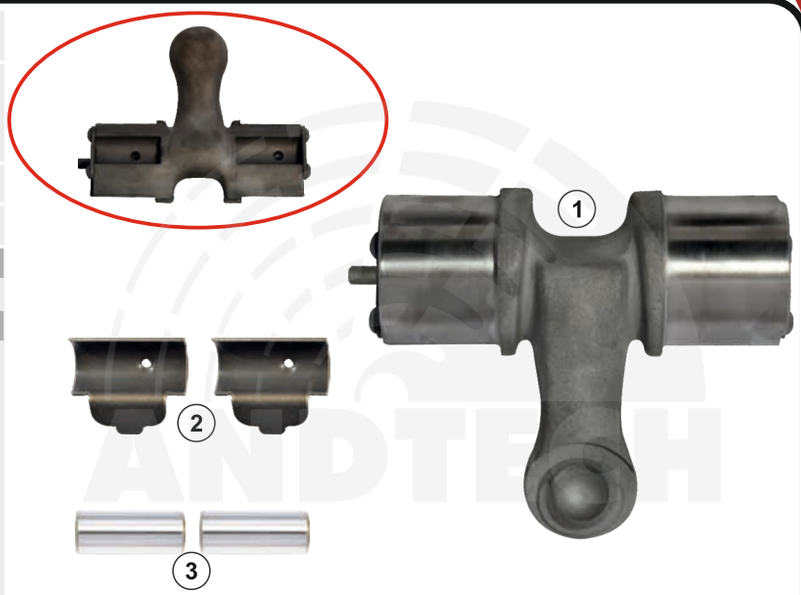

ANDTECH No :	0810 20411
Org. Ref. No :	MCK1128 - 85102098
Application :	C DUCO, LE DUCO
Description :	Caliper Lever Repair Kit (Right)
1- T388	Lever
2- S25	Lever Bearing
3- T128	Pin
4- R12	Roller Bearing
5- K30	Eccentric Seal

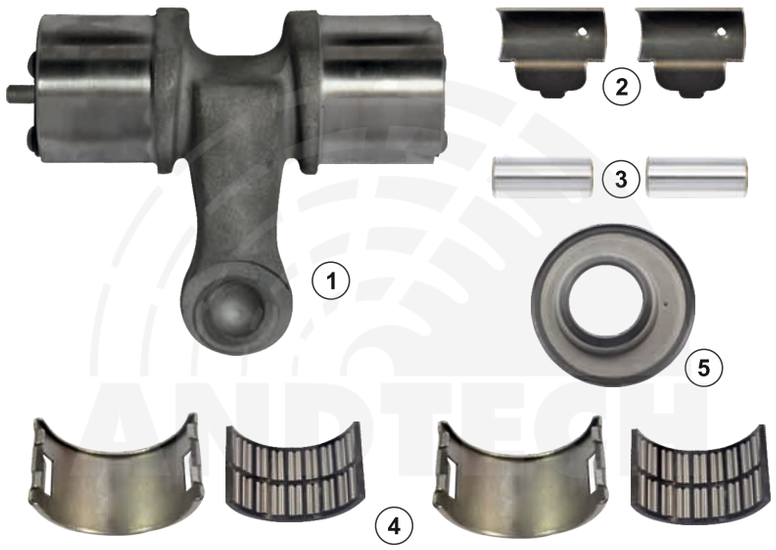

ANDTECH No :	0810 20399
Org. Ref. No :	
Application :	DUCO
Description :	Caliper Lever
1- T371	Lever
2- C69	Screw M10x1,50x50mm
3- C70	Bolt Nut M10

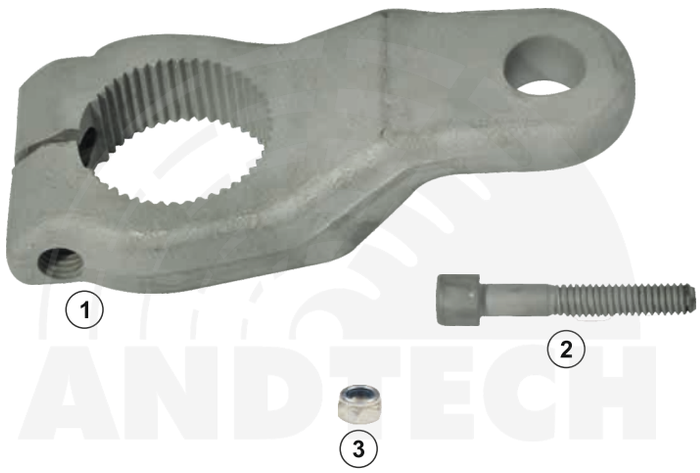

www.andacotomotiv.com

MERITOR

ANDTECH No :	0810 20228
Org. Ref. No :	SJ4077 - 3098109
Application :	LISA
Description :	Caliper Boot Kit
1- K24	Boot
2- K73	Boot

ANDTECH No :	0810 20374
Org. Ref. No :	
Application :	LISA
Description :	Caliper Boot
1- K73	Boot

ANDTECH No :	0810 20341
Org. Ref. No :	SJ4053
Application :	ELSA 2, ELSA 195, ELSA 225, EX 225
Description :	Caliper Boot
1- K24	Boot

ANDTECH No :	0810 20365
Org. Ref. No :	68324854PK10
Application :	ELSA 2, ELSA 195, ELSA 225, EX 225
Description :	Caliper Dust Cover
1- K23	Dust Cover

ANDTECH No :	0810 20229
Org. Ref. No :	MCK1139 - 85107913 - 81508026024
Application :	ELSA 2, ELSA 195, ELSA 225, EX 225
Description :	Caliper Dust Cover
1- K23	Dust Cover

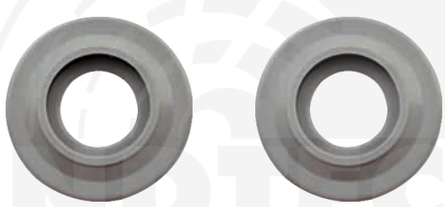

ANDTECH No :	0810 20230
Org. Ref. No :	ST1156 - 81508026016
Application :	ELSA 1
Description :	Caliper Dust Cover
1- K33	Dust Cover

www.andacotomotiv.com

All original numbers, marks and models from vehicle manufacturers listed in this catalogue are for comparison purposes only, and may not be used in invoices.

MERITOR

ANDTECH No :	0810 20231
Org. Ref. No :	MCK1238 - 3092264
Application :	B DUCO - C DUCO - D DUCO - LE DUCO
Description :	Caliper Repair Kit
1- K23	Dust Cover
2- T36	Tappet
3- SK1	Snap Ring

ANDTECH No :	0810 20232
Org. Ref. No :	MCK1309 - 5001866398
Application :	ELSA 2 - ELSA 195 - ELSA 225, EX 225
Description :	Caliper Repair Kit
1- T154	Tappet
2- S40	Piston Ring
3- K23	Dust Cover

ANDTECH No :	0810 20233
Org. Ref. No :	
Application :	ELSA 2, ELSA 195, ELSA 225, EX 225
Description :	Caliper Tappet Repair Kit
1- T154	Tappet
2- S40	Piston Ring

www.andacotomotiv.com

All original numbers, marks and models from vehicle manufacturers listed in this catalogue are for comparison purposes only, and may not be used in invoices.

MERITOR

ANDTECH No :	0810 20356
Org. Ref. No :	
Application :	B DUCO - C DUCO - D DUCO - LE DUCO
Description :	Caliper Tappet Repair Kit
1- T36	Tappet
2- SK1	Snap Ring

ANDTECH No :	0810 20234
Org. Ref. No :	MCK1118 - 85102092
Application :	D DUCO
Description :	Caliper Repair Kit (Front)
1- T34	Guide Pin Ø35x102mm
2- C9	Screw M20x2x125mm
3- P4	Bush (Plastic)
4- K24	Boot
5- S11	Ring
6- S3	Metal Tap (40x17mm)
7- B4	Bush

ANDTECH No :	0810 20235
Org. Ref. No :	MCK1116 - 85102094
Application :	B DUCO, C DUCO, D DUCO, LE DUCO
Description :	Caliper Repair Kit (Rear)
1- T34	Guide Pin Ø35x102mm
2- C9	Screw M20x2x125mm
3- T35	Guide Pin Ø35x60mm
4- C11	Screw M20x2x80mm
5- K24	Boot
6- S11	Ring
7- S3	Metal Tap (40x17mm)
8- P4	Bush (Plastic)
9- B4	Bush

www.andacotomotiv.com

All original numbers, marks and models from vehicle manufacturers listed in this catalogue are for comparison purposes only, and may not be used in invoices.

MERITOR

ANDTECH No :	0810 20236
Org. Ref. No :	MCK1135 - 85103891
Application :	D DUCO
Description :	Caliper Repair Kit
1- T34	Guide Pin Ø35x102mm
2- C9	Screw M20x2x125mm
3- P22	Bush (Plastic)
4- K24	Boot
5- S3	Metal Tap (40x17mm)
6- S11	Ring
7- B4	Bush

ANDTECH No :	0810 20237
Org. Ref. No :	MCK1134 - 85103892
Application :	B DUCO, C DUCO, D DUCO
Description :	Caliper Repair Kit
1- T34	Guide Pin Ø35x102mm
2- C9	Screw M20x2x125mm
3- T35	Guide Pin Ø35x60mm
4- C11	Screw M20x2x80mm
5- P22	Bush (Plastic)
6- K24	Boot
7- S3	Metal Tap (40x17mm)
8- S11	Ring
9- B4	Bush

ANDTECH No :	0810 20238
Org. Ref. No :	MCK1298 - 85109890 - 5001866989
Application :	ELSA 195, ELSA 225, EX 225
Description :	Caliper Repair Kit
1- T175	Guide Pin Ø35x117mm
2- C32	Screw M18x1,5x120mm
3- T174	Guide Pin Ø31x78mm
4- C33	Screw M18x1,5x82mm
5- K24	Boot
6- S11	Ring
7- S26	Metal Tap (44x26mm)
8- B8	Bush
9- B3	Bush
10- C14	Screw M16x1,5x40mm
11- C49	Screw M14x1,5x40mm

www.andacotomotiv.com

All original numbers, marks and models from vehicle manufacturers listed in this catalogue are for comparison purposes only, and may not be used in invoices.

MERITOR

ANDTECH No :	0810 20239
Org. Ref. No :	MCK1254
Application :	ELSA 195, ELSA 225
Description :	Caliper Repair Kit
1- T175	Guide Pin Ø35x117mm
2- C32	Screw M18x1,5x120mm
3- T174	Guide Pin Ø31x78mm
4- C33	Screw M18x1,5x82mm
5- K24	Boot
6- S11	Ring
7- S26	Metal Tap (44x26mm)
8- B8	Bush
9- B3	Bush
10- C14	Screw M16x1,5x40mm

ANDTECH No :	0810 20305
Org. Ref. No :	MCK1323
Application :	ELSA 195, ELSA 225, EX 225
Description :	Caliper Repair Kit
1- T175	Guide Pin Ø35x117mm
2- C32	Screw M18x1,5x120mm
3- T174	Guide Pin Ø31x78mm
4- C33	Screw M18x1,5x82mm
5- K24	Boot
6- S11	Ring
7- S26	Metal Tap (44x26mm)
8- B8	Bush
9- B3	Bush
10- C49	Screw M14x1,5x40mm

ANDTECH No :	0810 20240
Org. Ref. No :	
Application :	ELSA 195, ELSA 225, EX 225
Description :	Caliper Repair Kit
1- T175	Guide Pin Ø35x117mm
2- C32	Screw M18x1,5x120mm
3- T174	Guide Pin Ø31x78mm
4- C33	Screw M18x1,5x82mm
5- K24	Boot
6- S11	Ring
7- S26	Metal Tap (44x26mm)
8- B8	Bush
9- B3	Bush

www.andacotomotiv.com

All original numbers, marks and models from vehicle manufacturers listed in this catalogue are for comparison purposes only, and may not be used in invoices.

MERITOR

ANDTECH No :	0810 20241
Org. Ref. No :	MCK1317 - 85109889 - 5001866385
Application :	ELSA 195, ELSA 225, EX 225
Description :	Caliper Repair Kit
1- T175	Guide Pin Ø35x117mm
2- C32	Screw M18x1,5x120mm
3- T197	Guide Pin Ø31x117mm
4- K24	Boot
5- S11	Ring
6- S26	Metal Tap (44x26mm)
7- B8	Bush
8- B3	Bush
9- C14	Screw M16x1,5x40mm

ANDTECH No :	0810 20242
Org. Ref. No :	SJ4052 - 5001845385
Application :	C LISA
Description :	Caliper Repair Kit
1- T189	Guide Pin Ø30x115mm
2- C41	Screw M18x1,5x135mm
3- T190	Guide Pin Ø30x75mm
4- C42	Screw M18x1,5x95mm
5- B31	Bush
6- S55	Metal Tap
7- K73	Boot
8- T191	Ring
9- P20	Bush
10- S56	Metal Tap (37x10mm)

ANDTECH No :	0810 20243
Org. Ref. No :	SJ4076 - MCK1104 5001837006 - 3098108
Application :	D LISA
Description :	Caliper Repair Kit
1- T71	Guide Pin Ø35x131mm
2- C5	Screw M20x1,5x150mm
3- T72	Guide Pin Ø35x79mm
4- C18	Screw M20x1,5x100mm
5- K24	Boot
6- S8	Metal Tap (45x10mm)
7- T170	Ring
8- B9	Bush
9- B3	Bush

www.andacotomotiv.com

All original numbers, marks and models from vehicle manufacturers listed in this catalogue are for comparison purposes only, and may not be used in invoices.

MERITOR

ANDTECH No :	0810 20323
Org. Ref. No :	
Application :	ELSA 1
Description :	Caliper Repair Kit
1- T46	Guide Pin 35x135mm
2- C5	Screw M20x1.5x150mm
3- T47	Guide Pin 35x72mm
4- C6	Screw M20x1.5x 90mm
5- B7	Bush
6- T126	Ring
7- K24	Boot
8- S6	Metal Tap (44x28mm)
9- T48	Ring
10- B3	Bush
11- K33	Dust Cover

ANDTECH No :	0810 20244
Org. Ref. No :	MCK1102 - 81508026017 - 81508026020 - 81508026021
Application :	ELSA 1
Description :	Caliper Repair Kit
1- T46	Guide Pin Ø35x135mm
2- C5	Screw M20x1,5x150mm
3- T47	Guide Pin Ø35x72mm
4- C6	Screw M20x1,5x 90mm
5- B7	Bush
6- T126	Ring
7- K24	Boot
8- S6	Metal Tap (44x28mm)
9- T48	Ring
10- B3	Bush

ANDTECH No :	0810 20324
Org. Ref. No :	
Application :	ELSA 1
Description :	Caliper Repair Kit
1- T46	Guide Pin Ø35x135mm
2- C5	Screw M20x1.5x150mm
3- T51	Guide Pin Ø28.5x110mm
4- K54	Rubber Bush
5- K24	Boot
6- S6	Metal Tap (44x28mm)
7- B3	Bush
8- T48	Ring
9- T61	Ring
10- K33	Dust Cover

www.andacotomotiv.com

All original numbers, marks and models from vehicle manufacturers listed in this catalogue are for comparison purposes only, and may not be used in invoices.

MERITOR

ANDTECH No :	0810 20245
Org. Ref. No :	MCK1103 - 81508026022
Application :	ELSA 1
Description :	Caliper Repair Kit
1- T46	Guide Pin Ø35x135mm
2- C5	Screw M20x1,5x150mm
3- T51	Guide Pin Ø28,5x110mm
4- K54	Rubber Bush
5- K24	Boot
6- S6	Metal Tap (44x28mm)
7- B3	Bush
8- T48	Ring
9- T61	Ring

ANDTECH No :	0810 20246
Org. Ref. No :	MCK1243 - MCK1140 - 5001860791 - 85107912 - 81508026025
Application :	ELSA 2
Description :	Caliper Repair Kit
1- T59	Guide Pin Ø35x144mm
2- C12	Screw M18x1,5x150mm
3- T60	Guide Pin Ø31x84mm
4- C13	Screw M18x1,5x90mm
5- K24	Boot
6- S7	Metal Tap (44x30mm)
7- T49	Ring
8- B3	Bush
9- B8	Bush
10- C17	Screw M10x1,25x20mm
11- C14	Screw M16x1,5x40mm

ANDTECH No :	0810 20313
Org. Ref. No :	MCK1289
Application :	ELSA 2
Description :	Caliper Repair Kit
1- T59	Guide Pin Ø35x144mm
2- C12	Screw M18x1,5x150mm
3- T60	Guide Pin Ø31x84mm
4- C13	Screw M18x1,5x90mm
5- K24	Boot
6- S7	Metal Tap (44x30mm)
7- T49	Ring
8- B3	Bush
9- T425	Bush
10- C17	Screw M10x1,25x20mm
11- C14	Screw M16x1,5x40mm

www.andacotomotiv.com

MERITOR

ANDTECH No :	0810 20329
Org. Ref. No :	
Application :	ELSA 2
Description :	Caliper Repair Kit
1- T59	Guide Pin Ø35x144mm
2- T60	Guide Pin Ø31x84mm
3- C12	Screw M18x1,5x150mm
4- C13	Screw M18x1,5x90mm
5- C14	Screw M16x1,5x40mm
6- K23	Boot
7- K24	Boot
8- S7	Metal Tap (44x30mm)
9- T49	Ring
10- B3	Bush
11- T425	Bush

ANDTECH No :	0810 20325
Org. Ref. No :	
Application :	ELSA 2
Description :	Caliper Repair Kit
1- T172	Guide Pin Ø35x125mm
2- C5	Screw M20x1.5x150mm
3- T171	Guide Pin Ø33/35x66mm
4- C6	Screw M20x1.5x90mm
5- S49	Metal Ring
6- C17	Screw M10x1.25x20mm
7- K24	Boot
8- S7	Metal Tap (44x30mm)
9- C14	Screw M16x1.5x40mm
10- B3	Bush
11- K23	Dust Cover

ANDTECH No :	0810 20247
Org. Ref. No :	MCK1086 - 5001858717
Application :	ELSA 2
Description :	Caliper Repair Kit
1- T172	Guide Pin Ø35x125mm
2- C5	Screw M20x1,5x150mm
3- T171	Guide Pin Ø33/35x66mm
4- C6	Screw M20x1,5x 90mm
5- S49	Metal Ring
6- C17	Screw M10x1,25x20mm
7- K24	Boot
8- S7	Metal Tap (44x30mm)
9- C14	Screw M16x1,5x40mm
10- B3	Bush

www.andacotomotiv.com

All original numbers, marks and models from vehicle manufacturers listed in this catalogue are for comparison purposes only, and may not be used in invoices.

MERITOR

ANDTECH No :	0810 20248
Org. Ref. No :	SJ4011 - MCK1213 - 0004200676 81508026008 - 81508026009 - SJ1228
Application :	MB, MAN, RVI, D3
Description :	Caliper Repair Kit
1- K32	Dust Cover
2- S37	Metal Tap (61x20mm)
3- B26	Bush
4- B27	Bush
5- S42	Metal Tap (37x12mm)
6- T42	Guide Pin Ø32x117mm
7- T43	Guide Pin Ø32x73mm
8- C32	Screw M18x1,5x120mm
9- C42	Screw M18x1,5x95mm

ANDTECH No :	0810 20249
Org. Ref. No :	SJ4001 - 5001822994
Application :	MB, MAN, RVI, D3
Description :	Caliper Repair Kit
1- K32	Dust Cover
2- S37	Metal Tap (61x20mm)
3- S42	Metal Tap (37x12mm)
4- T42	Guide Pin Ø32x117mm
5- T43	Guide Pin Ø32x73mm
6- C32	Screw M18x1,5x120mm
7- C42	Screw M18x1,5x95mm

ANDTECH No :	0810 20357
Org. Ref. No :	SJ4032
Application :	C LISA, D LISA
Description :	Caliper Repair Kit
1- CN1	Gasket
2- K71	Boot
3- K72	O-Ring
4- K73	Boot
5- K24	Boot
6- K75	Boot

www.andacotomotiv.com

MERITOR

ANDTECH No :	0810 20251
Org. Ref. No :	SJ4078 - 3098113 - 3097526
Application :	D LISA
Description :	Caliper Repair Kit
1- CN1	Gasket
2- K71	Boot
3- K72	O-Ring
4- K73	Boot
5- K24	Boot
6- S36	Metal Ring
7- K74	Seal 40x57x4.5mm
8- K75	Boot
9- K76	Seal
10- HR1	Grease Nipple

ANDTECH No :	0810 20252
Org. Ref. No :	SJ4061
Application :	C LISA
Description :	Caliper Repair Kit
1- CN1	Gasket
2- K71	Boot
3- K72	O-Ring
4- K73	Boot
5- S36	Metal Ring
6- K74	Seal 40x57x4.5mm
7- K75	Boot
8- K76	Seal

ANDTECH No :	0810 20253
Org. Ref. No :	MCK1244 - 5001860792
Application :	ELSA 2, ELSA 195, ELSA 225, EX 225
Description :	Caliper Repair Kit
1- K23	Dust Cover
2- K24	Boot
3- K25	Dust Cover
4- S7	Metal Tap (44x30mm)
5- C14	Screw M16x1,5x40mm
6- K86	Seal

www.andacotomotiv.com

All original numbers, marks and models from vehicle manufacturers listed in this catalogue are for comparison purposes only, and may not be used in invoices.

MERITOR

ANDTECH No :	0810 20254
Org. Ref. No :	MCK1299 - 3095628 - 85107718
Application :	B DUCO, C DUCO, D DUCO, LE DUCO
Description :	Caliper Repair Kit
1- T34	Guide Pin Ø35x102mm
2- C9	Screw M20x2x125mm
3- K24	Boot
4- S3	Metal Tap (40x17mm)
5- C11	Screw M20x2x80mm

ANDTECH No :	0810 20255
Org. Ref. No :	MCK1065
Application :	B DUCO, C DUCO, D DUCO, LE DUCO
Description :	Caliper Repair Kit
1- T34	Guide Pin Ø35x102mm
2- K24	Boot
3- S3	Metal Tap (40x17mm)

ANDTECH No :	0810 20342
Org. Ref. No :	KIT225200 - 225200
Application :	ELSA 195, ELSA 225, EX 225
Description :	Caliper Repair Kit
1- T175	Guide Pin Ø35x117mm
2- C32	Screw M18x1.5x120mm
3- T174	Guide Pin Ø31x78mm
4- C33	Screw M18x1.5x82mm
5- C14	Screw M16x1.5x40mm
6- K24	Boot
7- K23	Dust Cover
8- S7	Metal Tap (44x30mm)

www.andacotomotiv.com

MERITOR

ANDTECH No :	0810 20256
Org. Ref. No :	MCK1310 - 85109892 - 5001868400
Application :	ELSA 195, ELSA 225, EX 225
Description :	Caliper Repair Kit
1- C14	Screw M16x1,5x40mm
2- C49	Screw M14x1,5x40mm
3- C32	Screw M18x1,5x120mm
4- K24	Boot
5- S26	Metal Tap (44x26mm)

ANDTECH No :	0810 20343
Org. Ref. No :	KIT225201 - 225201
Application :	ELSA 195, ELSA 225, EX 225
Description :	Caliper Repair Kit
1- C14	Screw M16x1.5x40mm
2- K24	Boot
3- K23	Dust Cover
4- K25	Dust Cover

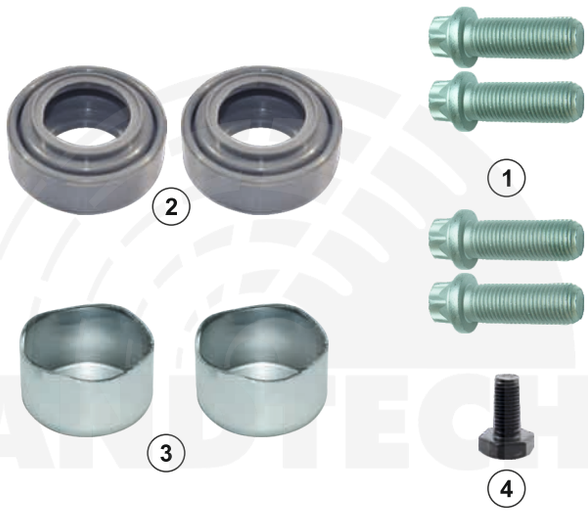

ANDTECH No :	0810 20366
Org. Ref. No :	MCK1087
Application :	ELSA 195, ELSA 225, EX 225
Description :	Caliper Repair Kit
1- C49	Screw M14x1,5x40mm
2- K24	Boot
3- S26	Metal Tap (44x26mm)
4- C17	Screw M10x1,25x20mm

www.andacotomotiv.com

All original numbers, marks and models from vehicle manufacturers listed in this catalogue are for comparison purposes only, and may not be used in invoices.

MERITOR

ANDTECH No :	0810 20257
Org. Ref. No :	MCK1253 - 884368
Application :	ELSA 195, ELSA 225, EX 225
Description :	Caliper Repair Kit
1- C14	Screw M16x1,5x40mm
2- K24	Boot
3- S7	Metal Tap (44x30mm)

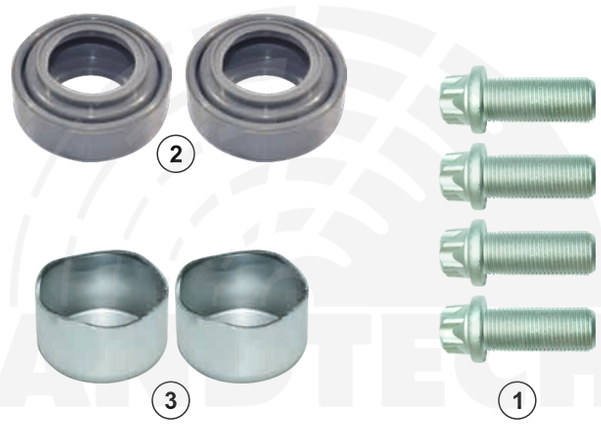

ANDTECH No :	0810 20358
Org. Ref. No :	MCK1088 - 5001858718
Application :	ELSA 2, ELSA 195, ELSA 225, EX 225
Description :	Caliper Repair Kit
1- K23	Dust Cover
2- K24	Boot
3- K25	Dust Cover
4- C14	Screw M16x1,5x40mm
5- K86	Seal

ANDTECH No :	0810 20258
Org. Ref. No :	
Application :	ELSA 2, ELSA 195, ELSA 225, EX 225
Description :	Caliper Repair Kit
1- K23	Dust Cover
2- K24	Boot
3- K25	Dust Cover
4- K86	Seal

www.andacotomotiv.com

MERITOR

ANDTECH No :	0810 20304
Org. Ref. No :	KIT225221 - 225221
Application :	ELSA 2, ELSA 195, ELSA 225, EX 225
Description :	Caliper Repair Kit
1- B8	Bush
2- B3	Bush
3- S7	Metal Tap (44x30mm)
4- S11	Ring

ANDTECH No :	0810 20326
Org. Ref. No :	SJ4021 - 8550881
Application :	D LISA
Description :	Caliper Repair Kit
1- C5	Screw M20x1.5x150mm
2- C18	Screw M20x1.5x100mm
3- S8	Metal Tap (45x10mm)

ANDTECH No :	0810 20344
Org. Ref. No :	MCK1067 - 3095626
Application :	D DUCO
Description :	Caliper Gear and Springs Kit
1- S23	Center Gear Sheet
2- Y5	Spring Ø6x61mm
3- Y4	Spring Ø4x55mm
4- Y53	Spring Ø4x61mm
5- S84	Anti-Rotation Pad

www.andacotomotiv.com

All original numbers, marks and models from vehicle manufacturers listed in this catalogue are for comparison purposes only, and may not be used in invoices.

MERITOR

ANDTECH No :	0810 20345
Org. Ref. No :	
Application :	D DUCO
Description :	Caliper Gear and Springs Kit
1- S23	Center Gear Sheet
2- Y5	Spring Ø6x61mm
3- Y4	Spring Ø4x55mm
4- Y53	Spring Ø4x61mm

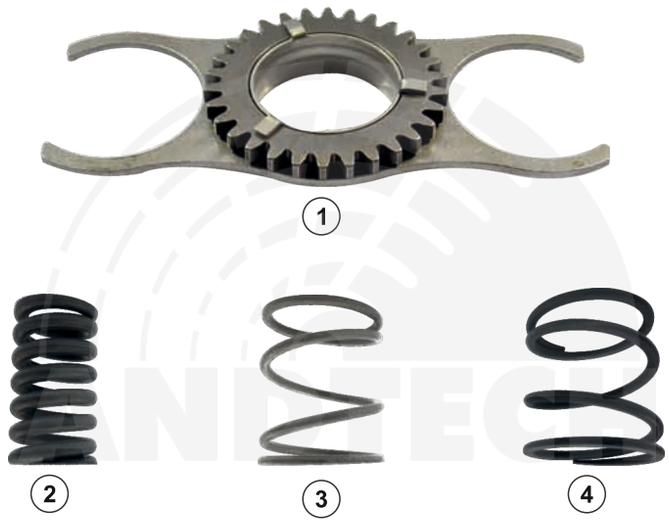

ANDTECH No :	0810 20259
Org. Ref. No :	
Application :	D DUCO
Description :	Caliper Gear and Springs Kit
1- S23	Center Gear Sheet
2- Y4	Spring Ø4x55mm
3- Y5	Spring Ø6x61mm

ANDTECH No :	0810 20260
Org. Ref. No :	MCK1129 - 85102099
Application :	C DUCO, LE DUCO
Description :	Caliper Gear and Springs Kit
1- S85	Center Gear Sheet
2- Y40	Center Gear Spring (Big)
3- Y41	Center Gear Spring (Small)

www.andacotomotiv.com

MERITOR

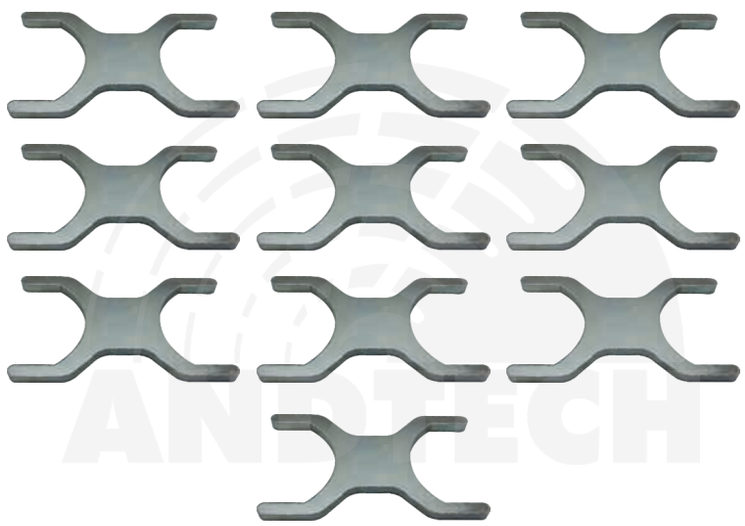

ANDTECH No :	0810 20467
Org. Ref. No :	68322485PK10
Application :	C DUCO – LE DUCO
Description :	Caliper Anti-Rotation Pad Kit
1- S176	Anti Rotation Pad

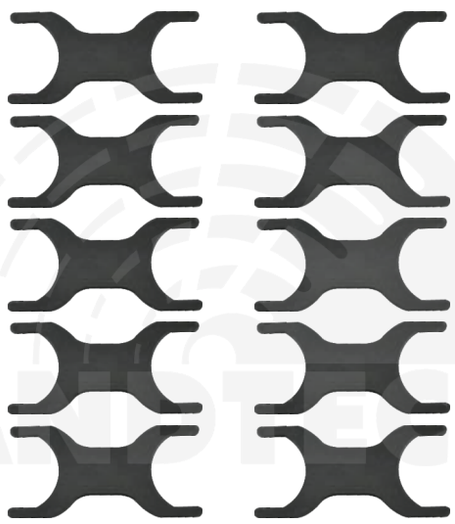

ANDTECH No :	0810 20261
Org. Ref. No :	68322900PK10
Application :	B DUCO, D DUCO
Description :	Anti-Rotation Pad Kit
1- S84	Anti-Rotation Pad

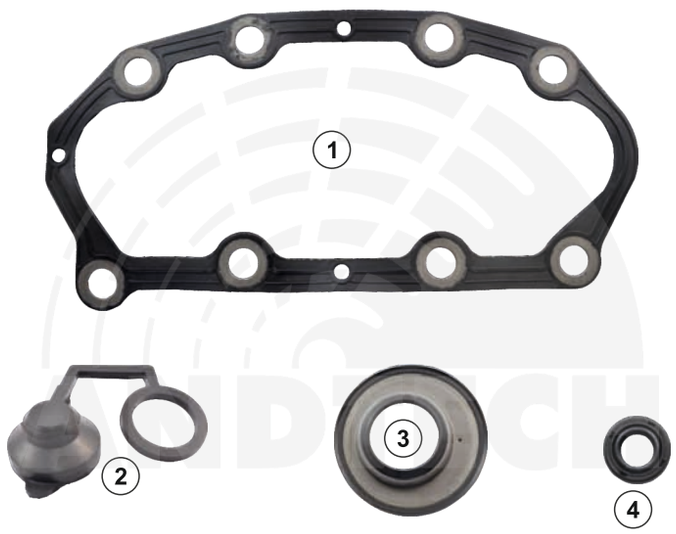

ANDTECH No :	0810 20270
Org. Ref. No :	SJ4109 - 3092270
Application :	D DUCO RADIAL
Description :	Caliper Cover Plate Gasket Kit
1- K27	Gasket
2- K26	Dust Cover
3- K30	Eccentric Seal
4- K31	Seal

www.andacotomotiv.com

All original numbers, marks and models from vehicle manufacturers listed in this catalogue are for comparison purposes only, and may not be used in invoices.

MERITOR

ANDTECH No :	0810 20271
Org. Ref. No :	
Application :	D DUCO RADIAL
Description :	Caliper Cover Plate Gasket
1- K27	Gasket

ANDTECH No :	0810 20272
Org. Ref. No :	MCK1041 - 3095669
Application :	B DUCO, C DUCO, LE DUCO
Description :	Caliper Cover Plate Gasket Kit
1- K28	Gasket
2- K25	Dust Cover
3- K30	Eccentric Seal
4- K31	Seal

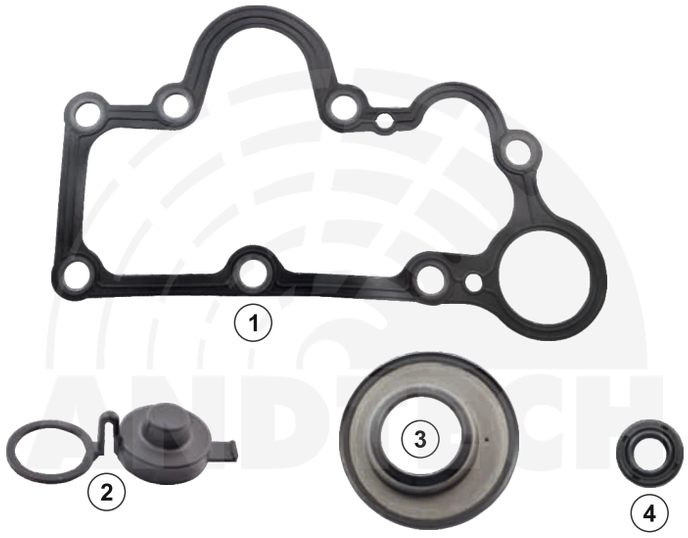

ANDTECH No :	0810 20273
Org. Ref. No :	
Application :	B DUCO, C DUCO, LE DUCO
Description :	Caliper Cover Plate Gasket
1- K28	Gasket

www.andacotomotiv.com

MERITOR

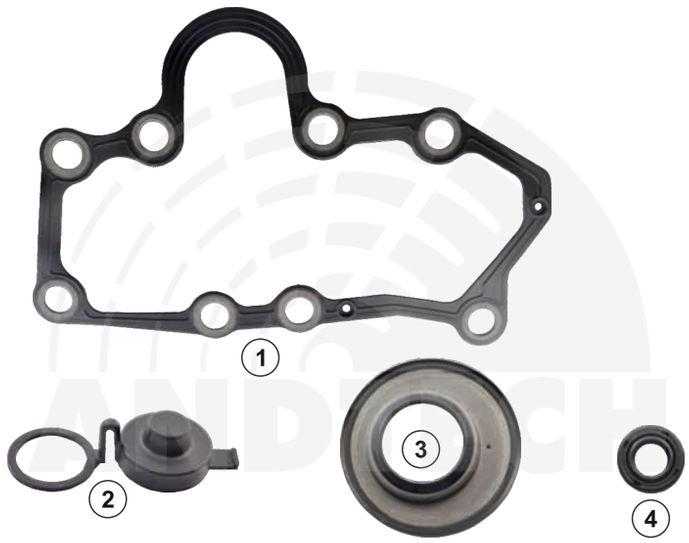

ANDTECH No :	0810 20274
Org. Ref. No :	SJ4105 - 3092269
Application :	D DUCO
Description :	Caliper Cover Plate Gasket Kit
1- K29	Gasket
2- K25	Dust Cover
3- K30	Eccentric Seal
4- K31	Seal

ANDTECH No :	0810 20275
Org. Ref. No :	68322774
Application :	D DUCO
Description :	Caliper Cover Plate Gasket
1- K29	Gasket

ANDTECH No :	0810 20337
Org. Ref. No :	
Application :	ELSA 2
Description :	Caliper Calibration Mechanism Gasket Kit
1- K34	Gasket
2- K24	Boot
3- K23	Dust Cover

www.andacotomotiv.com

All original numbers, marks and models from vehicle manufacturers listed in this catalogue are for comparison purposes only, and may not be used in invoices.

MERITOR

ANDTECH No :	0810 20338
Org. Ref. No :	
Application :	ELSA 195, ELSA 225, EX 225
Description :	Caliper Calibration Mechanism Gasket Kit
1- K93	Gasket
2- K24	Boot
3- K23	Dust Cover

ANDTECH No :	0810 20276
Org. Ref. No :	68324270
Application :	ELSA 2
Description :	Caliper Calibration Mechanism Gasket
1- K34	Gasket

ANDTECH No :	0810 20277
Org. Ref. No :	
Application :	ELSA 195, ELSA 225, EX 225
Description :	Caliper Calibration Mechanism Gasket
1- K93	Gasket

www.andacotomotiv.com

All original numbers, marks and models from vehicle manufacturers listed in this catalogue are for comparison purposes only, and may not be used in invoices.

MERITOR

ANDTECH No :	0810 20278
Org. Ref. No :	68322655PK10
Application :	All DUCO, All ELSA
Description :	Caliper Adjusting Dust Cover
1- K25	Dust Cover

ANDTECH No :	0810 20279
Org. Ref. No :	3092282
Application :	D DUCO RADIAL
Description :	Caliper Adjusting Dust Cover
1- K26	Dust Cover

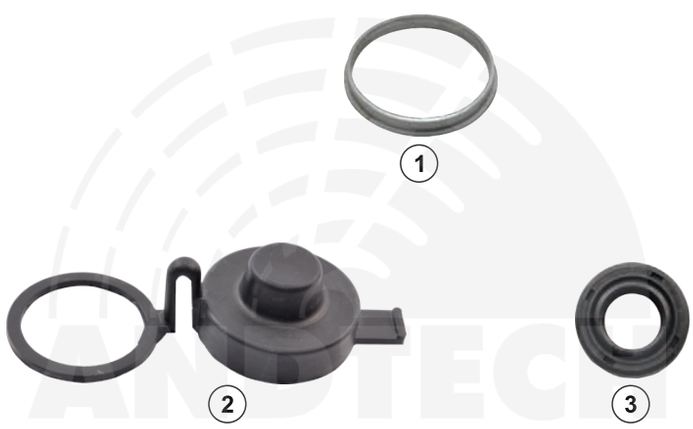

ANDTECH No :	0810 20466
Org. Ref. No :	
Application :	ELSA 2, EX225
Description :	Caliper Repair Kit
1- S201	Spring
2- K25	Dust Cover
3- K31	Seal

www.andacotomotiv.com

All original numbers, marks and models from vehicle manufacturers listed in this catalogue are for comparison purposes only, and may not be used in invoices.

MERITOR

ANDTECH No :	0810 20280
Org. Ref. No :	68323746PK10
Application :	ELSA 2, ELSA 195, ELSA 225
Description :	Caliper Seal
1- K86	Seal

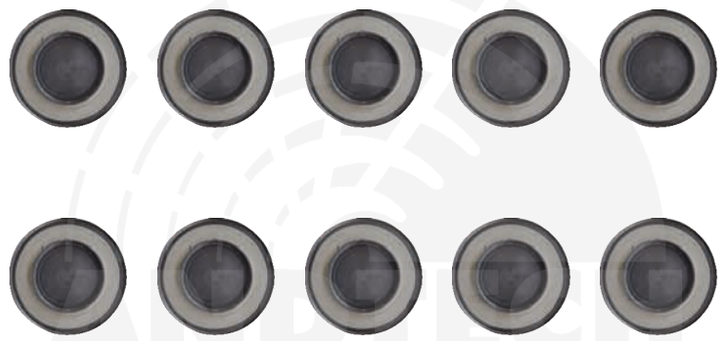

ANDTECH No :	0810 20281
Org. Ref. No :	
Application :	ELSA 1
Description :	Caliper Cover Plate Gasket
1- CN4	Gasket

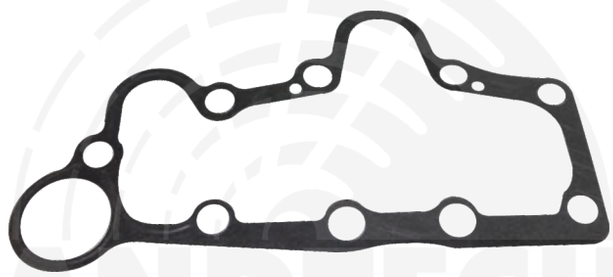

ANDTECH No :	0810 20282
Org. Ref. No :	
Application :	ELSA 1
Description :	Caliper Cover Plate Gasket
1- CN5	Gasket

ANDTECH No :	0810 20283
Org. Ref. No :	
Application :	ELSA 1
Description :	Caliper Cover Plate Gasket
1- CN6	Gasket

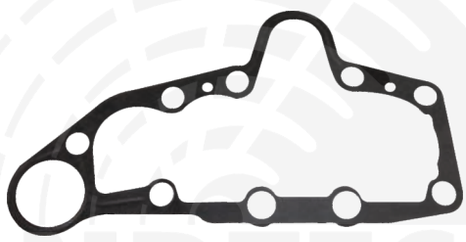

www.andacotomotiv.com

MERITOR

ANDTECH No :	0810 20284
Org. Ref. No :	68320912 - 68321272 - 0004230062 81.50822.0003 - 5001822997 8285388449 - 746871 - 0501314109
Application :	MB, MAN, RVI, D3
Description :	Caliper Push Plate
1- T125	Push Plate

ANDTECH No :	0810 20285
Org. Ref. No :	68915080 - 68915081
Application :	C LISA, D LISA
Description :	Caliper Lever
1- T258	Lever
2- C55	Screw

ANDTECH No :	0810 20286
Org. Ref. No :	SJ4117 - 3092765
Application :	LISA
Description :	Caliper Push Plate
1- T236	Push Plate

ANDTECH No :	0810 20346
Org. Ref. No :	68322562PK
Application :	DUCO - ELSA 1
Description :	Caliper Mechanism Gear (Left)
1- P42	Plastic Gear

www.andacotomotiv.com

All original numbers, marks and models from vehicle manufacturers listed in this catalogue are for comparison purposes only, and may not be used in invoices.

MERITOR

ANDTECH No :	0810 20347
Org. Ref. No :	68322563PK
Application :	DUCO - ELSA 1
Description :	Caliper Mechanism Gear (Right)
1- P43	Plastic Gear

ANDTECH No :	0810 20291
Org. Ref. No :	68322300PK
Application :	ELSA 1
Description :	Caliper Repair Kit
1- K41	Rubber Tap
2- K31	Seal
3- T117	Bush

ANDTECH No :	0810 20340
Org. Ref. No :	MCK1352 - MST1504
Application :	ALL ELSA, EX 225
Description :	Caliper Adaptor Plug Kit
1- P44	Adaptor Plug
2- S120	Plug Sheet
3- C52	Screw M10x1.25x16mm
4- C23	Screw M8x1.25x15mm
5- K31	Seal
6- K120	O-Ring

ANDTECH No :	0810 20262
Org. Ref. No :	68321678PK
Application :	ELSA 1
Description :	Caliper Locking Shim
1- S22	Locking Shim

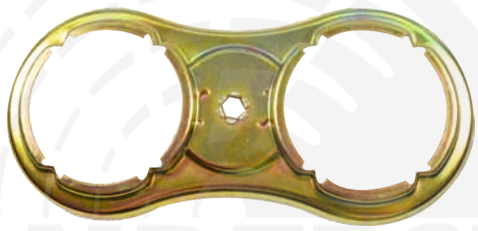

www.andacotomotiv.com

MERITOR

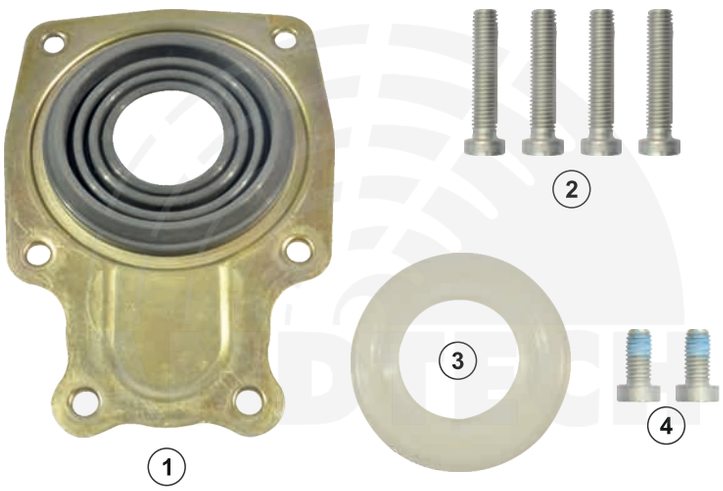

ANDTECH No :	0810 20263
Org. Ref. No :	SJ1212 - 5001831176 81508026007 - 0004230082
Application :	MB, MAN, RVI, D3
Description :	Caliper Cover and Bolts
1- S65	Cover
2- C47	Screw M8x40mm
3- P13	Dust Cover
4- C48	Screw M8x15mm

ANDTECH No :	0810 20333
Org. Ref. No :	
Application :	MB, MAN, RVI, D3
Description :	Caliper Clutch System Small (Right)
1- T193	Caliper Gear
2- Y42	Torsion Spring
3- S94	Wavy Washer
4- K35	Rubber Cap
5- T270	Adjuster Bolt M06x1.5x50mm

ANDTECH No :	0810 20327
Org. Ref. No :	
Application :	MB, MAN, RVI, D3
Description :	Caliper Clutch System Small (Right)
1- T193	Caliper Gear
2- Y42	Torsion Spring
3- S94	Wavy Washer
4- K35	Rubber Cap
5- T270	Adjuster Bolt M06x1.5x50mm
6- T410	Spring Plate
7- K40	O-Ring
8- C22	Bolt Nut

www.andacotomotiv.com

All original numbers, marks and models from vehicle manufacturers listed in this catalogue are for comparison purposes only, and may not be used in invoices.

MERITOR

ANDTECH No :	0810 20334
Org. Ref. No :	
Application :	MB, MAN, RVI, D3
Description :	Caliper Clutch System Small (Left)
1- T193	Caliper Gear
2- Y43	Torsion Spring
3- S94	Wavy Washer
4- K35	Rubber Cap
5- T270	Adjuster Bolt M06x1.5x50mm

ANDTECH No :	0810 20328
Org. Ref. No :	
Application :	MB, MAN, RVI, D3
Description :	Caliper Clutch System Small (Left)
1- T193	Caliper Gear
2- Y42	Torsion Spring
3- S94	Wavy Washer
4- K35	Rubber Cap
5- T270	Adjuster Bolt M06x1.5x50mm
6- T410	Spring Plate
7- K40	O-Ring
8- C22	Bolt Nut

ANDTECH No :	0810 20335
Org. Ref. No :	
Application :	MB, MAN, RVI, D3
Description :	Caliper Clutch System Big (Right)
1- Y47	Torsion Spring
2- T271	Housing
3- S95	Washer
4- S96	Washer
5- S117	Locking Shim
6- Y54	Spring

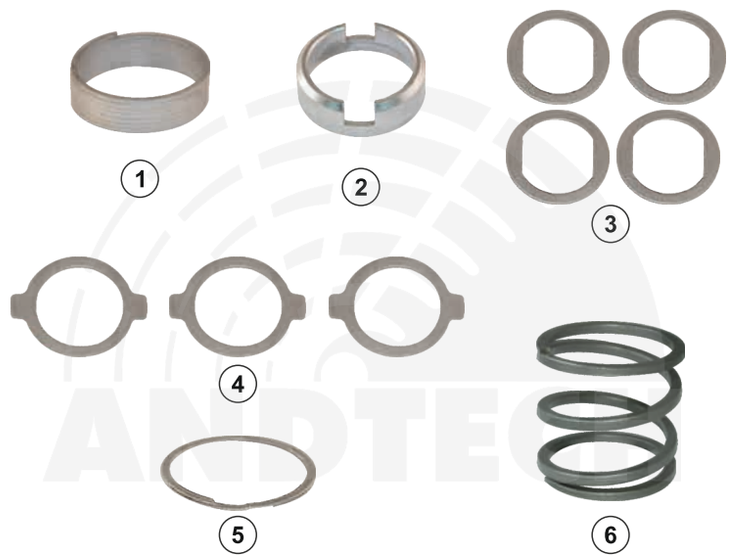

www.andacotomotiv.com

MERITOR

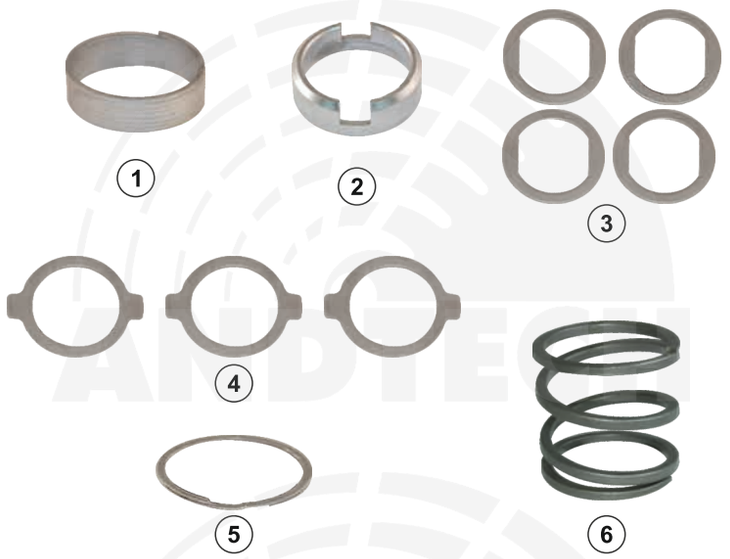

ANDTECH No :	0810 20336
Org. Ref. No :	
Application :	MB, MAN, RVI, D3
Description :	Caliper Clutch System Big (Left)
1- Y48	Torsion Spring
2- T271	Housing
3- S95	Washer
4- S96	Washer
5- S117	Locking Shim
6- Y54	Spring

ANDTECH No :	0810 20264
Org. Ref. No :	654147780414PK
Application :	MB, MAN, RVI, D3
Description :	Caliper Dust Cover
1- K32	Dust Cover

ANDTECH No :	0810 20368
Org. Ref. No :	
Application :	MB, MAN, RVI, D3
Description :	Caliper Roller Bearing Kit
1- R6	Roller Bearing
2- R7	Roller Bearing
3- S59	Wavy Washer

ANDTECH No :	0810 20265
Org. Ref. No :	
Application :	MB, MAN, RVI, D3
Description :	Caliper Roller Bearing
1- R6	Roller Bearing

www.andacotomotiv.com

All original numbers, marks and models from vehicle manufacturers listed in this catalogue are for comparison purposes only, and may not be used in invoices.

MERITOR

ANDTECH No :	0810 20266
Org. Ref. No :	
Application :	MB, MAN, RVI, D3
Description :	Caliper Roller Bearing
1- R7	Roller Bearing

ANDTECH No :	0810 20267
Org. Ref. No :	
Application :	MB, MAN, RVI, D3
Description :	Caliper Gear
1- T193	Gear

ANDTECH No :	0810 20369
Org. Ref. No :	
Application :	MB, MAN, RVI, D3
Description :	Caliper Wavy Washer
1- S118	Wavy Washer

ANDTECH No :	0810 20268
Org. Ref. No :	
Application :	MB, MAN, RVI, D3
Description :	Caliper Wavy Washer
1- S59	Wavy Washer

www.andacotomotiv.com

MERITOR

ANDTECH No :	0810 20269
Org. Ref. No :	68320507PK10
Application :	MB, MAN, RVI, D3
Description :	Caliper Dust Cover
1- P9	Dust Cover

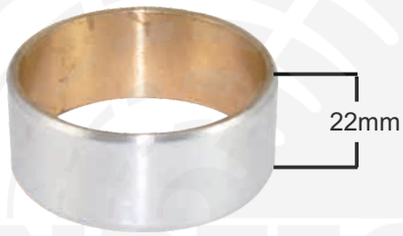

ANDTECH No :	0810 20370
Org. Ref. No :	
Application :	MB, MAN, RVI, D3
Description :	Caliper Shaft Bush
1- B36	Bush

ANDTECH No :	0810 20371
Org. Ref. No :	
Application :	MB, MAN, RVI, D3
Description :	Caliper Shaft Bush
1- B37	Bush

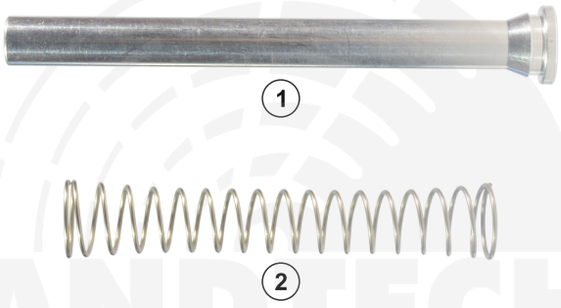

ANDTECH No :	0810 20287
Org. Ref. No :	
Application :	ELSA 2
Description :	Caliper Pad Wear Assembly
1- T116	Pin
2- Y34	Spring

www.andacotomotiv.com

All original numbers, marks and models from vehicle manufacturers listed in this catalogue are for comparison purposes only, and may not be used in invoices.

MERITOR

ANDTECH No :	0810 20288
Org. Ref. No :	SJ4111 - 3092283
Application :	B DUCO, C DUCO, D DUCO, LE DUCO
Description :	Caliper Pad Wear Assembly
1- P25	Pin
2- Y39	Spring

ANDTECH No :	0810 20289
Org. Ref. No :	MCK1296 - MCK1311 - 85109883 - KIT225207 - 225207
Application :	ELSA 195, ELSA 225, EX 225
Description :	Caliper Pad Wear Assembly
1- P24	Pin
2- Y34	Spring

ANDTECH No :	0810 20290
Org. Ref. No :	
Application :	ELSA 2
Description :	Caliper Pad Wear Assembly
1- P26	Pin
2- Y34	Spring

ANDTECH No :	0810 20339
Org. Ref. No :	MCK1240
Application :	ELSA 2
Description :	Caliper Repair Kit
1- C14	Screw M16x1.5x40mm
2- P26	Pin
3- Y34	Spring

www.andacotomotiv.com

All original numbers, marks and models from vehicle manufacturers listed in this catalogue are for comparison purposes only, and may not be used in invoices.

MERITOR

ANDTECH No :	0810 20292
Org. Ref. No :	MCK1174 -5001858719 - 5001866486 - 85107958 - KIT225210 - 225210
Application :	ELSA 2, ELSA 195, ELSA 225
Description :	Caliper Pad Retainer
1- S41	Pad Retainer
2- C17	Screw M10x1,25x20mm

ANDTECH No :	0810 20293
Org. Ref. No :	MCK1262
Application :	MAN TGA
Description :	Caliper Pad Retainer
1- S82	Pad Retainer
2- C17	Screw M10x1,25x20mm

ANDTECH No :	0810 20294
Org. Ref. No :	MCK1264
Application :	C DUCO, D DUCO, LE DUCO
Description :	Caliper Pad Retainer
1- S83	Pad Retainer
2- C17	Screw M10x1,25x20mm

ANDTECH No :	0810 20295
Org. Ref. No :	MCK1263
Application :	B DUCO
Description :	Caliper Pad Retainer
1- S89	Pad Retainer
2- C17	Screw M10x1,25x20mm

www.andacotomotiv.com

All original numbers, marks and models from vehicle manufacturers listed in this catalogue are for comparison purposes only, and may not be used in invoices.

MERITOR

ANDTECH No :	0810 20450
Org. Ref. No :	WVA 29174 - MBA112
Application :	EX 225
Description :	Caliper Pad Retention Kit
1- S162	Retention Spring
2- C17	Screw M10x1,25x20mm

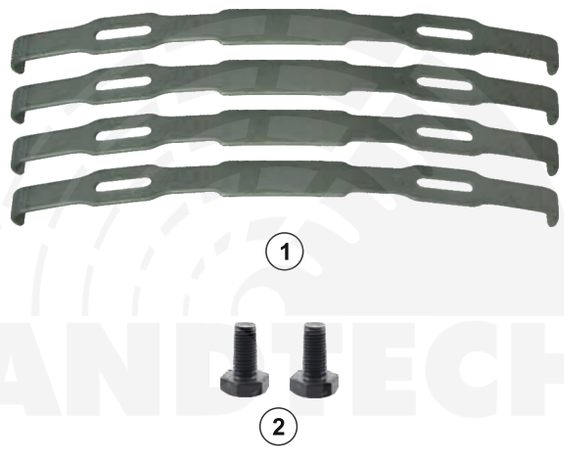

ANDTECH No :	0810 20489
Org. Ref. No :	WVA 29125 - 20768092 - 3095396
Application :	D-DUCO, VOLVO
Description :	Pad Retainer Kit
1- S204	Retention Spring
2- C17	Screw M10x1,25x20mm

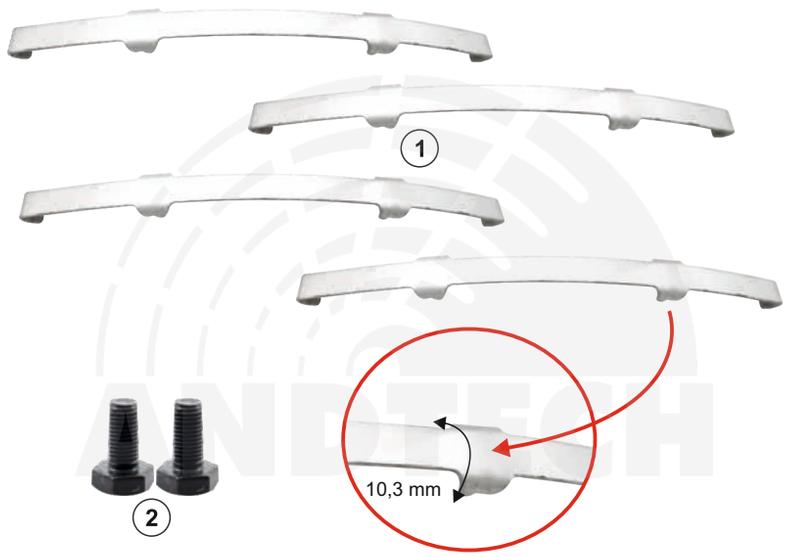

ANDTECH No :	0810 20491
Org. Ref. No :	WVA 29131
Application :	ELSA 2
Description :	Pad Retainer Kit
1- S205	Retention Spring
2- C17	Screw M10x1,25x20mm

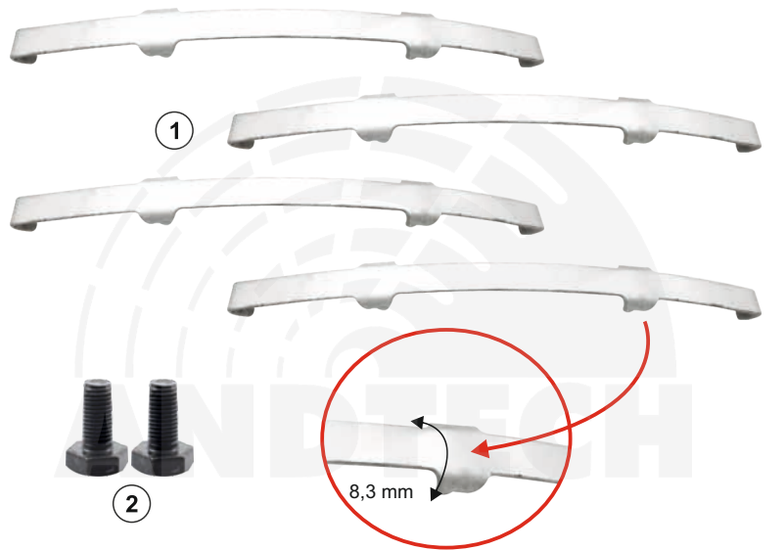

www.andacotomotiv.com

All original numbers, marks and models from vehicle manufacturers listed in this catalogue are for comparison purposes only, and may not be used in invoices.

MERITOR

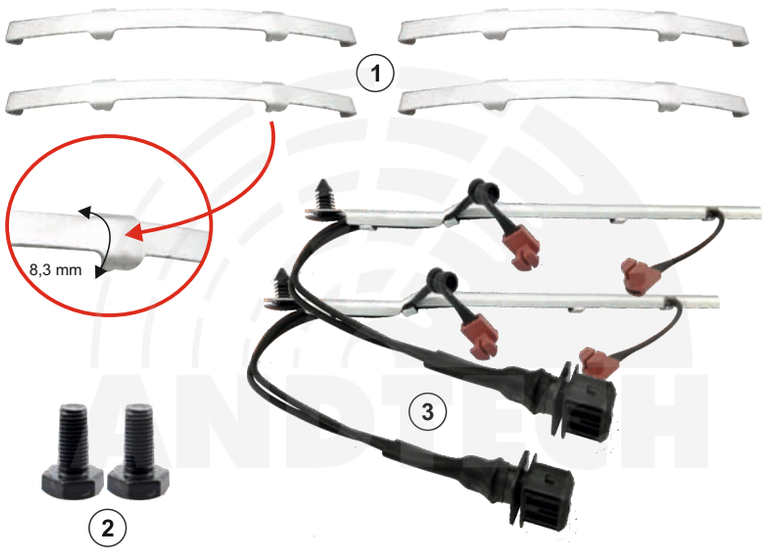

ANDTECH No :	0810 20490
Org. Ref. No :	WVA 29131 - 68324072
Application :	ELSA 2
Description :	Pad Indicator Kit
1- S205	Retention Spring
2- C17	Screw M10x1,25x20mm
3- KB003	Indicator Cable

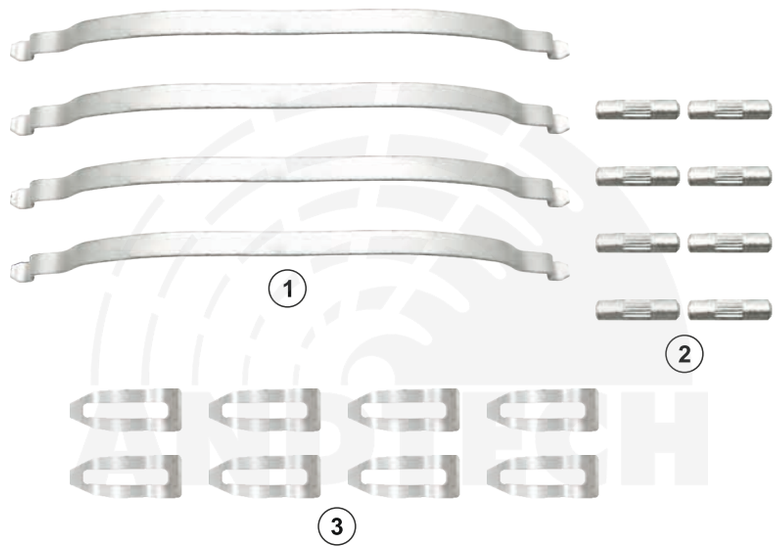

ANDTECH No :	0810 20412
Org. Ref. No :	WVA 29090 - 3093919
Application :	D-LISA
Description :	Pad Retainer Kit
1- S206	Retention Spring
2- T622	Cotter Pin
3- S207	Washer

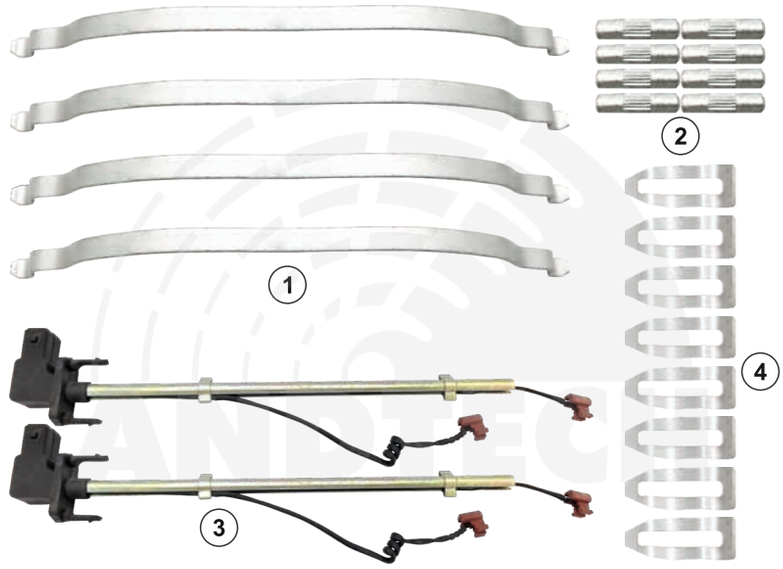

ANDTECH No :	0810 20492
Org. Ref. No :	WVA 29090 - 3093919
Application :	D-LISA
Description :	Pad Indicator Kit
1- S206	Retention Spring
2- T622	Cotter Pin
3- KB004	Indicator Cable
4- S207	Washer

www.andacotomotiv.com

All original numbers, marks and models from vehicle manufacturers listed in this catalogue are for comparison purposes only, and may not be used in invoices.

MERITOR

ANDTECH No :	0810 20493
Org. Ref. No :	WVA 29090 - 3093919
Application :	D-LISA
Description :	Pad Retainer Kit
1- S206	Retention Spring
2- T622	Cotter Pin
3- S207	Washer

ANDTECH No :	0810 20495
Org. Ref. No :	WVA 29174 - 68325408
Application :	ELSA 225
Description :	Pad Indicator Kit
1- S162	Retention Spring
2- KB005	Indicator Cable
3- C17	Screw M10x1,25x20mm

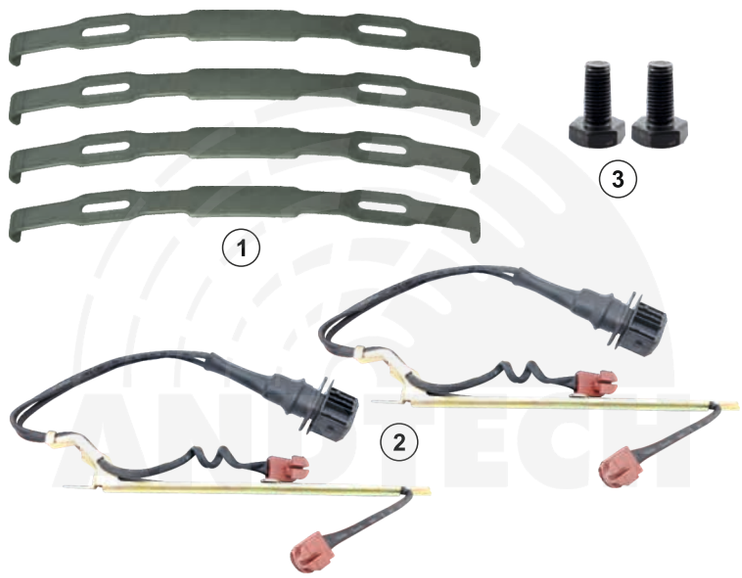

ANDTECH No :	0810 20497
Org. Ref. No :	WVA 29083
Application :	D3
Description :	Pad Indicator Kit
1- S205	Retention Spring
2- KB011	Indicator Cable
3- T623	Detent Pin
4- C57	Screw M10x1,5x20mm

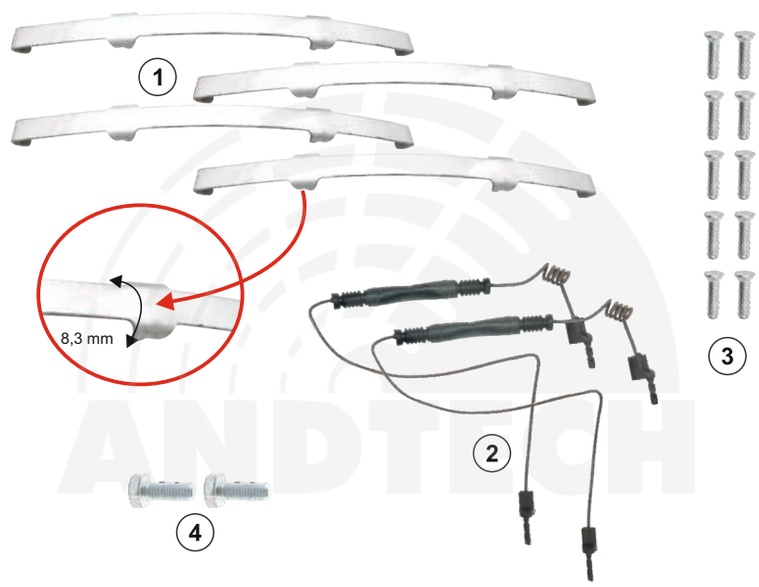

www.andacotomotiv.com

All original numbers, marks and models from vehicle manufacturers listed in this catalogue are for comparison purposes only, and may not be used in invoices.

MERITOR

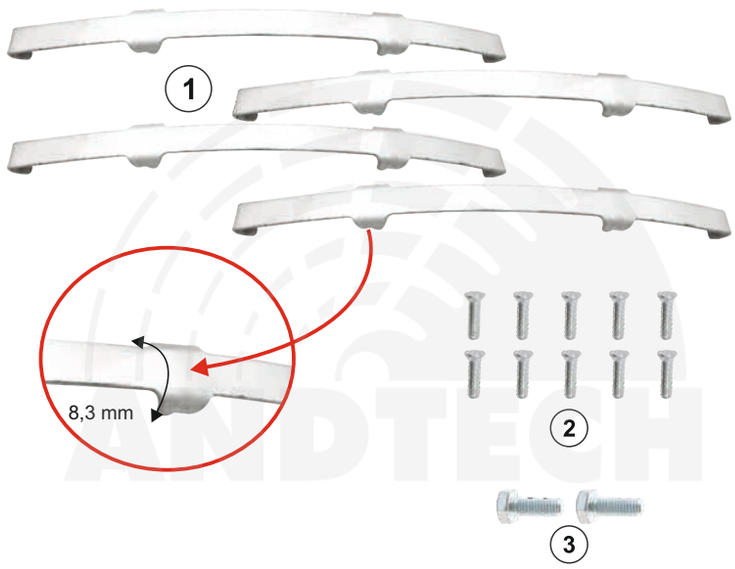

ANDTECH No :	0810 20498
Org. Ref. No :	WVA 29083
Application :	D3
Description :	Pad Retainer Kit
1- S205	Retention Spring
2- T623	Detent Pin
3- C57	Screw M10x1,5x20mm

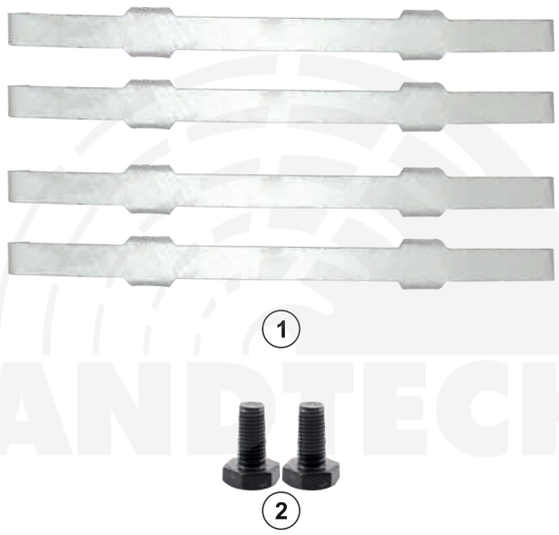

ANDTECH No :	0810 20499
Org. Ref. No :	WVA 29137
Application :	C-DUCO, VOLVO
Description :	Pad Retainer Kit
1- S217	Retention Spring
2- C17	Screw M10x1,25x20mm

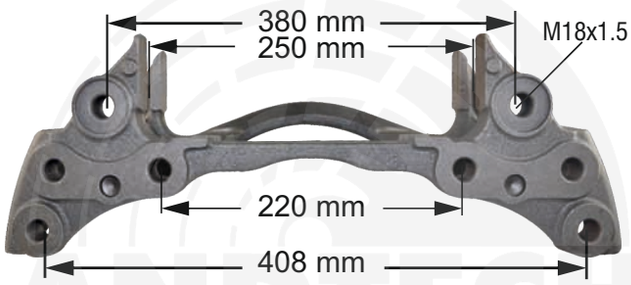

ANDTECH No :	0810 20360
Org. Ref. No :	MCK1138 - MCK1146 - MCK1247 - MCK1248 - MCK1368 - 81508026023 - 5001858713 - 85107910 - 321561193
Application :	MAN TGA 460, ELSA 2
Description :	Caliper Carrier
1- T319	Carrier 22.5"

www.andacotomotiv.com

All original numbers, marks and models from vehicle manufacturers listed in this catalogue are for comparison purposes only, and may not be used in invoices.

MERITOR

ANDTECH No :	0810 20361
Org. Ref. No :	MCK1297 - MCK1322 - 63827466
Application :	ELSA 195, ELSA 225
Description :	Caliper Carrier
1- T320	Carrier 22.5"

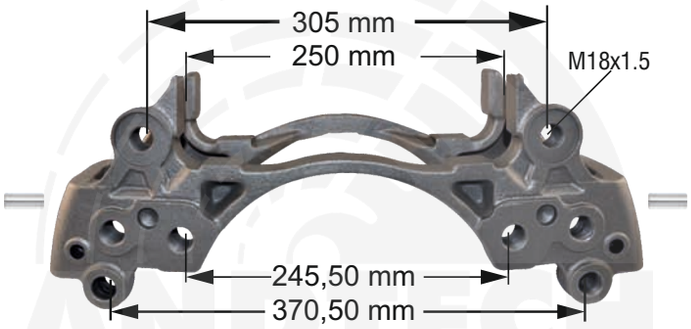

ANDTECH No :	0810 20362
Org. Ref. No :	
Application :	ELSA 2
Description :	Caliper Carrier
1- T321	Carrier 22.5"

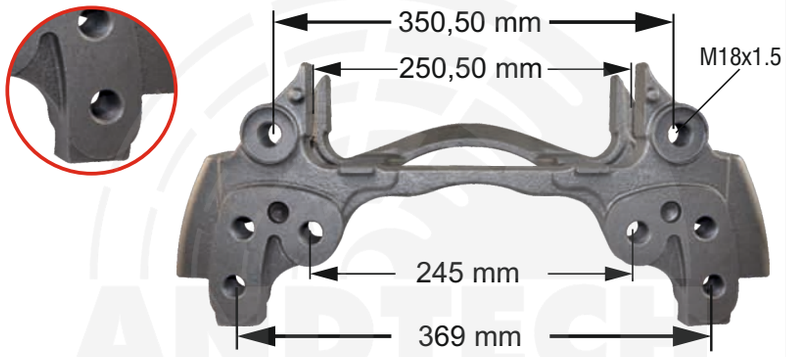

ANDTECH No :	0810 20363
Org. Ref. No :	68323675 - 68323676 - 321501720
Application :	ELSA 2
Description :	Caliper Carrier
1- T322	Carrier 22.5"

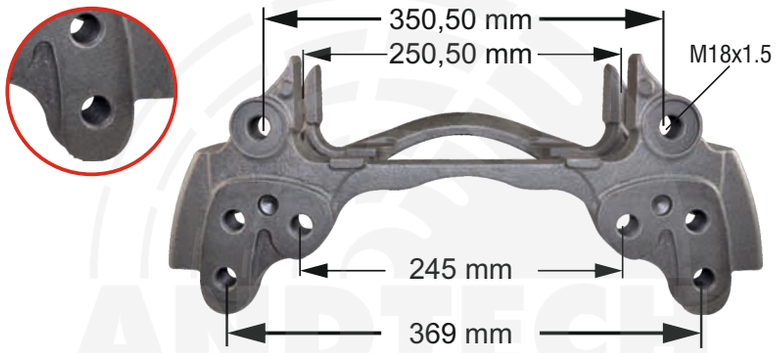

www.andacotomotiv.com

MERITOR

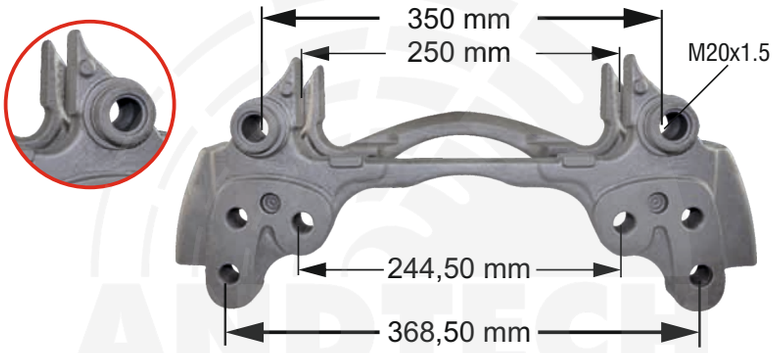

ANDTECH No :	0810 20364
Org. Ref. No :	
Application :	ELSA 2
Description :	Caliper Carrier
1- T323	Carrier 22.5"

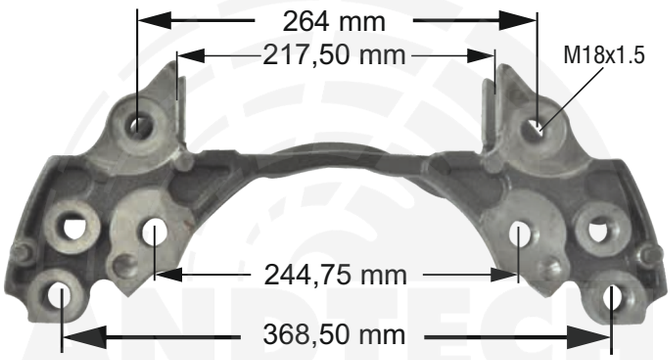

ANDTECH No :	0810 20405
Org. Ref. No :	MCK1319 - 85109887 - 5001866988 - 68327462
Application :	ELSA 225
Description :	Caliper Carrier
1- T381	Carrier 19.5"

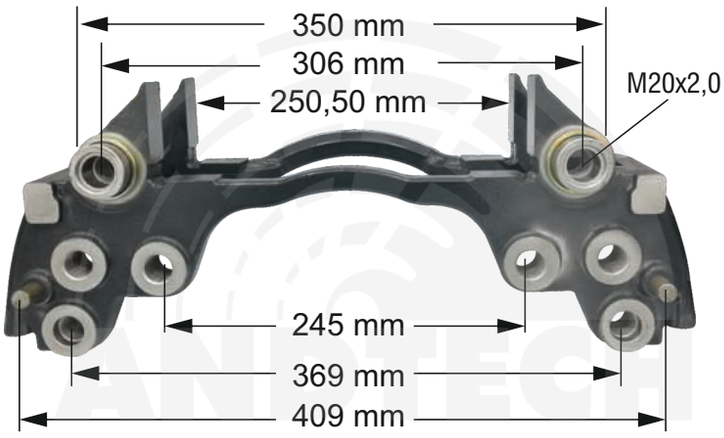

ANDTECH No :	0810 20470
Org. Ref. No :	68322778 – 1489072 – 3092253 – 68322849
Application :	D-CUCO / VOLVO / LRG650 / 51
Description :	Caliper Carrier
1- T630	Carrier 22.5”

www.andacotomotiv.com

All original numbers, marks and models from vehicle manufacturers listed in this catalogue are for comparison purposes only, and may not be used in invoices.

ANDAC
ERDGLU

EROGLU
EROGLU
ANDAÇ
ANDAÇ
kesmak

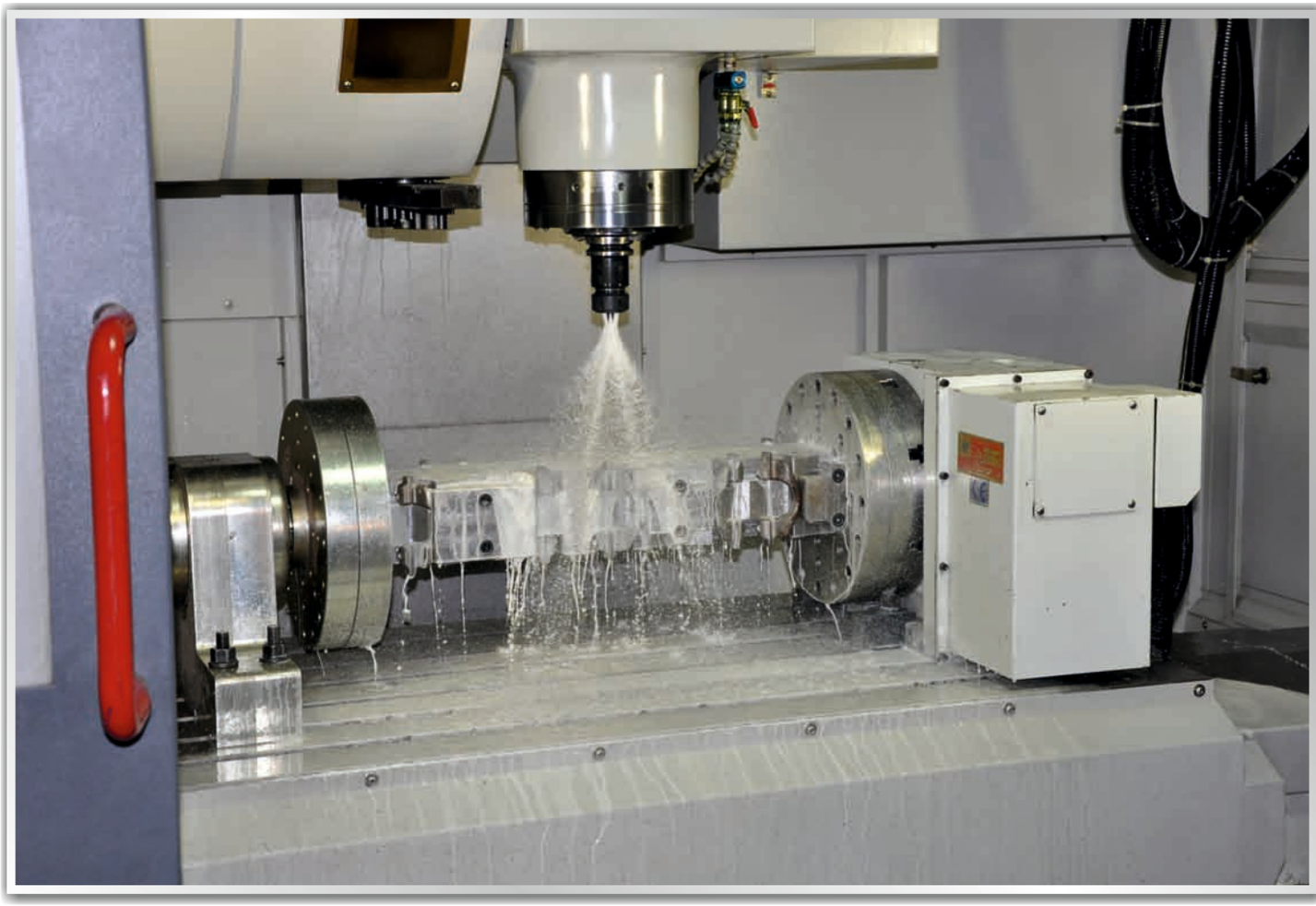

WABCO

ANDTECH No :	0810 30101
Org. Ref. No :	
Application :	19.5 - 22.5
Description :	Caliper Adjusting Mechanism Complete
1- T261	Adjusting Mechanism
2- Y44	Spring

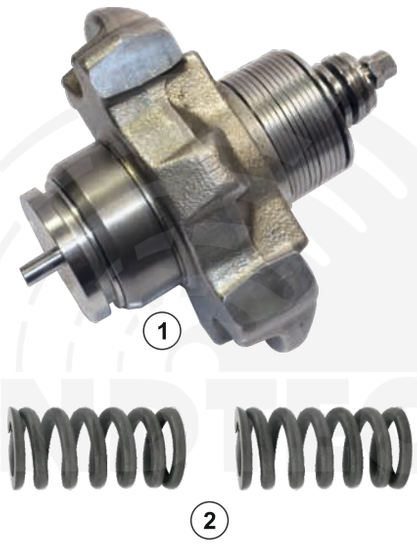

ANDTECH No :	0810 30168
Org. Ref. No :	
Application :	19.5 - 22.5
Description :	Caliper Adjusting Mechanism
1- T261	Adjusting Mechanism

ANDTECH No :	0810 30102
Org. Ref. No :	
Application :	17.5
Description :	Caliper Adjusting Mechanism Complete
1- T262	Adjusting Mechanism
2- Y44	Spring

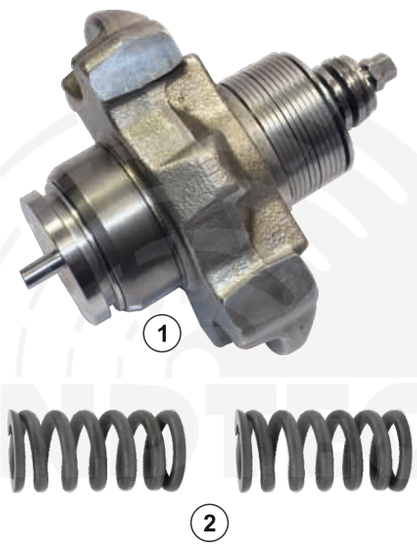

www.andacotomotiv.com

WABCO

ANDTECH No :	0810 30169
Org. Ref. No :	
Application :	17.5
Description :	Caliper Adjusting Mechanism
1- T262	Adjusting Mechanism

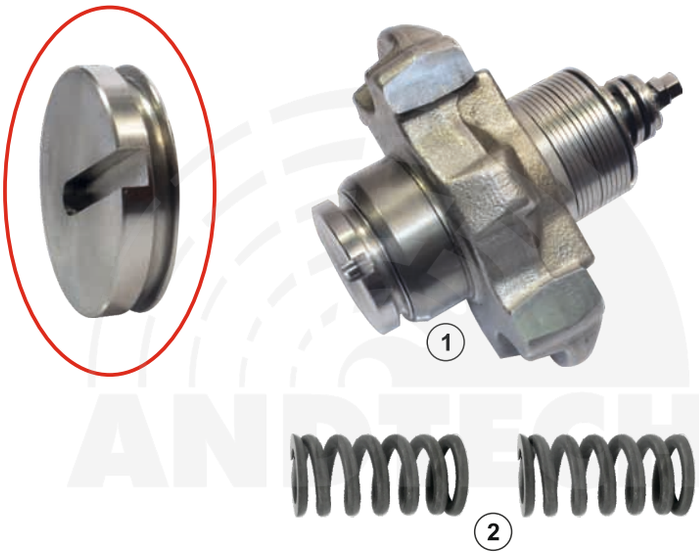

ANDTECH No :	0810 30103
Org. Ref. No :	
Application :	17.5
Description :	Caliper Adjusting Mechanism Complete
1- T263	Adjusting Mechanism
2- Y44	Spring

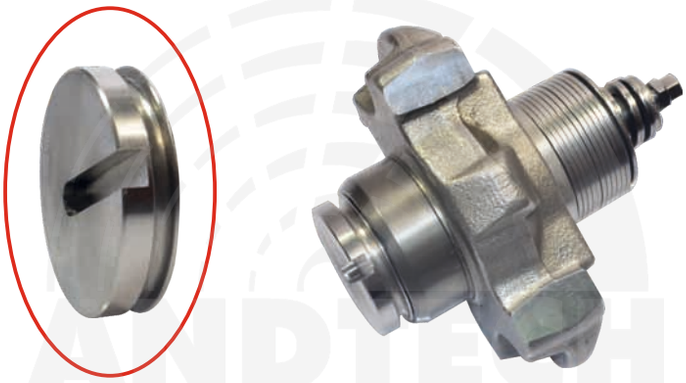

ANDTECH No :	0810 30170
Org. Ref. No :	
Application :	17.5
Description :	Caliper Adjusting Mechanism
1- T263	Adjusting Mechanism

www.andacotomotiv.com

All original numbers, marks and models from vehicle manufacturers listed in this catalogue are for comparison purposes only, and may not be used in invoices.

WABCO

ANDTECH No :	0810 30104
Org. Ref. No :	
Application :	19.5 - 22.5
Description :	Caliper Bridge
1- T250	Bridge

ANDTECH No :	0810 30171
Org. Ref. No :	
Application :	19.5 - 22.5
Description :	Caliper Bridge
1- T250	Bridge
2- Y44	Spring

ANDTECH No :	0810 30105
Org. Ref. No :	
Application :	17.5
Description :	Caliper Bridge
1- T249	Bridge

www.andacotomotiv.com

WABCO

ANDTECH No :	0810 30172
Org. Ref. No :	
Application :	17.5
Description :	Caliper Bridge
1- T249	Bridge
2- Y44	Spring

ANDTECH No :	0810 30106
Org. Ref. No :	
Application :	19.5 - 22.5
Description :	Caliper Adjusting Mechanism
1- T196	Screw
2- T133	Adjuster Pin
3- T134	Retainer
4- Y12	Spring
5- T135	Clutch

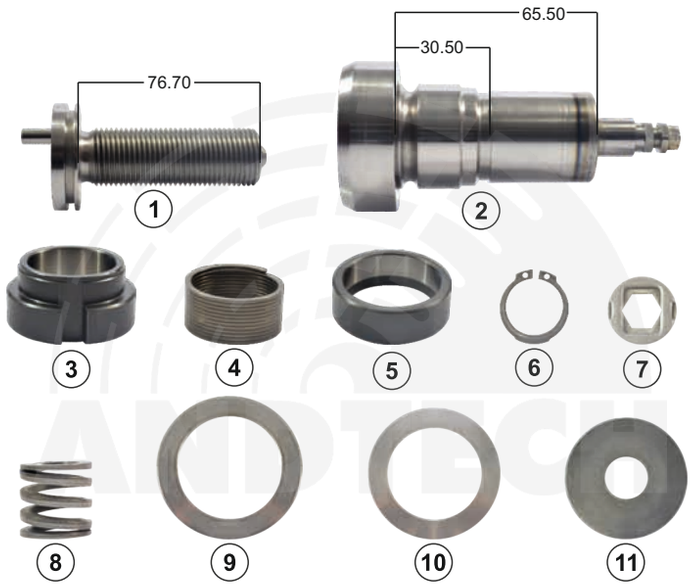

ANDTECH No :	0810 30173
Org. Ref. No :	
Application :	19.5 - 22.5
Description :	Caliper Adjusting Mechanism Kit
1- T196	Screw
2- T133	Adjuster Pin
3- T134	Retainer
4- Y12	Spring
5- T135	Clutch
6- SK7	Snap Ring
7- T252	Washer
8- Y45	Spring
9- S86	Washer
10- S87	Washer
11- S88	Washer

www.andacotomotiv.com

All original numbers, marks and models from vehicle manufacturers listed in this catalogue are for comparison purposes only, and may not be used in invoices.

WABCO

ANDTECH No :	0810 30107
Org. Ref. No :	
Application :	17.5
Description :	Caliper Adjusting Mechanism
1- T131	Screw
2- T132	Adjuster Pin
3- T134	Retainer
4- Y12	Spring
5- T135	Clutch

ANDTECH No :	0810 30174
Org. Ref. No :	
Application :	17.5
Description :	Caliper Adjusting Mechanism Kit
1- T131	Screw
2- T132	Adjuster Pin
3- T134	Retainer
4- Y12	Spring
5- T135	Clutch
6- SK7	Snap Ring
7- T252	Washer
8- Y45	Spring
9- S86	Washer
10- S87	Washer
11- S88	Washer

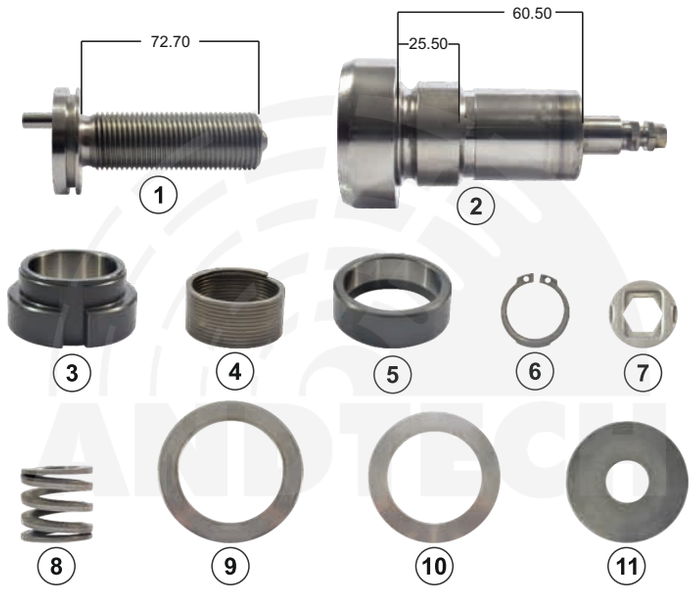

ANDTECH No :	0810 30108
Org. Ref. No :	
Application :	17.5
Description :	Caliper Adjusting Mechanism
1- T25	Screw
2- T132	Adjusting Pin
3- T134	Retainer
4- Y12	Spring
5- T135	Clutch

www.andacotomotiv.com

WABCO

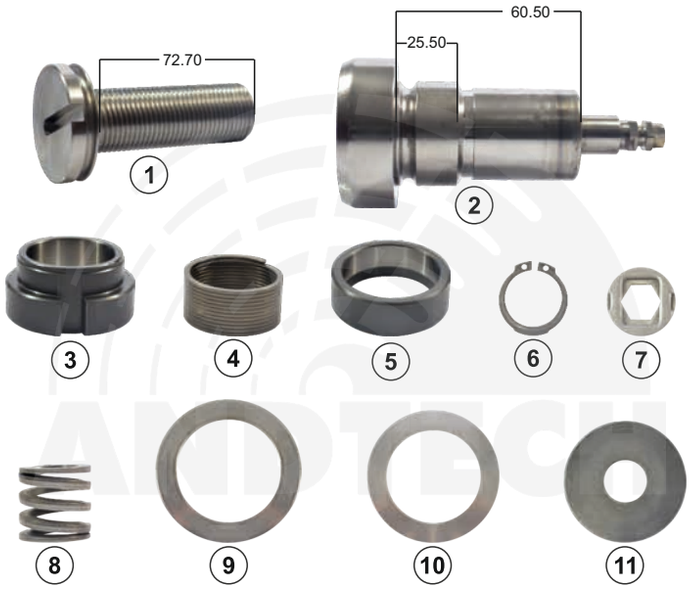

ANDTECH No :	0810 30175
Org. Ref. No :	
Application :	17.5
Description :	Caliper Adjusting Mechanism Kit
1- T25	Screw
2- T132	Adjuster Pin
3- T134	Retainer
4- Y12	Spring
5- T135	Clutch
6- SK7	Snap Ring
7- T252	Washer
8- Y45	Spring
9- S86	Washer
10- S87	Washer
11- S88	Washer

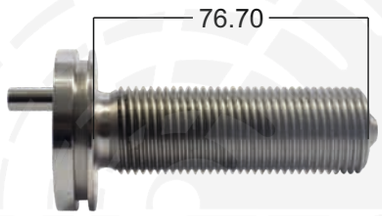

ANDTECH No :	0810 30109
Org. Ref. No :	
Application :	19.5 - 22.5
Description :	Caliper Calibration Bolt
1- T196	Screw

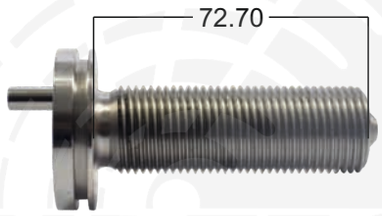

ANDTECH No :	0810 30110
Org. Ref. No :	
Application :	17.5
Description :	Caliper Calibration Bolt
1- T131	Screw

www.andacotomotiv.com

All original numbers, marks and models from vehicle manufacturers listed in this catalogue are for comparison purposes only, and may not be used in invoices.

WABCO

ANDTECH No :	0810 30111
Org. Ref. No :	
Application :	17.5
Description :	Caliper Calibration Bolt (Slotted)
1- T25	Screw

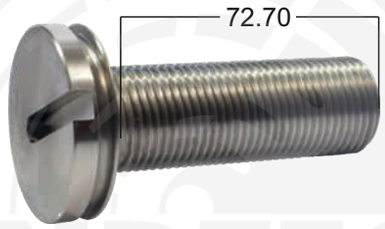

ANDTECH No :	0810 30112
Org. Ref. No :	
Application :	17.5 - 19.5 - 22.5
Description :	Caliper Lever
1- T251	Lever

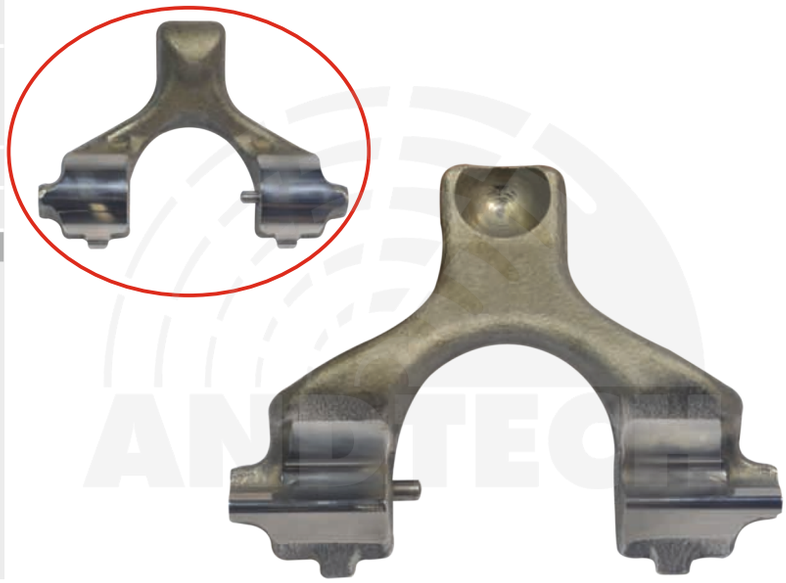

ANDTECH No :	0810 30176
Org. Ref. No :	
Application :	17.5 - 19.5 - 22.5
Description :	Caliper Lever
1- T251	Lever
2- Y44	Spring

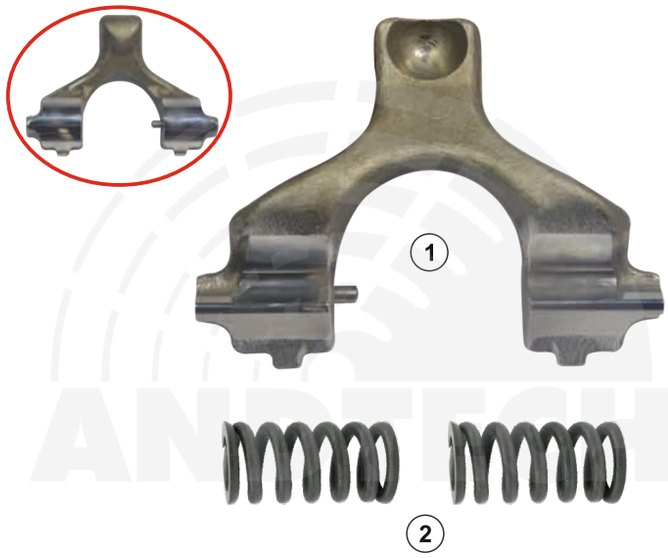

www.andacotomotiv.com

All original numbers, marks and models from vehicle manufacturers listed in this catalogue are for comparison purposes only, and may not be used in invoices.

WABCO

ANDTECH No :	0810 30113
Org. Ref. No :	
Application :	17.5 - 19.5 - 22.5
Description :	Caliper Roller Bearing
1- R13	Roller Bearing

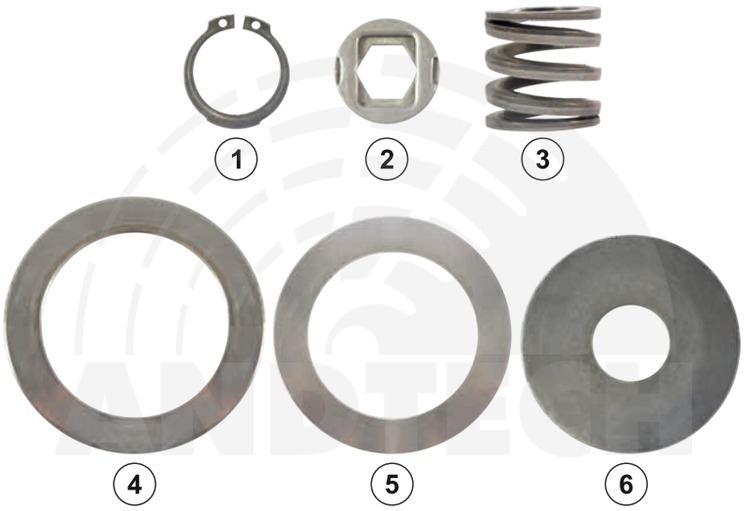

ANDTECH No :	0810 30114
Org. Ref. No :	
Application :	17.5 - 19.5 - 22.5
Description :	Caliper Repair Kit
1- SK7	Snap Ring
2- T252	Washer
3- Y45	Spring
4- S86	Washer
5- S87	Washer
6- S88	Washer

ANDTECH No :	0810 30115
Org. Ref. No :	12999729VT - 81508006023 - 082139200 - 11015566 - 1517354
Application :	1000 VG
Description :	Caliper Repair Kit
1- T140	Guide Pin Ø25x81mm
2- T141	Guide Pin Ø25x81mm
3- C25	Screw M12x1,5x90mm
4- K62	Boot
5- B24	Bush (28x15mm)
6- K63	Boot
7- K64	O-Ring
8- K65	Seal
9- K66	Dust Cover
10- T142	Metal Tap
11- C26	Screw M6x1x20mm
12- Y13	Spring

www.andacotomotiv.com

All original numbers, marks and models from vehicle manufacturers listed in this catalogue are for comparison purposes only, and may not be used in invoices.

WABCO

ANDTECH No :	0810 30116
Org. Ref. No :	
Application :	19.5 - 22.5
Description :	Caliper Repair Kit Complete
1-T30	Guide Pin Ø38x118mm
2-C10	Screw M16x1,5x120mm
3-T31	Guide Pin Ø38x76mm
4-C3	Screw M16x1,5x80mm
5-S15	Metal Ring
6-K17	Boot
7-K18	Boot
8-K19	Rubber Tap
9-K20	Seal
10-S5	Metal Tap (42x18mm)
11-S4	Metal Tap (42x26mm)
12-B6	Bush (42x30mm)
13-T261	Adjusting Mechanism
14-Y44	Spring
15-R13	Roller Bearing
16-T251	Lever

www.andacotomotiv.com

WABCO

ANDTECH No :	0810 30117
Org. Ref. No :	
Application :	19.5 - 22.5
Description :	Caliper Repair Kit Complete
1- T30	Guide Pin Ø38x118mm
2- C10	Screw M16x1,5x120mm
3- T31	Guide Pin Ø38x76mm
4- C3	Screw M16x1,5x80mm
5- S15	Metal Ring
6- K17	Boot
7- K18	Boot
8- K19	Rubber Tap
9- K20	Seal
10- S5	Metal Tap (42x18mm)
11- S4	Metal Tap (42x26mm)
12- B6	Bush (42x30mm)
13- T261	Adjusting Mechanism
14- Y44	Spring

ANDTECH No :	0810 30177
Org. Ref. No :	
Application :	19.5 - 22.5
Description :	Caliper Repair Kit Complete
1- T30	Guide Pin Ø38x118mm
2- C10	Screw M16x1,5x120mm
3- T31	Guide Pin Ø38x76mm
4- C3	Screw M16x1,5x80mm
5- S15	Metal Ring
6- T24	Adjusting Mechanism
7- K19	Rubber Tap
8- K17	Boot
9- K18	Boot
10- S5	Metal Tap (42x18mm)
11- S4	Metal Tap (42x26mm)
12- B6	Bush (42x30mm)
13- SK7	Snap Ring
14- T252	Washer
15- Y45	Spring
16- S86	Washer
17- S87	Washer
18- S88	Washer

www.andacotomotiv.com

All original numbers, marks and models from vehicle manufacturers listed in this catalogue are for comparison purposes only, and may not be used in invoices.

WABCO

ANDTECH No :	0810 30118
Org. Ref. No :	
Application :	19.5 - 22.5
Description :	Caliper Repair Kit Complete
1- T30	Guide Pin Ø38x118mm
2- C10	Screw M16x1,5x120mm
3- T31	Guide Pin Ø38x76mm
4- C3	Screw M16x1,5x80mm
5- S15	Metal Ring
6- T24	Adjusting Mechanism
7- K19	Rubber Tap
8- K17	Boot
9- K18	Boot
10- S5	Metal Tap (42x18mm)
11- S4	Metal Tap (42x26mm)
12- B6	Bush (42x30mm)

ANDTECH No :	0810 30178
Org. Ref. No :	
Application :	19.5 - 22.5
Description :	Caliper Repair Kit Complete
1- T30	Guide Pin Ø38x118mm
2- C10	Screw M16x1,5x120mm
3- T31	Guide Pin Ø38x76mm
4- C3	Screw M16x1,5x80mm
5- S15	Metal Ring
6- T24	Adjusting Mechanism
7- K19	Rubber Tap
8- K17	Boot
9- K18	Boot
10- K22	Boot (White)
11- B6	Bush (42x30mm)
12- S5	Metal Tap (42x18mm)
13- S4	Metal Tap (42x26mm)
14- SK7	Snap Ring
15- T252	Washer
16- Y45	Spring
17- S86	Washer
18- S87	Washer
19- S88	Washer

www.andacotomotiv.com

WABCO

ANDTECH No :	0810 30179
Org. Ref. No :	
Application :	19.5 - 22.5
Description :	Caliper Repair Kit Complete
1- T30	Guide Pin Ø38x118mm
2- C10	Screw M16x1,5x120mm
3- T31	Guide Pin Ø38x76mm
4- C3	Screw M16x1,5x80mm
5- S15	Metal Ring
6- T24	Adjusting Mechanism
7- K19	Rubber Tap
8- K17	Boot
9- K18	Boot
10- K22	Boot (white)
11- B6	Bush (42x30mm)
12- S5	Metal Tap (42x18mm)
13- S4	Metal Tap (42x26mm)
14- SK7	Snap Ring
15- T252	Washer
16- Y45	Spring
17- S86	Washer
18- S87	Washer
19- S88	Washer

ANDTECH No :	0810 30119
Org. Ref. No :	
Application :	19.5 - 22.5
Description :	Caliper Repair Kit Complete
1- T30	Guide Pin Ø38x118mm
2- C10	Screw M16x1,5x120mm
3- T31	Guide Pin Ø38x76mm
4- C3	Screw M16x1,5x80mm
5- S15	Metal Ring
6- T24	Adjusting Mechanism
7- K19	Rubber Tap
8- K17	Boot
9- K18	Boot
10- K22	Boot (White)
11- B6	Bush (42x30mm)
12- S5	Metal Tap (42x18mm)
13- S4	Metal Tap (42x26mm)

www.andacotomotiv.com

All original numbers, marks and models from vehicle manufacturers listed in this catalogue are for comparison purposes only, and may not be used in invoices.

WABCO

ANDTECH No :	0810 30120
Org. Ref. No :	12999738VT - 1505890 - 3434382701 - 79787365 - 6402259212
Application :	19.5 - 22.5
Description :	Caliper Repair Kit
1- T30	Guide Pin Ø38x118mm
2- C10	Screw M16x1,5x120mm
3- T31	Guide Pin Ø38x76mm
4- C3	Screw M16x1,5x80mm
5- S15	Metal Ring
6- K19	Rubber Tap
7- S5	Metal Tap (42x18mm)
8- S4	Metal Tap (42x26mm)
9- K17	Boot
10- K18	Boot
11- K22	Boot (White)
12- B6	Bush (42x30mm)

ANDTECH No :	0810 30121
Org. Ref. No :	
Application :	19.5 - 22.5
Description :	Caliper Repair Kit
1- T30	Guide Pin Ø38x118mm
2- C10	Screw M16x1,5x120mm
3- T31	Guide Pin Ø38x76mm
4- C3	Screw M16x1,5x80mm
5- S15	Metal Ring
6- K19	Rubber Tap
7- S5	Metal Tap (42x18mm)
8- S4	Metal Tap (42x26mm)
9- K17	Boot
10- K18	Boot
11- K22	Boot (White)
12- B6	Bush (42x30mm)

ANDTECH No :	0810 30122
Org. Ref. No :	12999776 - 34344382800 - 1628065 - 1068119 - 6500700 - 501866626 - 85108166
Application :	19.5 - 22.5
Description :	Caliper Repair Kit
1- T30	Guide Pin Ø38x118mm
2- C10	Screw M16x1,5x120mm
3- T31	Guide Pin Ø38x76mm
4- C3	Screw M16x1,5x80mm
5- S15	Metal Ring
6- K17	Boot
7- K18	Boot
8- K19	Rubber Tap
9- S5	Metal Tap (42x18mm)
10- S4	Metal Tap (42x26mm)
11- B6	Bush (42x30mm)

www.andacotomotiv.com

WABCO

ANDTECH No :	0810 30123
Org. Ref. No :	6402259212 - 640 225 921 2
Application :	19.5 - 22.5
Description :	Caliper Repair Kit
1- T30	Guide Pin Ø38x118mm
2- C10	Screw M16x1,5x120mm
3- T31	Guide Pin Ø38x76mm
4- C3	Screw M16x1,5x80mm
5- S15	Metal Ring
6- K17	Boot
7- K18	Boot
8- K19	Rubber Tap
9- S5	Metal Tap (42x18mm)
10- S4	Metal Tap (42x26mm)
11- B6	Bush (42x30mm)

ANDTECH No :	0810 30124
Org. Ref. No :	12999678VT - 5021170488 - 0865966
Application :	19.5 - 22.5
Description :	Caliper Repair Kit
1- T30	Guide Pin Ø38x118mm
2- C10	Screw M16x1,5x120mm
3- T31	Guide Pin Ø38x76mm
4- C3	Screw M16x1,5x80mm
5- S15	Metal Ring
6- K22	Boot (White)
7- K18	Boot
8- K19	Rubber Tap
9- S5	Metal Tap
10- S4	Metal Tap
11- B6	Bush

ANDTECH No :	0810 30125
Org. Ref. No :	12999746VT - 1440505 - 5001858722 - 261112999746VT
Application :	19.5
Description :	Caliper Repair Kit
1- T30	Guide Pin Ø38x118mm
2- C10	Screw M16x1,5x120mm
3- T31	Guide Pin Ø38x76mm
4- C3	Screw M16x1,5x80mm
5- S15	Metal Ring
6- K22	Boot (White)
7- K59T136	Tappet and Boot
8- SK6	Snap Ring
9- K19	Rubber Tap
10- S5	Metal Tap (42x18mm)
11- S4	Metal Tap (42x26mm)
12- B6	Bush (42x30mm)

www.andacotomotiv.com

All original numbers, marks and models from vehicle manufacturers listed in this catalogue are for comparison purposes only, and may not be used in invoices.

WABCO

ANDTECH No :	0810 30180
Org. Ref. No :	12999677VT - 5021170487 - 0865965
Application :	19.5
Description :	Caliper Repair Kit
1- C10	Screw M16x1,5x120mm
2- C3	Screw M16x1,5x80mm
3- S15	Metal Ring
4- K22	Boot (White)
5- K59T136	Tappet and Boot
6- SK6	Snap Ring
7- K19	Rubber Tap
8- S5	Metal Tap (42x18mm)
9- S4	Metal Tap (42x26mm)

ANDTECH No :	0810 30126
Org. Ref. No :	
Application :	19.5
Description :	Caliper Repair Kit
1- K59T136	Tappet and Boot
2- SK6	Snap Ring
3- K22	Boot (White)
4- S15	Metal Ring

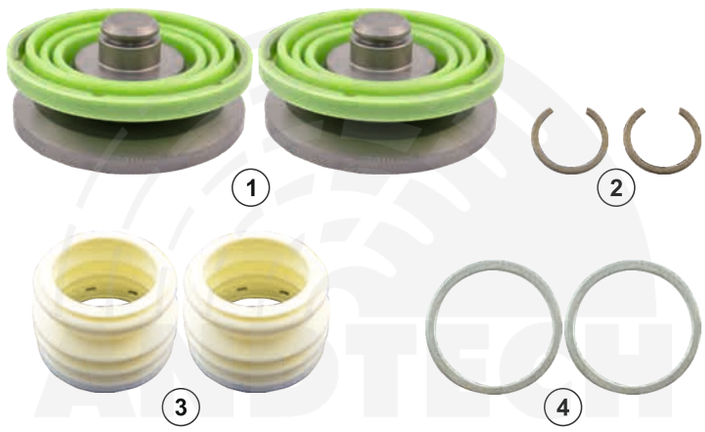

ANDTECH No :	0810 30127
Org. Ref. No :	
Application :	19.5
Description :	Caliper Tappet Repair Kit
1- K59T136	Tappet and Boot
2- SK6	Snap Ring

www.andacotomotiv.com

WABCO

ANDTECH No :	0810 30181
Org. Ref. No :	
Application :	19.5 - 22.5
Description :	Caliper Repair Kit
1- K17	Boot
2- K18	Boot
3- K22	Boot (White)
4- S4	Metal Tap (42x26mm)
5- S5	Metal Tap (42x18mm)
6- S15	Metal Ring
7- B6	Bush (42x30mm)

ANDTECH No :	0810 30128
Org. Ref. No :	
Application :	19.5 - 22.5
Description :	Caliper Repair Kit
1- K17	Boot
2- K18	Boot
3- K22	Boot (White)
4- S4	Metal Tap (42x26mm)
5- S5	Metal Tap (42x18mm)
6- S15	Metal Ring
7- B6	Bush (42x30mm)

ANDTECH No :	0810 30129
Org. Ref. No :	
Application :	19.5 - 22.5
Description :	Caliper Repair Kit
1- K17	Boot
2- S15	Metal Ring
3- K18	Boot
4- S4	Metal Tap (42x26mm)
5- S5	Metal Tap (42x18mm)
6- B6	Bush (42x30mm)

www.andacotomotiv.com

All original numbers, marks and models from vehicle manufacturers listed in this catalogue are for comparison purposes only, and may not be used in invoices.

WABCO

ANDTECH No :	0810 30130
Org. Ref. No :	
Application :	19.5 - 22.5
Description :	Caliper Repair Kit
1- K22	Boot (White)
2- S15	Metal Ring
3- K18	Boot
4- S4	Metal Tap (42x26mm)
5- S5	Metal Tap (42x18mm)
6- B6	Bush (42x30mm)

ANDTECH No :	0810 30131
Org. Ref. No :	
Application :	19.5 - 22.5
Description :	Caliper Repair Kit
1- K22	Boot (White)
2- K17	Boot
3- K18	Boot
4- S4	Metal Tap (42x26mm)
5- S5	Metal Tap (42x18mm)
6- S15	Metal Ring

ANDTECH No :	0810 30132
Org. Ref. No :	
Application :	19.5 - 22.5
Description :	Caliper Boot Kit
1- K17	Boot
2- K18	Boot
3- S15	Metal Ring

www.andacotomotiv.com

WABCO

ANDTECH No :	0810 30133
Org. Ref. No :	
Application :	19.5 - 22.5
Description :	Caliper Boot Kit
1- K22	Boot (White)
2- K18	Boot
3- S15	Metal Ring

ANDTECH No :	0810 30260
Org. Ref. No :	
Application :	19.5 - 22.5
Description :	Caliper Boot Kit
1- K146	Boot

ANDTECH No :	0810 30134
Org. Ref. No :	
Application :	19.5 - 22.5
Description :	Caliper Repair Kit
1- T30	Guide Pin Ø38x118mm
2- C10	Screw M16x1,5x120mm
3- T31	Guide Pin Ø38x76mm
4- C3	Screw M16x1,5x80mm
5- B6	Bush (42x30mm)

ANDTECH No :	0810 30135
Org. Ref. No :	
Application :	19.5 - 22.5
Description :	Caliper Repair Kit
1- T30	Guide Pin Ø38x118mm
2- C10	Screw M16x1,5x120mm
3- T31	Guide Pin Ø38x76mm
4- C3	Screw M16x1,5x80mm
5- C15	Screw M10x1x40mm

www.andacotomotiv.com

All original numbers, marks and models from vehicle manufacturers listed in this catalogue are for comparison purposes only, and may not be used in invoices.

WABCO

ANDTECH No :	0810 30136
Org. Ref. No :	
Application :	17.5
Description :	Caliper Repair Kit
1- T21	Guide Pin Ø29x91mm
2- C2	Screw M16x1,5x87mm
3- T22	Guide Pin Ø29x77mm
4- C8	Screw M16x1,5x70mm
5- K18	Boot
6- K16	Boot
7- B5	Bush (34x25mm)
8- S9	Metal Tap (34x17mm)
9- K19	Rubber Tap
10- K20	Seal
11- T262	Adjusting Mechanism
12- Y44	Spring
13- R13	Roller Bearing
14- T251	Lever

ANDTECH No :	0810 30137
Org. Ref. No :	
Application :	17.5
Description :	Caliper Repair Kit
1- T21	Guide Pin Ø29x91mm
2- C2	Screw M16x1,5x87mm
3- T22	Guide Pin Ø29x77mm
4- C8	Screw M16x1,5x70mm
5- K18	Boot
6- K16	Boot
7- B5	Bush (34x25mm)
8- S9	Metal Tap (34x17mm)
9- K19	Rubber Tap
10- K20	Seal
11- T262	Adjusting Mechanism
12- Y44	Spring

www.andacotomotiv.com

WABCO

ANDTECH No :	0810 30182
Org. Ref. No :	
Application :	17.5
Description :	Caliper Repair Kit
1- T21	Guide Pin Ø29X91mm
2- C2	Screw M16x1,5x87mm
3- T22	Guide Pin Ø29X77mm
4- C8	Screw M16X1,5X70mm
5- K18	Boot
6- K16	Boot
7- B5	Bush (34x25mm)
8- S9	Metal Tap (34x17mm)
9- K19	Rubber Tap
10- T23	Adjusting Mechanism
11- SK7	Snap Ring
12- T252	Washer
13- Y45	Spring
14- S86	Washer
15- S87	Washer
16- S88	Washer

ANDTECH No :	0810 30138
Org. Ref. No :	
Application :	17.5
Description :	Caliper Repair Kit
1- T21	Guide Pin Ø29x91mm
2- C2	Screw M16x1,5x87mm
3- T22	Guide Pin Ø29x77mm
4- C8	Screw M16x1,5x70mm
5- K18	Boot
6- K16	Boot
7- B5	Bush (34x25mm)
8- S9	Metal Tap (34x17mm)
9- K19	Rubber Tap
10- T23	Adjusting Mechanism

www.andacotomotiv.com

All original numbers, marks and models from vehicle manufacturers listed in this catalogue are for comparison purposes only, and may not be used in invoices.

WABCO

ANDTECH No :	0810 30139
Org. Ref. No :	
Application :	17.5
Description :	Caliper Repair Kit
1- T21	Guide Pin Ø29x91mm
2- C2	Screw M16x1,5x87mm
3- T22	Guide Pin Ø29x77mm
4- C8	Screw M16x1,5x70mm
5- K18	Boot
6- K16	Boot
7- B5	Bush (34x25mm)
8- S9	Metal Tap (34x17mm)
9- K19	Rubber Tap
10- K20	Seal
11- T263	Adjusting Mechanism
12- Y44	Spring
13- R13	Roller Bearing
14- T251	Lever

ANDTECH No :	0810 30140
Org. Ref. No :	
Application :	17.5
Description :	Caliper Repair Kit
1- T21	Guide Pin Ø29x91mm
2- C2	Screw M16x1,5x87mm
3- T22	Guide Pin Ø29x77mm
4- C8	Screw M16x1,5x70mm
5- K18	Boot
6- K16	Boot
7- B5	Bush (34x25mm)
8- S9	Metal Tap (34x17mm)
9- K19	Rubber Tap
10- K20	Seal
11- T263	Adjusting Mechanism
12- Y44	Spring

www.andacotomotiv.com

All original numbers, marks and models from vehicle manufacturers listed in this catalogue are for comparison purposes only, and may not be used in invoices.

WABCO

ANDTECH No :	0810 30183
Org. Ref. No :	
Application :	17.5
Description :	Caliper Repair Kit
1- T21	Guide Pin Ø29x91mm
2- C2	Screw M16x1,5x87mm
3- T22	Guide Pin Ø29x77mm
4- C8	Screw M16x1,5x70mm
5- K18	Boot
6- K16	Boot
7- B5	Bush (34x25mm)
8- S9	Metal Tap (34x17mm)
9- K19	Rubber Tap
10- T253	Adjusting Mechanism
11- SK7	Snap Ring
12- T252	Washer
13- Y45	Spring
14- S86	Washer
15- S87	Washer
16- S88	Washer

ANDTECH No :	0810 30141
Org. Ref. No :	
Application :	17.5
Description :	Caliper Repair Kit
1- T21	Guide Pin Ø29x91mm
2- C2	Screw M16x1,5x87mm
3- T22	Guide Pin Ø29x77mm
4- C8	Screw M16x1,5x70mm
5- K18	Boot
6- K16	Boot
7- B5	Bush (34x25mm)
8- S9	Metal Tap (34x17mm)
9- K19	Rubber Tap
10- T253	Adjusting Mechanism

www.andacotomotiv.com

All original numbers, marks and models from vehicle manufacturers listed in this catalogue are for comparison purposes only, and may not be used in invoices.

WABCO

ANDTECH No :	0810 30142
Org. Ref. No :	
Application :	17.5
Description :	Caliper Repair Kit
1- T21	Guide Pin Ø29x91mm
2- C2	Screw M16x1,5x87mm
3- T22	Guide Pin Ø29x77mm
4- C8	Screw M16x1,5x70mm
5- K21	Gasket
6- K18	Boot
7- K16	Boot
8- K19	Rubber Tap
9- S9	Metal Tap (34x17mm)
10- K20	Seal
11- B5	Bush (34x25mm)
12- C15	Screw M10x1x40mm

ANDTECH No :	0810 30143
Org. Ref. No :	12999699VT - 12999702 - 1436853 - 42536957
Application :	17.5
Description :	Caliper Repair Kit
1- T21	Guide Pin Ø29x91mm
2- C2	Screw M16x1,5x87mm
3- T22	Guide Pin Ø29x77mm
4- C8	Screw M16x1,5x70mm
5- K18	Boot
6- K16	Boot
7- B5	Bush (34x25mm)
8- S9	Metal Tap (34x17mm)
9- K19	Rubber Tap

ANDTECH No :	0810 30144
Org. Ref. No :	12999704VT - 5001852880 - 1519363 - 261112999704VT
Application :	17.5
Description :	Caliper Repair Kit
1- K16	Boot
2- C2	Screw M16x1,5x87mm
3- B5	Bush (34x25mm)
4- K19	Rubber Tap
5- K18	Boot
6- C8	Screw M16x1,5x70mm
7- S9	Metal Tap (34x17mm)

www.andacotomotiv.com

WABCO

ANDTECH No :	0810 30145
Org. Ref. No :	12999580VT - 81508226003 - 1517407
Application :	17.5
Description :	Caliper Repair Kit
1- K16	Boot
2- K18	Boot
3- B5	Bush (34x25mm)
4- S9	Metal Tap (34x17mm)
5- C15	Screw M10x1x40mm
6- C2	Screw M16x1,5x87mm
7- C8	Screw M16x1,5x70mm
8- K20	Seal
9- K19	Rubber Tap
10- K21	Gasket

ANDTECH No :	0810 30146
Org. Ref. No :	
Application :	17.5
Description :	Caliper Repair Kit
1- K16	Boot
2- K18	Boot
3- B5	Bush (34x25mm)
4- S9	Metal Tap (34x17mm)

ANDTECH No :	0810 30147
Org. Ref. No :	6401759202
Application :	17.5
Description :	Caliper Boot Kit
1- K16	Boot
2- K18	Boot

www.andacotomotiv.com

All original numbers, marks and models from vehicle manufacturers listed in this catalogue are for comparison purposes only, and may not be used in invoices.

WABCO

ANDTECH No :	0810 30148
Org. Ref. No :	
Application :	17.5
Description :	Caliper Repair Kit
1- T21	Guide Pin Ø29x91mm
2- C2	Screw M16x1,5x87mm
3- T22	Guide Pin Ø29x77mm
4- C8	Screw M16x1,5x70mm
5- C15	Screw M10x1x40mm

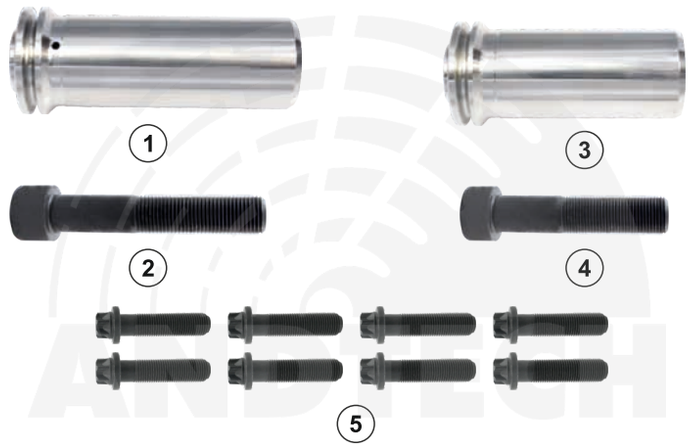

ANDTECH No :	0810 30149
Org. Ref. No :	
Application :	17.5
Description :	Caliper Repair Kit
1- T21	Guide Pin Ø29x91mm
2- C2	Screw M16x1,5x87mm
3- T22	Guide Pin Ø29x77mm
4- C8	Screw M16x1,5x70mm
5- B5	Bush (34x25mm)

ANDTECH No :	0810 30193
Org. Ref. No :	
Application :	17.5
Description :	Caliper Repair Kit
1- K18	Boot
2- K19	Rubber Tap
3- K20	Seal
4- S130	Metal Cap (34x17mm)
5- S131	Metal Cap (34x42mm)
6- K16	Boot

ANDTECH No :	0810 30194
Org. Ref. No :	
Application :	17.5
Description :	Caliper Repair Kit
1- S130	Metal Cap (34x17mm)
2- S131	Metal Cap (34x42mm)

www.andacotomotiv.com

All original numbers, marks and models from vehicle manufacturers listed in this catalogue are for comparison purposes only, and may not be used in invoices.

WABCO

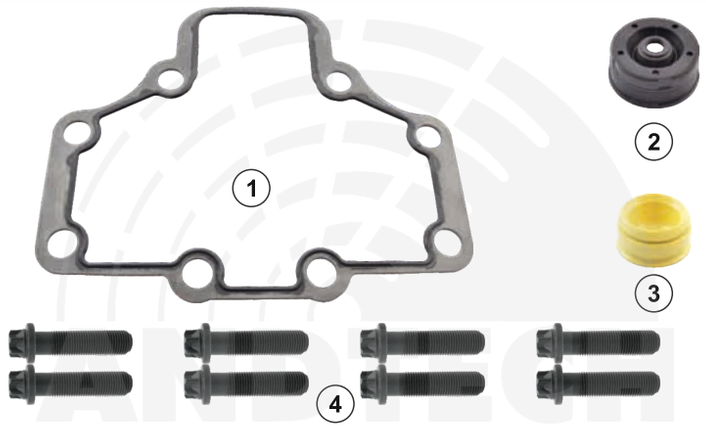

ANDTECH No :	0810 30150
Org. Ref. No :	
Application :	17.5 - 19.5 - 22.5
Description :	Caliper Gasket Kit
1- K21	Gasket
2- K20	Seal
3- K19	Rubber Tap
4- C15	Screw M10x1x40mm

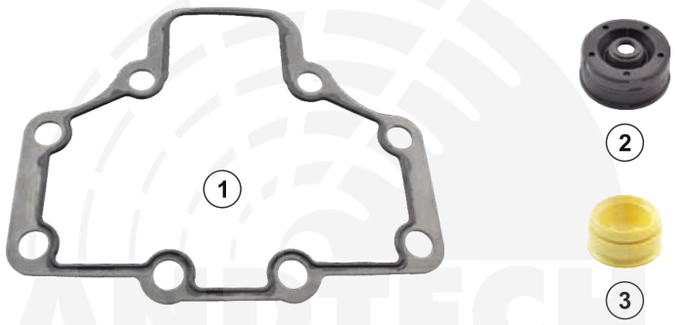

ANDTECH No :	0810 30151
Org. Ref. No :	
Application :	17.5 - 19.5 - 22.5
Description :	Caliper Repair Kit
1- K21	Gasket
2- K20	Seal
3- K19	Rubber Tap

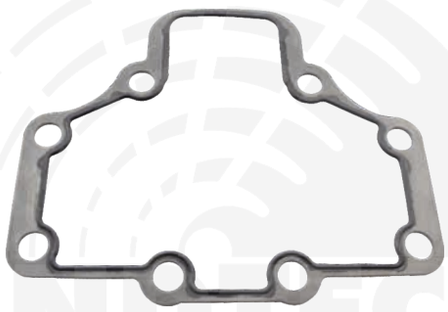

ANDTECH No :	0810 30152
Org. Ref. No :	
Application :	17.5 - 19.5 - 22.5
Description :	Caliper Gasket
1- K21	Gasket

ANDTECH No :	0810 30222
Org. Ref. No :	81.50822-6042 - 640 322 932 2
Application :	17.5 - 19.5 - 22.5, Maxx 22
Description :	Caliper Repair Kit
1- K18	Boot
2- K19	Rubber Tap

www.andacotomotiv.com

All original numbers, marks and models from vehicle manufacturers listed in this catalogue are for comparison purposes only, and may not be used in invoices.

WABCO

ANDTECH No :	0810 30153
Org. Ref. No :	6401759202 - 3434382900 - 0906197 - 13C3508278AB
Application :	17.5 - 19.5 - 22.5
Description :	Caliper Repair Kit
1- K18	Boot
2- K20	Seal
3- K19	Rubber Tap

ANDTECH No :	0810 30154
Org. Ref. No :	6402259262 - 640 225 926 2
Application :	22.5
Description :	Caliper Push Plate Slotted (Right)
1- T32	Push Plate Slotted

ANDTECH No :	0810 30155
Org. Ref. No :	6402259262 - 640 225 926 2
Application :	22.5
Description :	Caliper Push Plate Slotted (Left)
1- T33	Push Plate Slotted

www.andacotomotiv.com

WABCO

ANDTECH No :	0810 30156
Org. Ref. No :	6401959362 - 640 195 936 2
Application :	19.5
Description :	Caliper Push Plate Slotted (Right)
1- T202	Push Plate Slotted

ANDTECH No :	0810 30157
Org. Ref. No :	6401959362 - 640 195 936 2
Application :	19.5
Description :	Caliper Push Plate Slotted (Left)
1- T201	Push Plate Slotted

ANDTECH No :	0810 30158
Org. Ref. No :	6401759402 - 640 175 940 2
Application :	17.5
Description :	Caliper Push Plate Slotted (Right)
1- T28	Push Plate Slotted

ANDTECH No :	0810 30159
Org. Ref. No :	6401759402 - 640 175 940 2
Application :	17.5
Description :	Caliper Push Plate Slotted (Left)
1- T29	Push Plate Slotted

www.andacotomotiv.com

All original numbers, marks and models from vehicle manufacturers listed in this catalogue are for comparison purposes only, and may not be used in invoices.

WABCO

ANDTECH No :	0810 30160
Org. Ref. No :	6401759402 - 640 175 940 2
Application :	17.5
Description :	Caliper Push Plate with Pin (Right)
1- T26	Push Plate With Pin

ANDTECH No :	0810 30161
Org. Ref. No :	6401759402 - 640 175 940 2
Application :	17.5
Description :	Caliper Push Plate with Pin (Left)
1- T27	Push Plate With Pin

ANDTECH No :	0810 30184
Org. Ref. No :	
Application :	17.5
Description :	Caliper Cover Plate
1- T296	Cover Plate

INNER SIDE OUTER SIDE

ANDTECH No :	0810 30185
Org. Ref. No :	
Application :	17.5
Description :	Caliper Cover Plate
1- T297	Cover Plate

INNER SIDE OUTER SIDE

www.andacotomotiv.com

WABCO

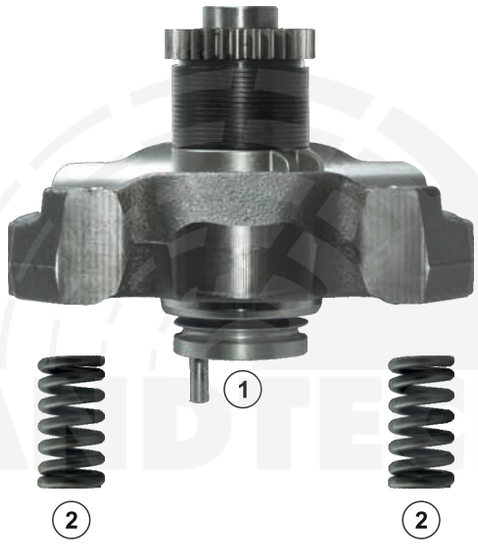

ANDTECH No :	0810 30197
Org. Ref. No :	
Application :	Maxx 22 - MAN / Mercedes
Description :	Caliper Adjusting Mechanism Complete
1- T363	Adjusting Mechanism
2- Y64	Spring

ANDTECH No :	0810 30231
Org. Ref. No :	
Application :	Maxx 22 - MAN / Mercedes
Description :	Caliper Bridge
1- T424	Bridge
2- Y64	Spring

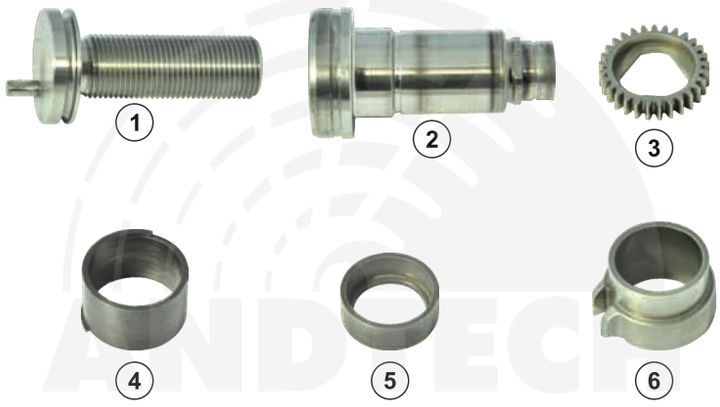

ANDTECH No :	0810 30232
Org. Ref. No :	
Application :	Maxx 22 - MAN / Mercedes
Description :	Caliper Adjusting Mechanism Kit
1- T359	Screw
2- T358	Adjuster Pin
3- T362	Adjusting Gear
4- Y63	Spring
5- T361	Clutch
6- T360	Retainer

www.andacotomotiv.com

All original numbers, marks and models from vehicle manufacturers listed in this catalogue are for comparison purposes only, and may not be used in invoices.

WABCO

ANDTECH No :	0810 30198
Org. Ref. No :	
Application :	Maxx 22 - MAN / Mercedes
Description :	Caliper Adjusting Mechanism Kit
1- T359	Screw
2- T358	Adjuster Pin
3- T362	Adjusting Gear
4- Y63	Spring
5- T361	Clutch
6- T360	Retainer
7- S145	Washer
8- SK16	Snap Ring
9- S146	Washer
10- S147	Washer
11- SK17	Snap Ring

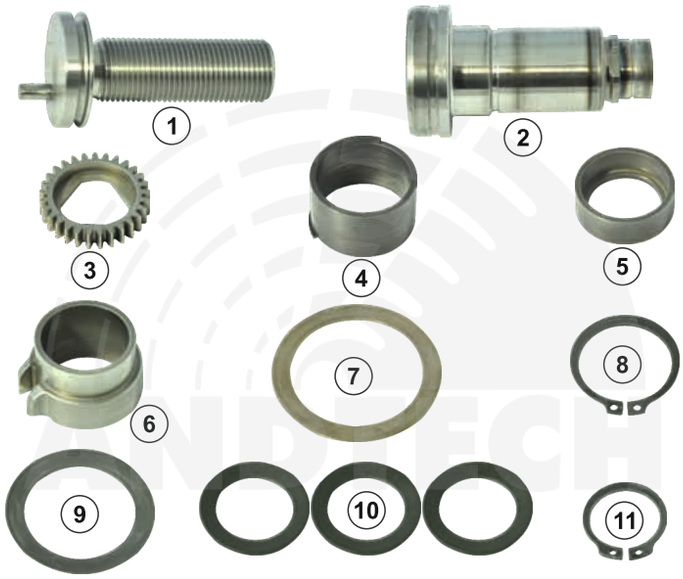

ANDTECH No :	0810 30233
Org. Ref. No :	
Application :	Maxx 22 - MAN / Mercedes
Description :	Caliper Calibration Bolt
1- T359	Screw

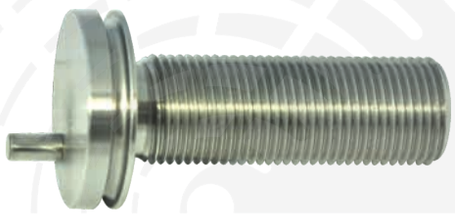

ANDTECH No :	0810 30199
Org. Ref. No :	
Application :	Maxx 22 - MAN
Description :	Caliper Lever
1- T364	Lever
2- S141	Lever Bearing
3- T365	Pin

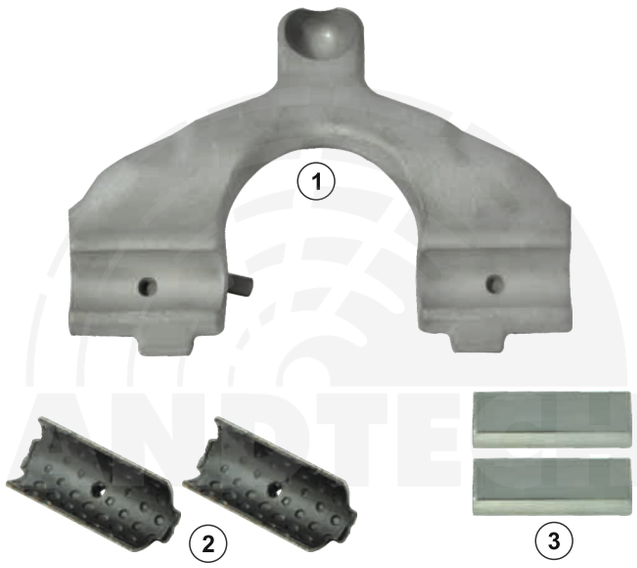

www.andacotomotiv.com

WABCO

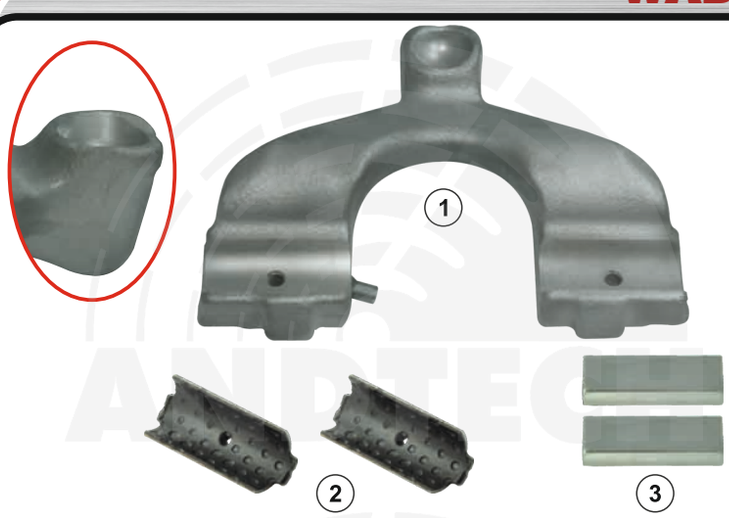

ANDTECH No :	0810 30239
Org. Ref. No :	
Application :	Maxx 22 - Mercedes
Description :	Caliper Lever
1- T574	Lever
2- S141	Lever Bearing
3- T365	Pin

ANDTECH No :	0810 30201
Org. Ref. No :	
Application :	Maxx 22 - MAN / Mercedes / Maxx 22T
Description :	Caliper Roller Bearing
1- R40	Roller Bearing

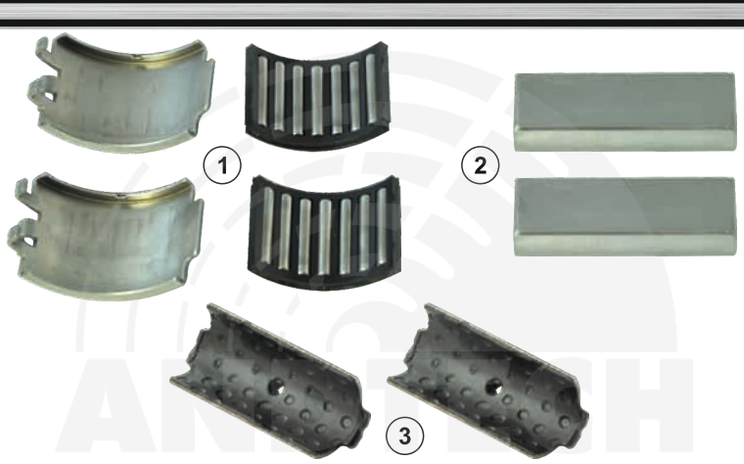

ANDTECH No :	0810 30200
Org. Ref. No :	
Application :	Maxx 22 - MAN / Mercedes / Maxx 22T
Description :	Caliper Roller Bearing Kit
1- R40	Roller Bearing
2- T365	Pin
3- S141	Lever Bearing

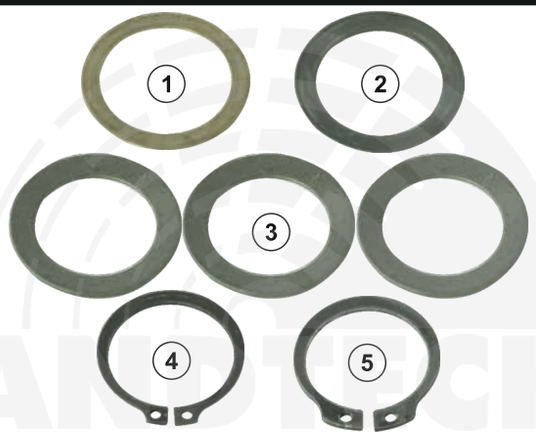

ANDTECH No :	0810 30206
Org. Ref. No :	
Application :	Maxx 22 - MAN / Mercedes
Description :	Caliper Repair Kit
1- S145	Metal Ring
2- S146	Metal Ring
3- S147	Metal Ring
4- SK16	Snap Ring
5- SK17	Snap Ring

www.andacotomotiv.com

All original numbers, marks and models from vehicle manufacturers listed in this catalogue are for comparison purposes only, and may not be used in invoices.

WABCO

ANDTECH No :	0810 30234
Org. Ref. No :	
Application :	Maxx 22 - MAN
Description :	Caliper Repair Kit Complete
1- T389	Guide Pin Ø38x118mm
2- C3	Screw M16x1,5x80mm
3- T31	Guide Pin Ø38x76mm
4- S15	Metal Ring
5- K17	Boot
6- K18	Boot
7- K19	Rubber Tap
8- K139	Seal
9- S5	Metal Tap (42x18mm)
10- B48	Bush (42x30mm)
11- T363	Adjusting Mechanism
12- Y64	Spring
13- T365	Pin
14- S141	Lever Bearing
15- R40	Roller Bearing
16- T364	Lever

www.andacotomotiv.com

WABCO

ANDTECH No :	0810 30240
Org. Ref. No :	
Application :	Maxx 22 - Mercedes
Description :	Caliper Repair Kit Complete
1- T389	Guide Pin Ø38x118mm
2- C3	Screw M16x1,5x80mm
3- T31	Guide Pin Ø38x76mm
4- S15	Metal Ring
5- K17	Boot
6- K18	Boot
7- K19	Rubber Tap
8- K139	Seal
9- S5	Metal Tap (42x18mm)
10- B48	Bush (42x30mm)
11- T363	Adjusting Mechanism
12- Y64	Spring
13- T365	Pin
14- S141	Lever Bearing
15- R40	Roller Bearing
16- T574	Lever

www.andacotomotiv.com

All original numbers, marks and models from vehicle manufacturers listed in this catalogue are for comparison purposes only, and may not be used in invoices.

WABCO

ANDTECH No :	0810 30235
Org. Ref. No :	
Application :	Maxx 22 - MAN / Mercedes
Description :	Caliper Repair Kit Complete
1- T389	Guide Pin Ø38x118mm
2- C3	Screw M16x1,5x80mm
3- T31	Guide Pin Ø38x76mm
4- S15	Metal Ring
5- K17	Boot
6- K18	Boot
7- K19	Rubber Tap
8- K139	Seal
9- S5	Metal Tap (42x18mm)
10- B48	Bush (42x30mm)
11- T363	Adjusting Mechanism
12- Y64	Spring

ANDTECH No :	0810 30236
Org. Ref. No :	
Application :	Maxx 22 - MAN / Mercedes
Description :	Caliper Repair Kit Complete
1- T389	Guide Pin Ø38x118mm
2- C3	Screw M16x1,5x80mm
3- T31	Guide Pin Ø38x76mm
4- S15	Metal Ring
5- K17	Boot
6- K18	Boot
7- K19	Rubber Tap
8- K139	Seal
9- S5	Metal Tap (42x18mm)
10- B48	Bush (42x30mm)
11- T499	Adjusting Mechanism
12- S145	Washer
13- SK16	Snap Ring
14- S146	Washer
15- S147	Washer
16- SK17	Snap Ring

www.andacotomotiv.com

All original numbers, marks and models from vehicle manufacturers listed in this catalogue are for comparison purposes only, and may not be used in invoices.

WABCO

ANDTECH No :	0810 30237
Org. Ref. No :	
Application :	Maxx 22 - MAN / Mercedes
Description :	Caliper Repair Kit Complete
1- T389	Guide Pin Ø38x118mm
2- C3	Screw M16x1,5x80mm
3- T31	Guide Pin Ø38x76mm
4- S15	Metal Ring
5- K17	Boot
6- K18	Boot
7- K19	Rubber Tap
8- K139	Seal
9- S5	Metal Tap
10- B48	Bush
11- T499	Adjusting Mechanis

ANDTECH No :	0810 30196
Org. Ref. No :	81.50822-6038 - 640 322 926 2
Application :	Maxx 22 MAN / Mercedes
Description :	Caliper Repair Kit
1- T389	Guide Pin Ø38x118mm
2- C3	Screw M16x1,5x80mm
3- T31	Guide Pin Ø38x76mm
4- K139	Seal
5- S15	Metal Ring
6- K19	Rubber Tap
7- S5	Metal Tap (42x18mm)
8- K17	Boot
9- K18	Boot
10- B48	Bush (42x30mm)

www.andacotomotiv.com

All original numbers, marks and models from vehicle manufacturers listed in this catalogue are for comparison purposes only, and may not be used in invoices.

WABCO

ANDTECH No :	0810 30202
Org. Ref. No :	81.50822-6039 - 640 322 927 2
Application :	Maxx 22 - MAN / Mercedes
Description :	Caliper Repair Kit
1- K19	Rubber Tap
2- K139	Seal
3- T366	Adjusting Gear
4- T367	Adjusting Pin

ANDTECH No :	0810 30238
Org. Ref. No :	
Application :	Maxx 22 - MAN / Mercedes / Maxx 22T
Description :	Caliper Repair Kit
1- K60	Seal

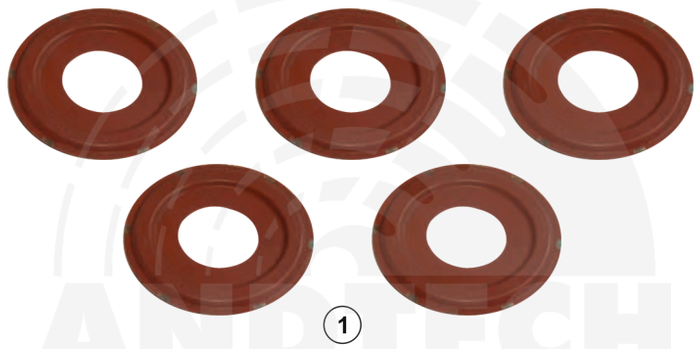

ANDTECH No :	0810 30213
Org. Ref. No :	897 290 261 2
Application :	Maxx 22 - MAN
Description :	Caliper Seal
1- K141	Seal

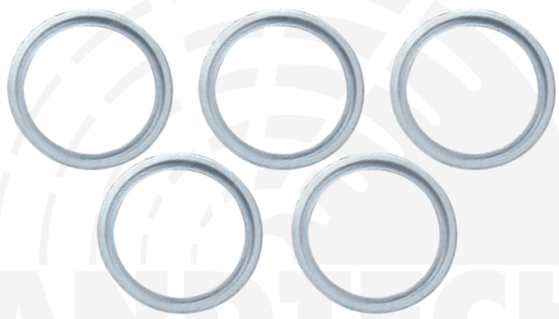

www.andacotomotiv.com

WABCO

ANDTECH No :	0810 30203
Org. Ref. No :	
Application :	Maxx 22 - MAN
Description :	Caliper Repair Kit
1- S140	Metal Cap
2- K137	Gasket

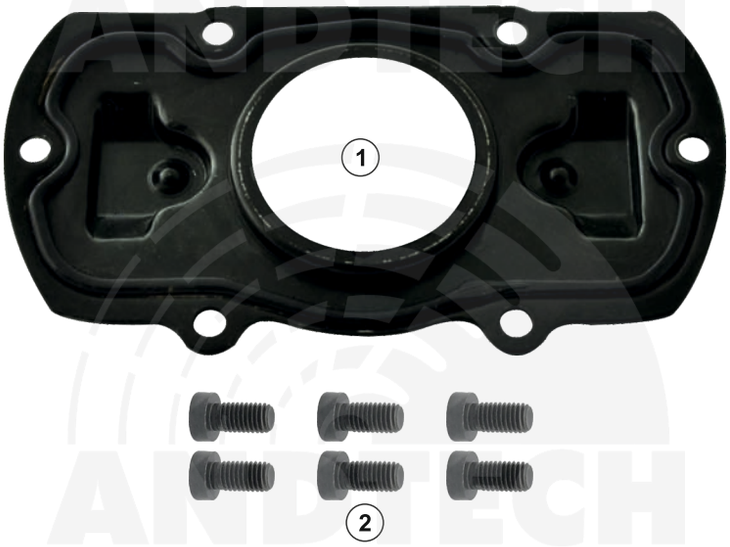

ANDTECH No :	0810 30204
Org. Ref. No :	
Application :	Maxx 22 - MAN / Mercedes
Description :	Caliper Repair Kit
1- S139	Caliper Cover
2- C7	Screw M8x16mm

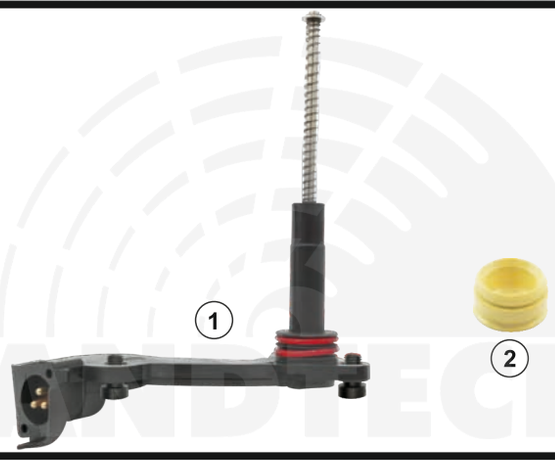

ANDTECH No :	0810 30214
Org. Ref. No :	81.50822-6040 - 640 322 928 2
Application :	Maxx 22 - MAN
Description :	Caliper Sensor Cover (3 Socket)
1- P64	Sensor Cover
2- K19	Rubber Tap

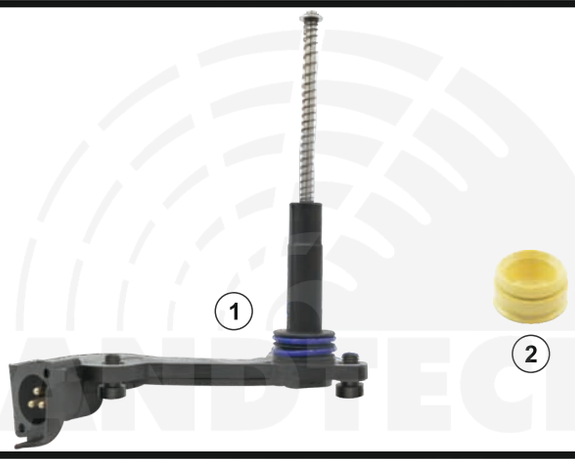

ANDTECH No :	0810 30241
Org. Ref. No :	
Application :	Maxx 22 - Mercedes
Description :	Caliper Sensor Cover (3 Socket)
1- P73	Sensor Cover
2- K19	Rubber Tap

www.andacotomotiv.com

All original numbers, marks and models from vehicle manufacturers listed in this catalogue are for comparison purposes only, and may not be used in invoices.

WABCO

ANDTECH No :	0810 30205
Org. Ref. No :	WVA 29279
Application :	Maxx 22 - MAN / Mercedes / Maxx 22T
Description :	Caliper Pad Retention Kit
1- S143	Retention Spring
2- S144	Pad Retainer
3- C72	Screw M10x12mm
4- K19	Rubber Tap

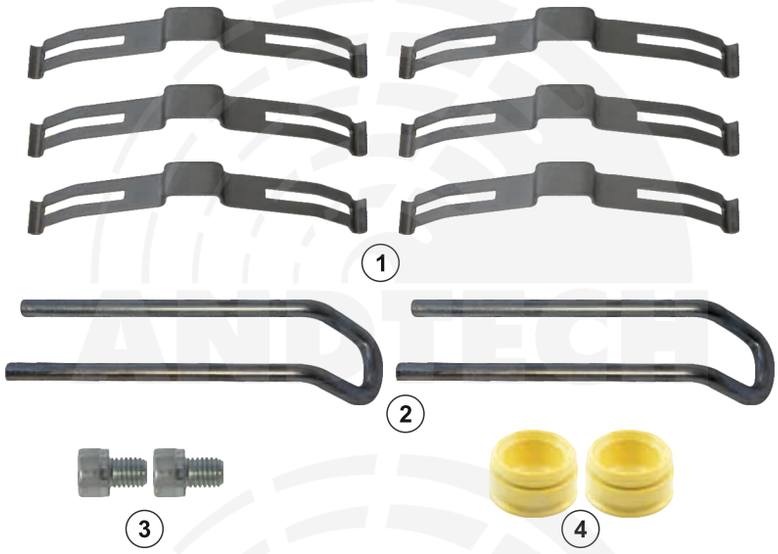

ANDTECH No :	0810 30211
Org. Ref. No :	6403229352
Application :	Maxx 22 - MAN / Mercedes / Maxx 22T
Description :	Caliper Push Plate (Right)
1- T369	Push Plate

ANDTECH No :	0810 30212
Org. Ref. No :	6403229352
Application :	Maxx 22 - MAN / Mercedes / Maxx 22T
Description :	Caliper Push Plate (Left)
1- T380	Push Plate

ANDTECH No :	0810 30207
Org. Ref. No :	81508046576 - 81508046580 - 6403220050 6403220080
Application :	Maxx 22 - MAN
Description :	Caliper Carrier (Right)
1- T373	Carrier

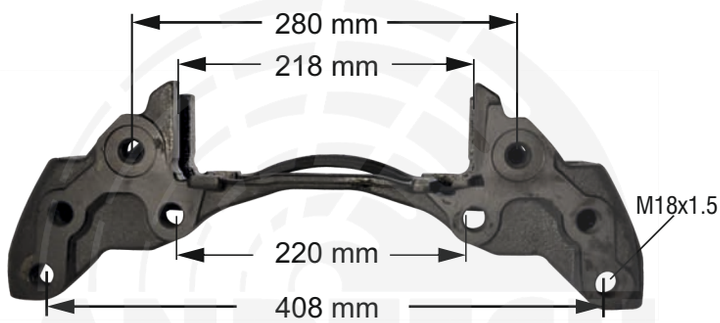

www.andacotomotiv.com

WABCO

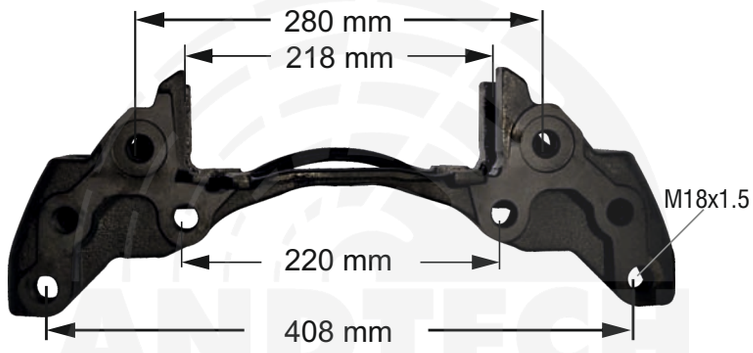

ANDTECH No :	0810 30215
Org. Ref. No :	6403220040 - 6403220070 81508046577 - 81508046581
Application :	Maxx 22 - MAN
Description :	Caliper Carrier (Left)
1- T384	Carrier 22.5”

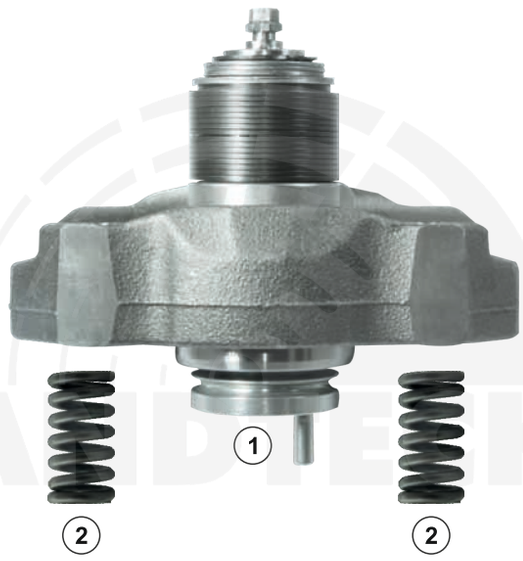

ANDTECH No :	0810 30243
Org. Ref. No :	
Application :	Maxx 22T
Description :	Caliper Adjusting Mechanism Complete
1- T581	Adjusting Mechanism
2- Y64	Spring

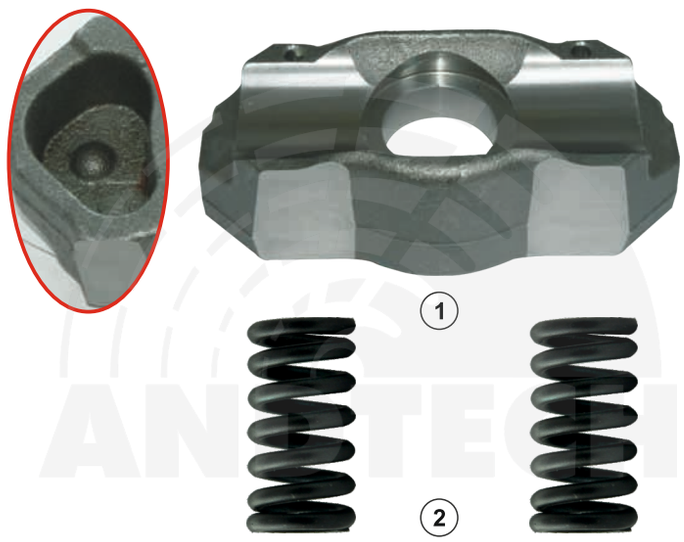

ANDTECH No :	0810 30245
Org. Ref. No :	
Application :	Maxx 22T
Description :	Caliper Bridge
1- T577	Bridge
2- Y64	Spring

www.andacotomotiv.com

All original numbers, marks and models from vehicle manufacturers listed in this catalogue are for comparison purposes only, and may not be used in invoices.

WABCO

ANDTECH No :	0810 30246
Org. Ref. No :	
Application :	Maxx 22T
Description :	Caliper Adjusting Mechanism Kit
1- T578	Screw
2- T579	Adjuster Pin
3- Y63	Spring
4- T361	Clutch
5- T360	Retainer

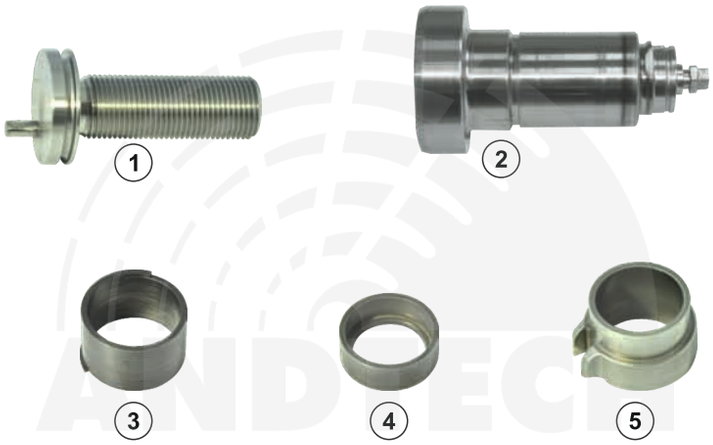

ANDTECH No :	0810 30244
Org. Ref. No :	
Application :	Maxx 22T
Description :	Caliper Adjusting Mechanism Kit
1- T578	Screw
2- T579	Adjuster Pin
3- S35	Washer
4- Y63	Spring
5- T361	Clutch
6- T360	Retainer
7- S145	Washer
8- SK16	Snap Ring
9- S146	Washer
10- S147	Washer
11- SK17	Snap Ring

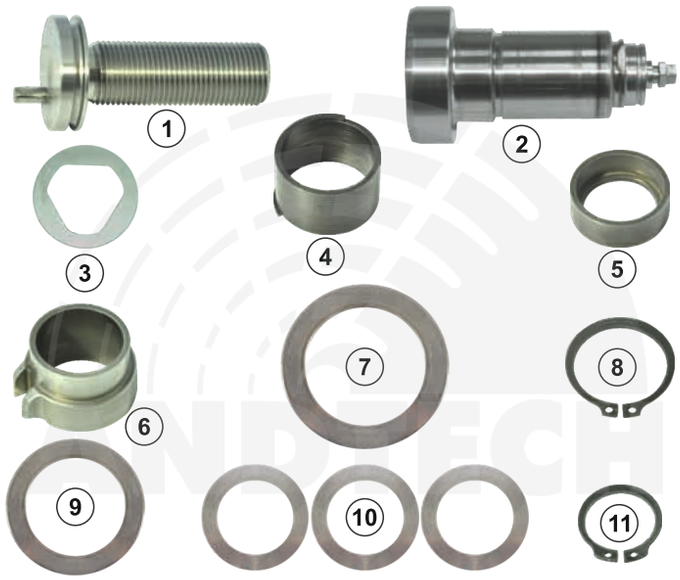

ANDTECH No :	0810 30247
Org. Ref. No :	
Application :	Maxx 22T
Description :	Caliper Calibration Bolt
1- T578	Screw

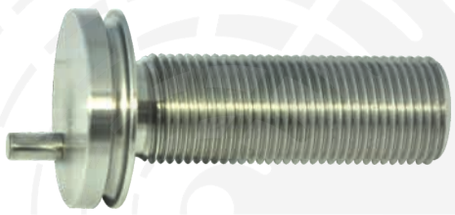

www.andacotomotiv.com

WABCO

ANDTECH No :	0810 30248
Org. Ref. No :	
Application :	Maxx 22T
Description :	Caliper Lever
1- T582	Lever
2- S141	Lever Bearing
3- T365	Pin

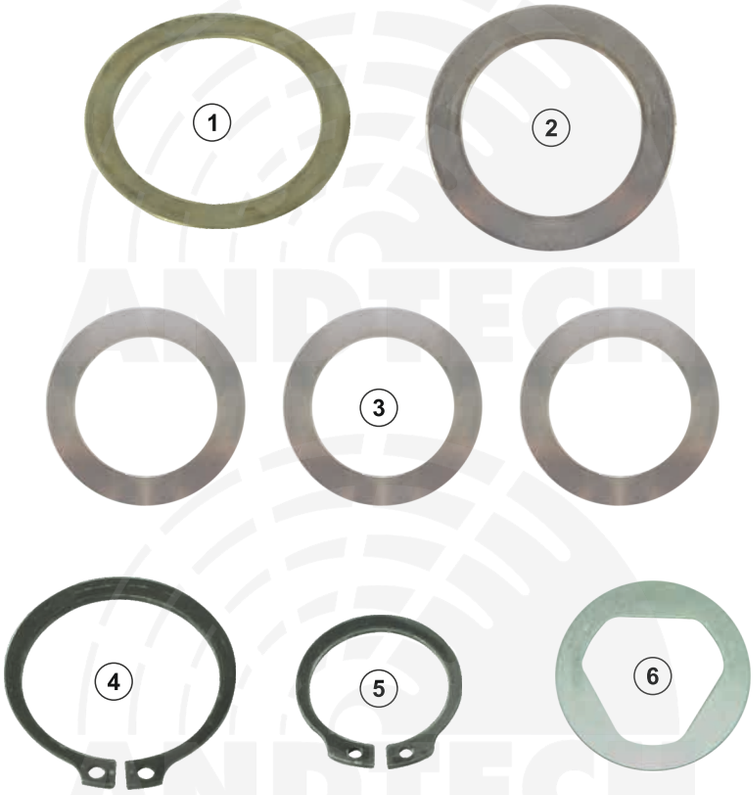

ANDTECH No :	0810 30256
Org. Ref. No :	
Application :	Maxx 22T
Description :	Caliper Repair Kit
1- S145	Metal Ring
2- S146	Metal Ring
3- S147	Metal Ring
4- SK16	Snap Ring
5- SK17	Snap Ring
6- S35	Washer

www.andacotomotiv.com

All original numbers, marks and models from vehicle manufacturers listed in this catalogue are for comparison purposes only, and may not be used in invoices.

WABCO

ANDTECH No :	0810 30249
Org. Ref. No :	
Application :	Maxx 22T
Description :	Caliper Repair Kit Complete
1- T575	Guide Pin Ø38x118mm
2- C3	Screw M16x1,5x80mm
3- T576	Guide Pin Ø38x76mm
4- K61	Boot
5- K18	Boot
6- K19	Rubber Tap
7- K20	Seal
8- S5	Metal Tap (42x18mm)
9- B6	Bush (42x30mm)
10- T581	Adjusting Mechanism
11- Y64	Spring
12- T365	Pin
13- S141	Lever Bearing
14- R40	Roller Bearing
15- T582	Lever

www.andacotomotiv.com

WABCO

ANDTECH No :	0810 30250
Org. Ref. No :	
Application :	Maxx 22T
Description :	Caliper Repair Kit Complete
1- T575	Guide Pin Ø38x118mm
2- C3	Screw M16x1,5x80mm
3- T576	Guide Pin Ø38x76mm
4- K61	Boot
5- K18	Boot
6- K19	Rubber Tap
7- K20	Seal
8- S5	Metal Tap (42x18mm)
9- B6	Bush (42x30mm)
10- T581	Adjusting Mechanism
11- Y64	Spring

ANDTECH No :	0810 30251
Org. Ref. No :	
Application :	Maxx 22T
Description :	Caliper Repair Kit Complete
1- T575	Guide Pin Ø38x118mm
2- C3	Screw M16x1,5x80mm
3- T576	Guide Pin Ø38x76mm
4- K61	Boot
5- K18	Boot
6- K19	Rubber Tap
7- K20	Seal
8- S5	Metal Tap (42x18mm)
9- B6	Bush (42x30mm)
10- T580	Adjusting Mechanism
11- S145	Washer
12- S146	Washer
13- S147	Washer
14- SK17	Snap Ring
15- SK16	Snap Ring
16- S35	Washer

www.andacotomotiv.com

All original numbers, marks and models from vehicle manufacturers listed in this catalogue are for comparison purposes only, and may not be used in invoices.

WABCO

ANDTECH No :	0810 30252
Org. Ref. No :	
Application :	Maxx 22T
Description :	Caliper Repair Kit Complete
1- T575	Guide Pin Ø38x118mm
2- C3	Screw M16x1,5x80mm
3- T576	Guide Pin Ø38x76mm
4- K61	Boot
5- K18	Boot
6- K19	Rubber Tap
7- K20	Seal
8- S5	Metal Tap (42x18mm)
9- B6	Bush (42x30mm)
10- T580	Adjusting Mechanism

ANDTECH No :	0810 30257
Org. Ref. No :	640 222 928 2 - 1199858 - 6402229282
Application :	Maxx 22T
Description :	Caliper Repair Kit Complete
1- T575	Guide Pin Ø38x118mm
2- C3	Screw M16x1,5x80mm
3- T576	Guide Pin Ø38x76mm
4- K61	Boot
5- K18	Boot
6- S5	Metal Tap (42x18mm)
7- B6	Bush (42x30mm)
8- K19	Rubber Tap

ANDTECH No :	0810 30253
Org. Ref. No :	
Application :	Maxx 22T
Description :	Caliper Repair Kit
1- S127	Caliper Cover
2- C7	Screw M8x16mm

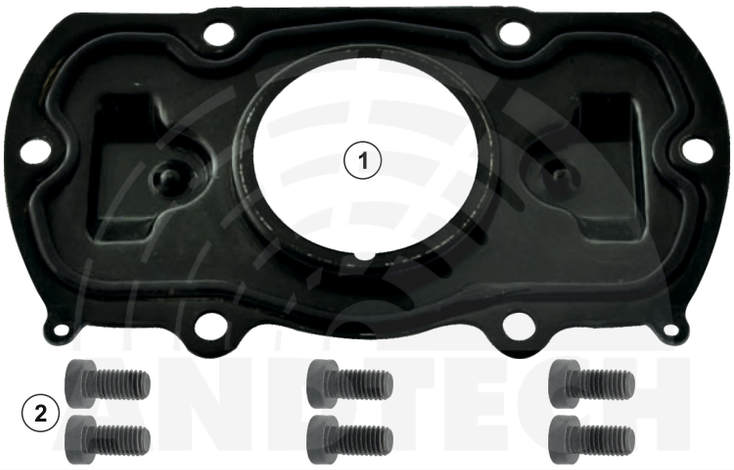

www.andacotomotiv.com

WABCO

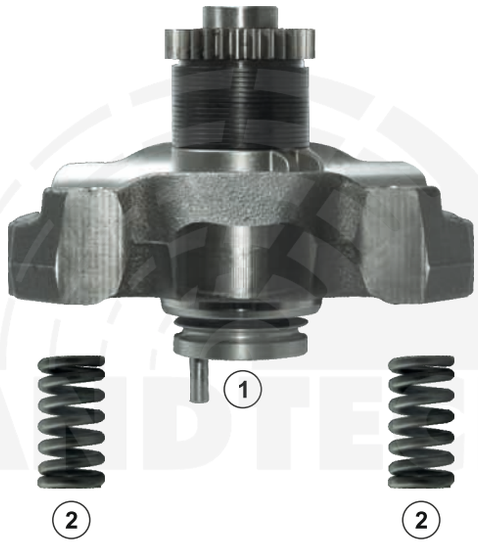

ANDTECH No :	0810 30264
Org. Ref. No :	
Application :	MAXXUS
Description :	Caliper Adjusting Mechanism Complete
1- T632	Adjusting Mechanism
2- Y64	Spring

ANDTECH No :	0810 30231
Org. Ref. No :	
Application :	MAXXUS
Description :	Caliper Bridge
1- T424	Bridge
2- Y64	Spring

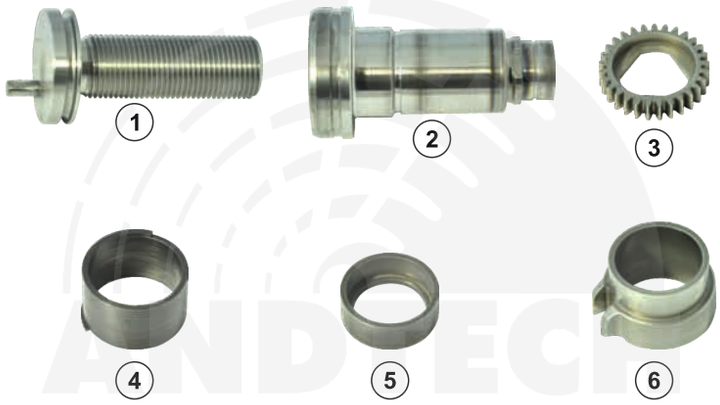

ANDTECH No :	0810 30265
Org. Ref. No :	
Application :	MAXXUS
Description :	Caliper Adjusting Mechanism Kit
1- T578	Screw
2- T358	Adjuster Pin
3- T362	Adjusting Gear
4- Y63	Spring
5- T361	Clutch
6- T360	Retainer

www.andacotomotiv.com

All original numbers, marks and models from vehicle manufacturers listed in this catalogue are for comparison purposes only, and may not be used in invoices.

WABCO

ANDTECH No :	0810 30266
Org. Ref. No :	
Application :	MAXXUS
Description :	Caliper Adjusting Mechanism Kit
1- T578	Screw
2- T358	Adjuster Pin
3- T362	Adjusting Gear
4- Y63	Spring
5- T361	Clutch
6- T360	Retainer
7- S145	Washer
8- SK16	Snap Ring
9- S146	Washer
10- S147	Washer
11- SK17	Snap Ring

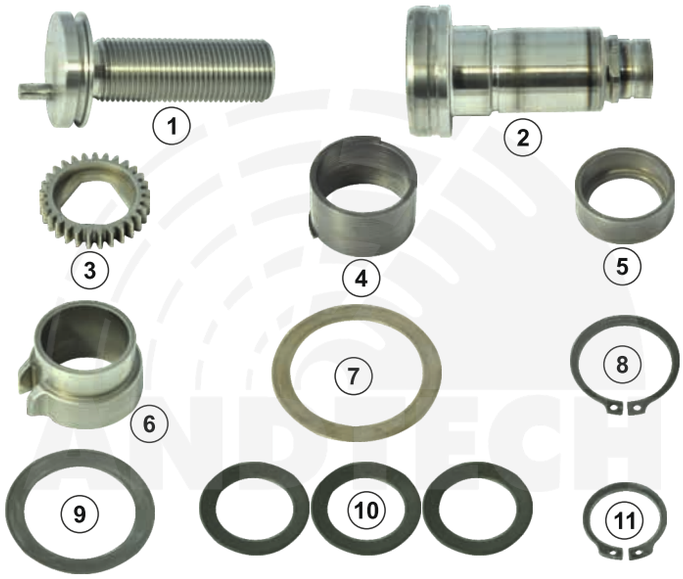

ANDTECH No :	0810 30247
Org. Ref. No :	
Application :	MAXXUS
Description :	Caliper Calibration Bolt
1- T578	Screw

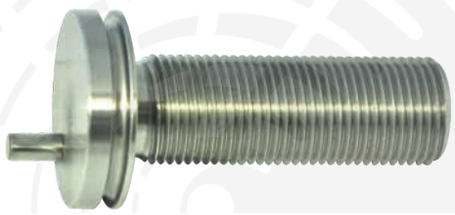

ANDTECH No :	0810 30199
Org. Ref. No :	
Application :	MAXXUS
Description :	Caliper Lever
1- T364	Lever
2- S141	Lever Bearing
3- T365	Pin

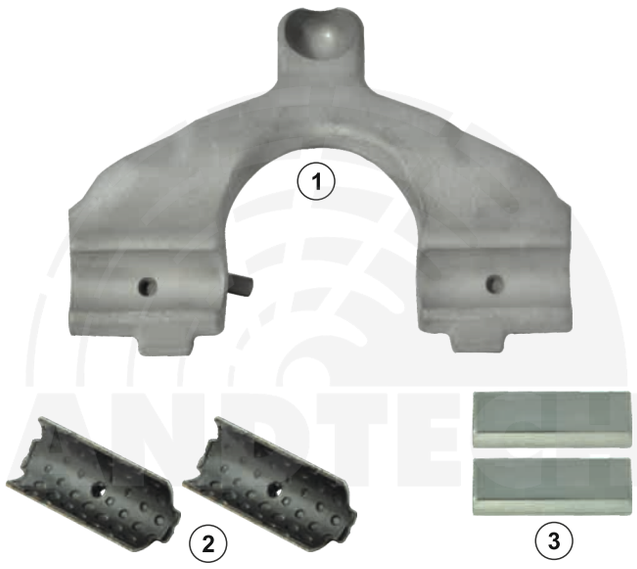

www.andacotomotiv.com

WABCO

ANDTECH No :	0810 30201
Org. Ref. No :	
Application :	MAXXUS
Description :	Caliper Roller Bearing
1- R40	Roller Bearing

ANDTECH No :	0810 30268
Org. Ref. No :	
Application :	MAXXUS
Description :	Caliper Repair Kit Complete
1- T575	Guide Pin Ø38x118mm
2- C3	Screw M16x1,5x80mm
3- T576	Guide Pin Ø38x76mm
4- K61	Boot
5- K20	Seal
6- K18	Boot
7- K19	Rubber Tap
8- K60	Seal
9- S5	Metal Tap (42x18mm)
10- B48	Bush (42x30mm)
11- T632	Adjusting Mechanism
12- Y64	Spring
13- T365	Pin
14- S141	Lever Bearing
15- R40	Roller Bearing
16- T364	Lever

www.andacotomotiv.com

All original numbers, marks and models from vehicle manufacturers listed in this catalogue are for comparison purposes only, and may not be used in invoices.

WABCO

ANDTECH No :	0810 30269
Org. Ref. No :	
Application :	MAXXUS
Description :	Caliper Repair Kit Complete
1- T575	Guide Pin Ø38x118mm
2- C3	Screw M16x1,5x80mm
3- T576	Guide Pin Ø38x76mm
4- K60	Seal
5- K61	Boot
6- K18	Boot
7- K19	Rubber Tap
8- K20	Seal
9- S5	Metal Tap (42x18mm)
10- B48	Bush (42x30mm)
11- T632	Adjusting Mechanism
12- Y64	Spring

ANDTECH No :	0810 30270
Org. Ref. No :	
Application :	MAXXUS
Description :	Caliper Repair Kit Complete
1- T575	Guide Pin Ø38x118mm
2- C3	Screw M16x1,5x80mm
3- T576	Guide Pin Ø38x76mm
4- K60	Seal
5- K61	Boot
6- K18	Boot
7- K19	Rubber Tap
8- K20	Seal
9- S5	Metal Tap (42x18mm)
10- B48	Bush (42x30mm)
11- T633	Adjusting Mechanism
12- S145	Washer
13- SK16	Snap Ring
14- S146	Washer
15- S147	Washer
16- SK17	Snap Ring

www.andacotomotiv.com

All original numbers, marks and models from vehicle manufacturers listed in this catalogue are for comparison purposes only, and may not be used in invoices.

WABCO

ANDTECH No :	0810 30271
Org. Ref. No :	
Application :	MAXXUS
Description :	Caliper Repair Kit Complete
1- T575	Guide Pin Ø38x118mm
2- C3	Screw M16x1,5x80mm
3- T576	Guide Pin Ø38x76mm
4- K60	Seal
5- K61	Boot
6- K18	Boot
7- K19	Rubber Tap
8- K20	Seal
9- S5	Metal Tap (42x18mm)
10- B48	Bush (42x30mm)
11- T633	Adjusting Mechanism

ANDTECH No :	0810 30272
Org. Ref. No :	6403229382 - 640 322 938 2
Application :	MAXXUS
Description :	Caliper Repair Kit Complete
1- T575	Guide Pin Ø38x118mm
2- C3	Screw M16x1,5x80mm
3- T576	Guide Pin Ø38x76mm
4- K61	Boot
5- K18	Boot
6- K19	Rubber Tap
7- S5	Metal Tap (42x18mm)
8- B48	Bush (42x30mm)

ANDTECH No :	0810 30267
Org. Ref. No :	6403229322 - 640 322 932 2
Application :	MAXXUS - Maxx 22T
Description :	Caliper Boot Kit
1- K61	Boot
2- K18	Boot

www.andacotomotiv.com

All original numbers, marks and models from vehicle manufacturers listed in this catalogue are for comparison purposes only, and may not be used in invoices.

WABCO

ANDTECH No :	0810 30204
Org. Ref. No :	
Application :	MAXXUS
Description :	Caliper Repair Kit
1- S139	Caliper Cover
2- C7	Screw M8x16mm

ANDTECH No :	0810 30273
Org. Ref. No :	6403229352
Application :	MAXXUS
Description :	Caliper Push Plate (Right)
1- T628	Push Plate

ANDTECH No :	0810 30274
Org. Ref. No :	6403229352
Application :	MAXXUS
Description :	Caliper Push Plate (Left)
1- T627	Push Plate

ANDTECH No :	0810 30275
Org. Ref. No :	6409097476 - 640 909 747 6
Application :	MAXXUS - FREIGHTLINER
Description :	Caliper Carrier (Left)
1- T629	Carrier 22,5"

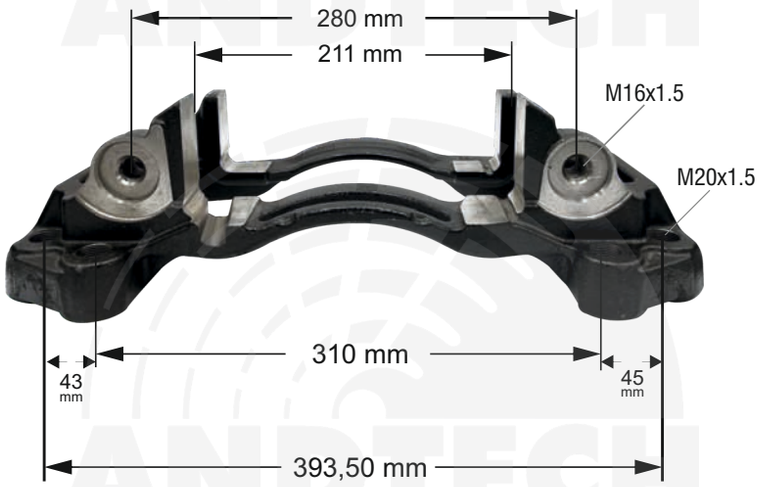

www.andacotomotiv.com

All original numbers, marks and models from vehicle manufacturers listed in this catalogue are for comparison purposes only, and may not be used in invoices.

WABCO

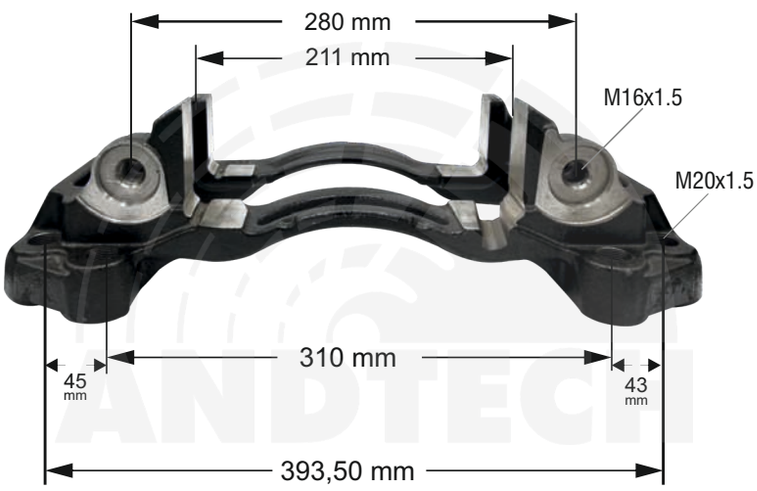

ANDTECH No :	0810 30276
Org. Ref. No :	6409097476 - 640 909 747 6
Application :	MAXXUS - FREIGHTLINER
Description :	Caliper Carrier (Right)
1- T637	Carrier 22,5"

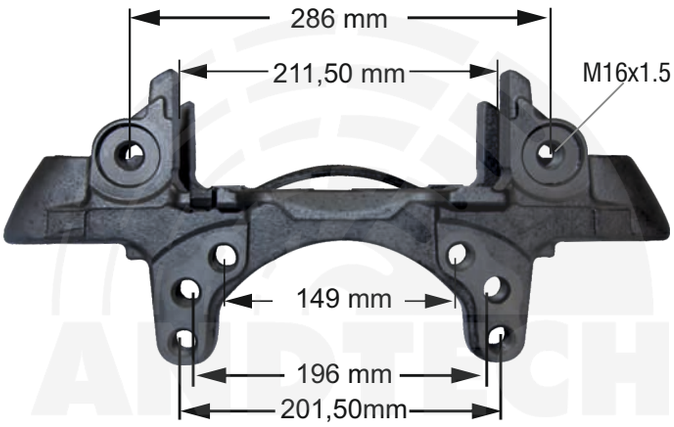

ANDTECH No :	0810 30254
Org. Ref. No :	
Application :	Maxx 22T, Schmitz Trailer
Description :	Caliper Carrier (Left)
1- T583	Carrier

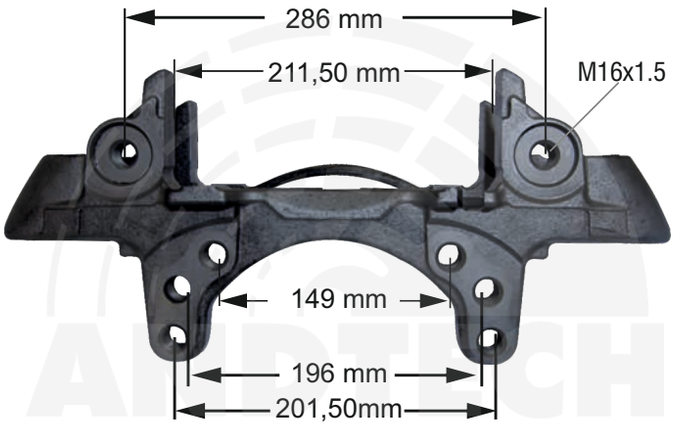

ANDTECH No :	0810 30259
Org. Ref. No :	
Application :	Maxx 22T, Schmitz Trailer
Description :	Caliper Carrier (Right)
1- T584	Carrier

www.andacotomotiv.com

All original numbers, marks and models from vehicle manufacturers listed in this catalogue are for comparison purposes only, and may not be used in invoices.

WABCO

ANDTECH No :	0810 30186
Org. Ref. No :	
Application :	17.5 - MAN 12 - 153
Description :	Caliper Carrier (Left)
1- T299	Carrier 17.5"

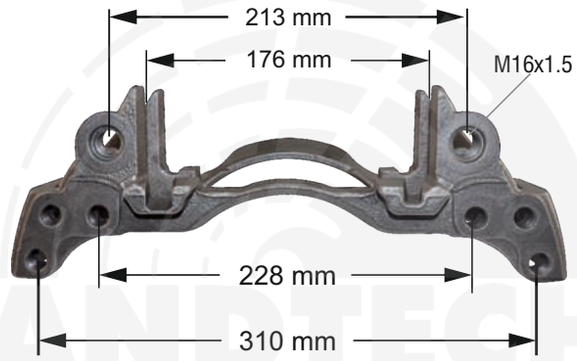

ANDTECH No :	0810 30187
Org. Ref. No :	
Application :	17.5 - MAN 12 - 153
Description :	Caliper Carrier (Right)
1- T325	Carrier 17.5"

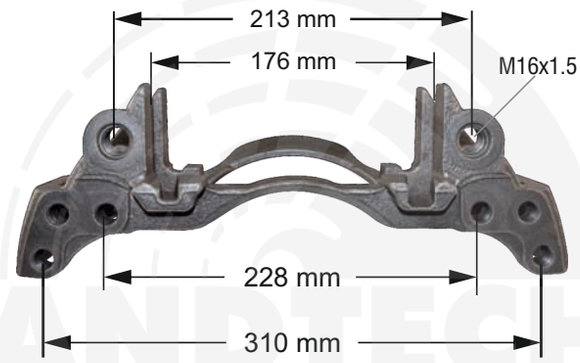

ANDTECH No :	0810 30188
Org. Ref. No :	
Application :	19.5 - SAF AXLE
Description :	Caliper Carrier (Left)
1- T300	Carrier 19.5"

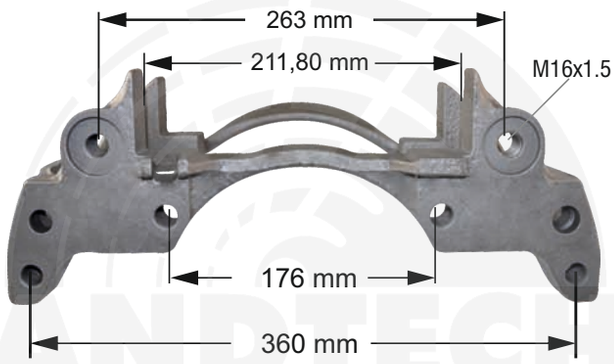

ANDTECH No :	0810 30189
Org. Ref. No :	
Application :	19.5 - SAF AXLE
Description :	Caliper Carrier (Right)
1- T326	Carrier 19.5"

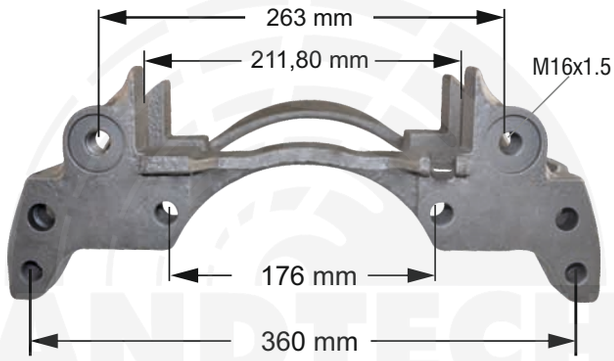

www.andacotomotiv.com

All original numbers, marks and models from vehicle manufacturers listed in this catalogue are for comparison purposes only, and may not be used in invoices.

WABCO

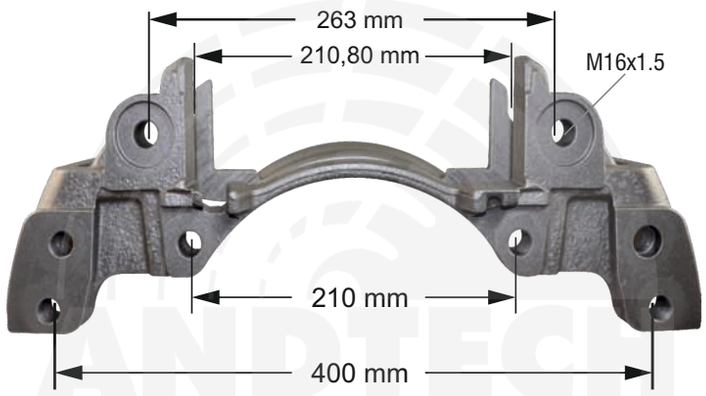

ANDTECH No :	0810 30190
Org. Ref. No :	3080003320 - 3080001901 - 40195017 - 40195001
Application :	22.5
Description :	Caliper Carrier (Left)
1- T301	Carrier 22.5"

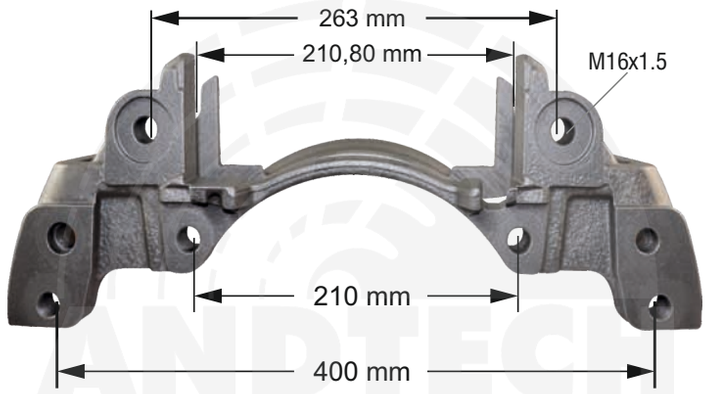

ANDTECH No :	0810 30191
Org. Ref. No :	40195018 - 40195002 - 3080003220 - 3080001801
Application :	22.5
Description :	Caliper Carrier (Right)
1- T327	Carrier 22.5"

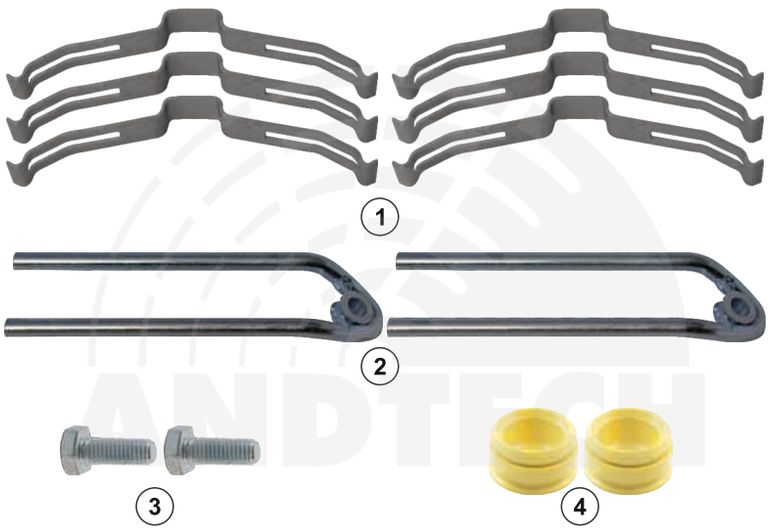

ANDTECH No :	0810 30208
Org. Ref. No :	WVA 29162
Application :	22,5
Description :	Caliper Pad Retention Kit
1- S155	Retention Spring
2- S154	Pad Retainer
3- C57	Screw M10x1,5x20mm
4- K19	Rubber Tap

www.andacotomotiv.com

All original numbers, marks and models from vehicle manufacturers listed in this catalogue are for comparison purposes only, and may not be used in invoices.

WABCO

ANDTECH No :	0810 30209
Org. Ref. No :	WVA 29126 - 29159
Application :	19,5
Description :	Caliper Pad Retention Kit
1- S157	Retention Spring
2- S156	Pad Retainer
3- K19	Rubber Tap
4- C57	Screw M10x1,5x20mm

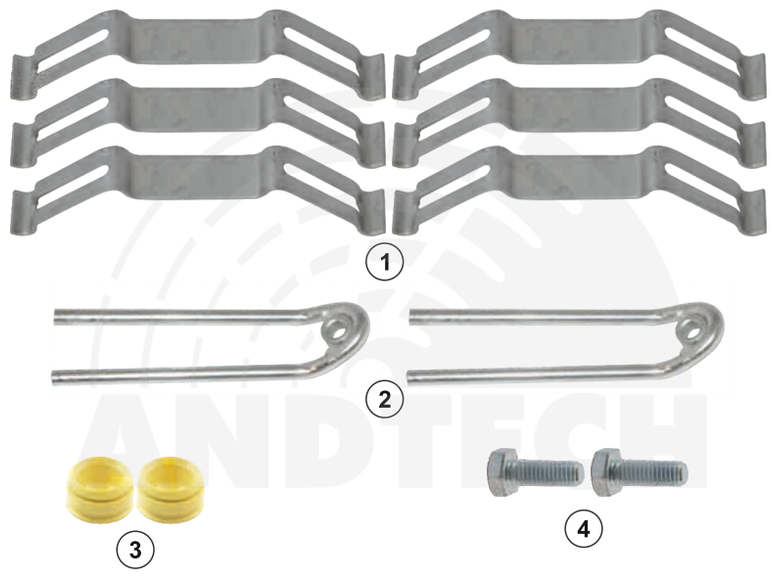

ANDTECH No :	0810 30210
Org. Ref. No :	WVA 29088 - 12999782
Application :	17,5 - MAN
Description :	Caliper Pad Retention Kit
1- S159	Retention Spring
2- S158	Pad Retainer
3- C73	Screw M10x1,5
4- K140	Rubber Tap

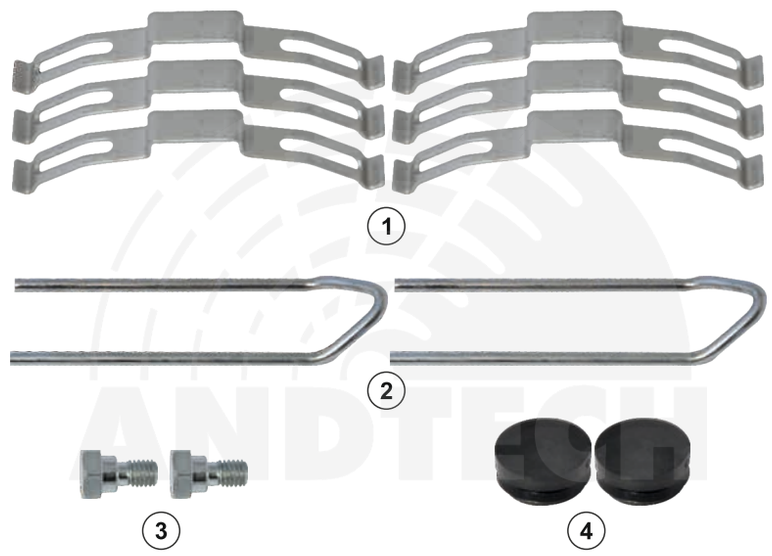

ANDTECH No :	0810 30277
Org. Ref. No :	WVA 29088
Application :	17,5 - MAN
Description :	Pad Indicator Kit
1- S159	Retention Spring
2- S158	Pad Retainer
3- K140	Rubber Tap
4- KB001	Indicator Cable
5- C73	Screw M10x1,5mm

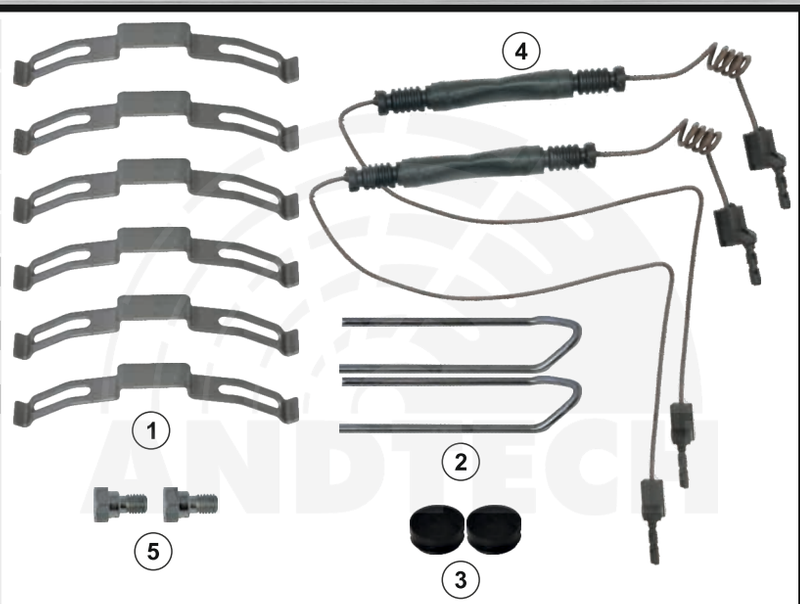

www.andacotomotiv.com

All original numbers, marks and models from vehicle manufacturers listed in this catalogue are for comparison purposes only, and may not be used in invoices.

WABCO

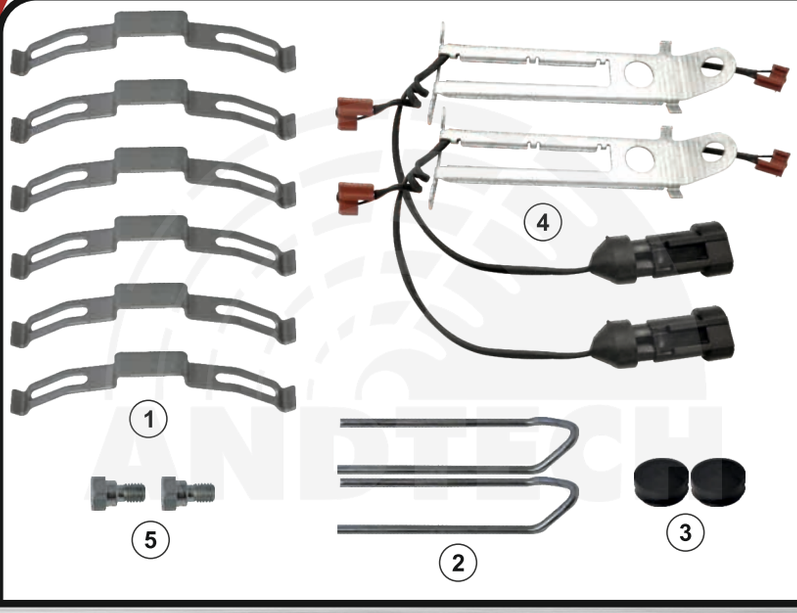

ANDTECH No :	0810 30278
Org. Ref. No :	WVA 29088
Application :	17,5 - MAN
Description :	Pad Indicator Kit
1- S159	Retention Spring
2- S158	Pad Retainer
3- K140	Rubber Tap
4- KB002	Indicator Cable
5- C73	Screw M10x1,5mm

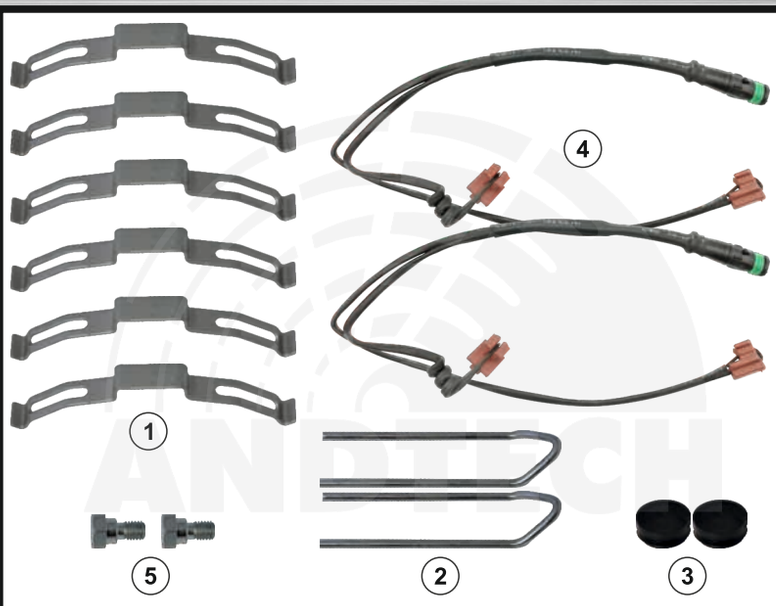

ANDTECH No :	0810 30279
Org. Ref. No :	WVA 29088 - 12182145 - 12182192 - 12999577
Application :	17,5 - MAN - DAF
Description :	Pad Indicator Kit
1- S159	Retention Spring
2- S158	Pad Retainer
3- K140	Rubber Tap
4- KB006	Indicator Cable
5- C73	Screw M10x1,5mm

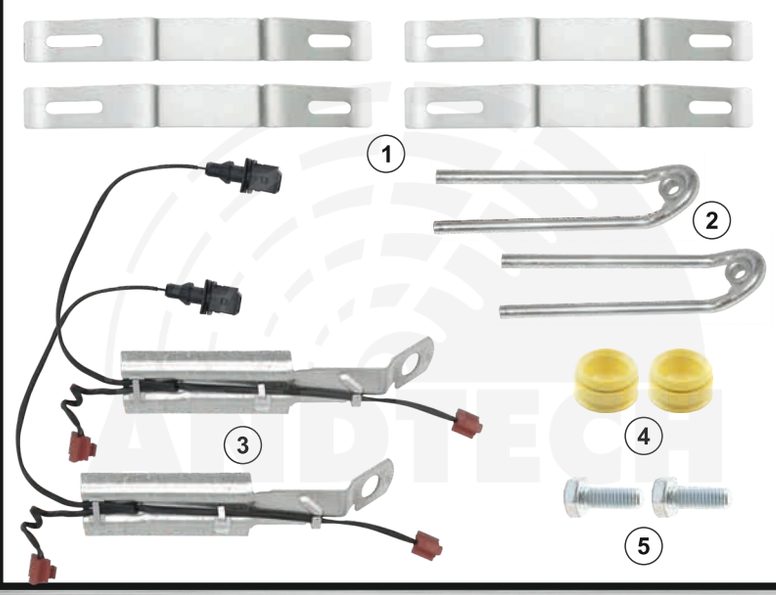

ANDTECH No :	0810 30280
Org. Ref. No :	WVA 29141 - 29142 - 29119 - 68323004 - 969900275
Application :	19,5 - 2
Description :	Pad Indicator Kit
1- S210	Retention Spring
2- S156	Pad Retainer
3- KB007	Indicator Cable
4- K19	Rubber Tap
5- C57	Screw M10x1,25x20mm

www.andacotomotiv.com

All original numbers, marks and models from vehicle manufacturers listed in this catalogue are for comparison purposes only, and may not be used in invoices.

WABCO

ANDTECH No :	0810 30281
Org. Ref. No :	WVA 29141 - 29142 - 29119 - 68323004 - 969900275
Application :	19,5 - 2
Description :	Pad Retainer Kit
1- S210	Retention Spring
2- S156	Pad Retainer
3- K19	Rubber Tap
4- C57	Screw M10x1,25x20mm

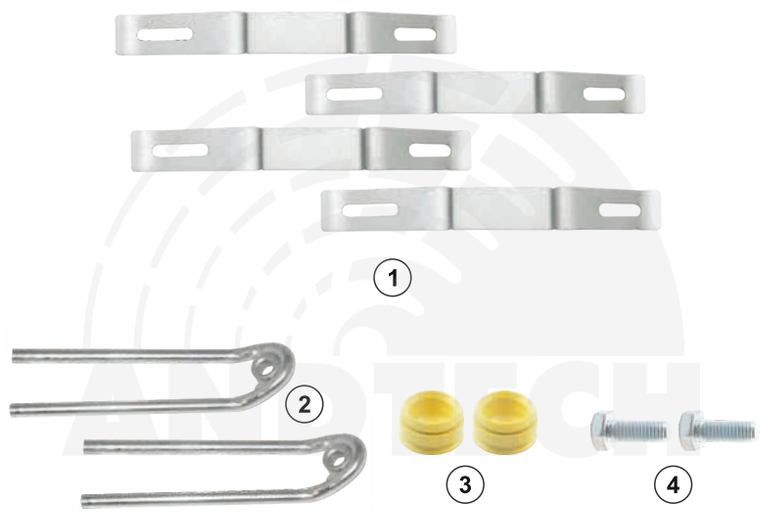

ANDTECH No :	0810 30282
Org. Ref. No :	WVA 29088 - 5010848607
Application :	17,5 - MAN - IVECO
Description :	Pad Indicator Kit
1- S159	Retention Spring
2- S158	Pad Retainer
3- K140	Rubber Tap
4- KB013	Indicator Cable
5- C73	Screw M10x1,5mm

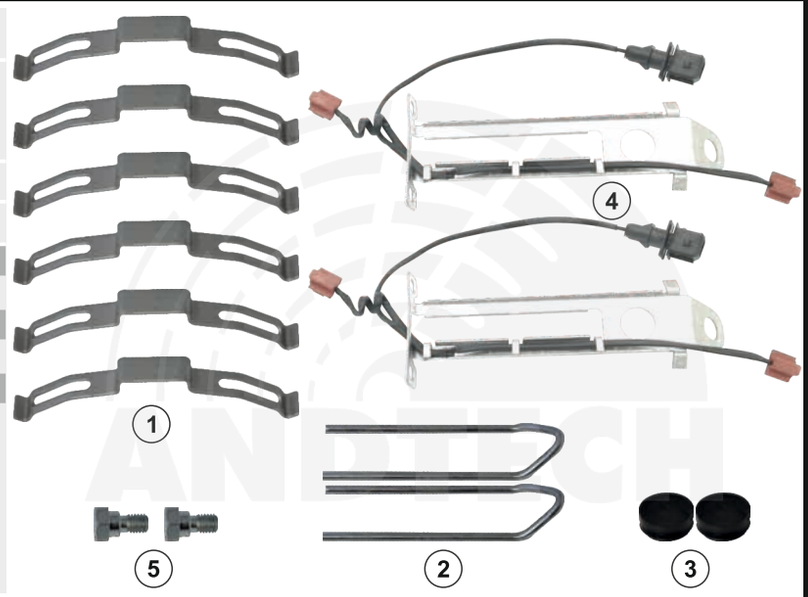

ANDTECH No :	0810 30283
Org. Ref. No :	WVA 29159 - 29126 - 1628064 - 12999797 68323004
Application :	19,5 - SAF - DAF
Description :	Pad Indicator Kit
1- S157	Retention Spring
2- S156	Pad Retainer
3- K19	Rubber Tap
4- KB014	Indicator Cable
5- C57	Screw M10x1,5x20mm

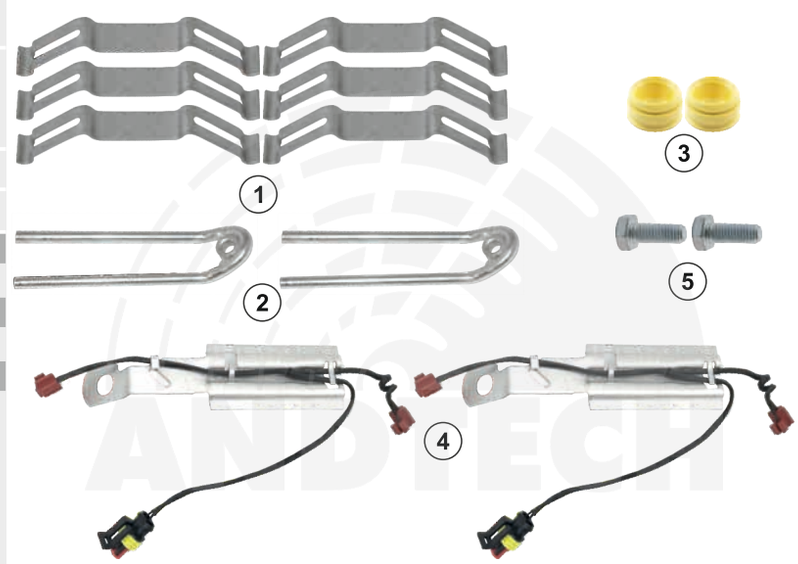

www.andacotomotiv.com

WABCO

ANDTECH No :	0810 30162
Org. Ref. No :	
Application :	19.5 - Double Piston
Description :	Caliper Bridge
1- T254	Bridge
2- Y46	Spring

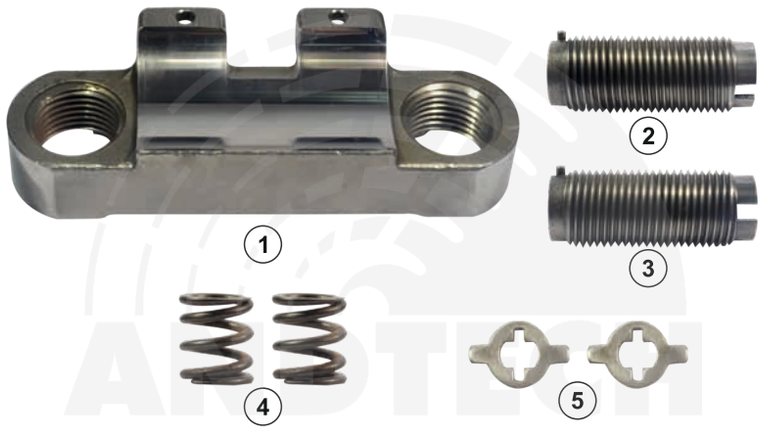

ANDTECH No :	0810 30163
Org. Ref. No :	
Application :	19.5 - Double Piston
Description :	Caliper Bridge Assembly
1- T254	Bridge
2- T255	Calibration Bolt (Right)
3- T256	Calibration Bolt (Left)
4- Y46	Spring
5- T257	Locking Shim

ANDTECH No :	0810 30164
Org. Ref. No :	
Application :	19.5 - Double Piston
Description :	Caliper Calibration Bolt (Right)
1- T255	Calibration Bolt (Right)

ANDTECH No :	0810 30165
Org. Ref. No :	
Application :	19.5 - Double Piston
Description :	Caliper Calibration Bolt (Left)
1- T256	Calibration Bolt (Left)

www.andacotomotiv.com

All original numbers, marks and models from vehicle manufacturers listed in this catalogue are for comparison purposes only, and may not be used in invoices.

WABCO

ANDTECH No :	0810 30166
Org. Ref. No :	
Application :	19.5 - Double Piston
Description :	Caliper Calibration Bolt Kit (Right)
1- T255	Calibration Bolt (Right)
2- T257	Locking Shim
3- SK8	Snap Ring

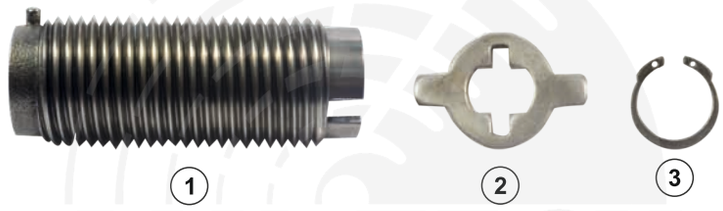

ANDTECH No :	0810 30167
Org. Ref. No :	
Application :	19.5 - Double Piston
Description :	Caliper Calibration Bolt Kit (Left)
1- T256	Calibration Bolt (Left)
2- T257	Locking Shim
3- SK8	Snap Ring

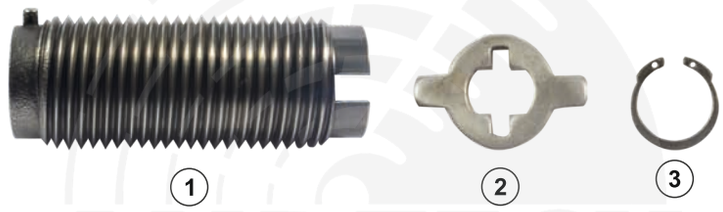

ANDTECH No :	0810 30261
Org. Ref. No :	
Application :	19.5 - Double Piston
Description :	Caliper Lever
1- T548	Lever (Without Mechanism)

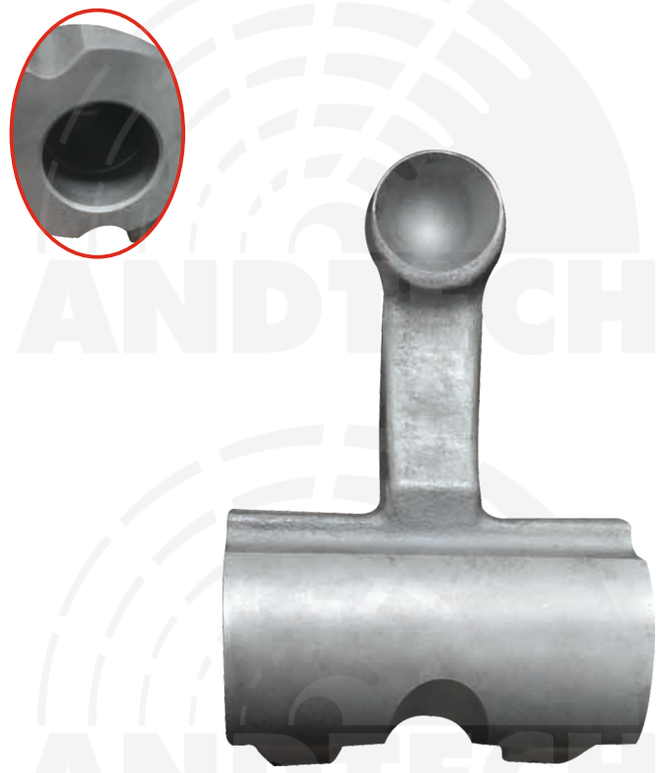

www.andacotomotiv.com

All original numbers, marks and models from vehicle manufacturers listed in this catalogue are for comparison purposes only, and may not be used in invoices.

WABCO

ANDTECH No :	0810 30216
Org. Ref. No :	
Application :	19.5 - Double Piston
Description :	Caliper Lever
1- T390	Lever

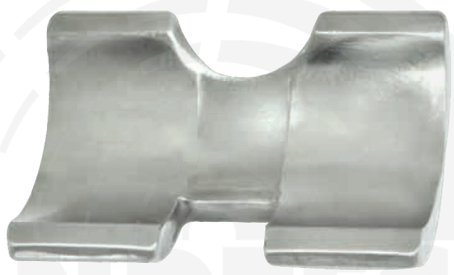

ANDTECH No :	0810 30218
Org. Ref. No :	
Application :	19.5 - Double Piston
Description :	Caliper Bearing Housing
1- T393	Bearing Housing

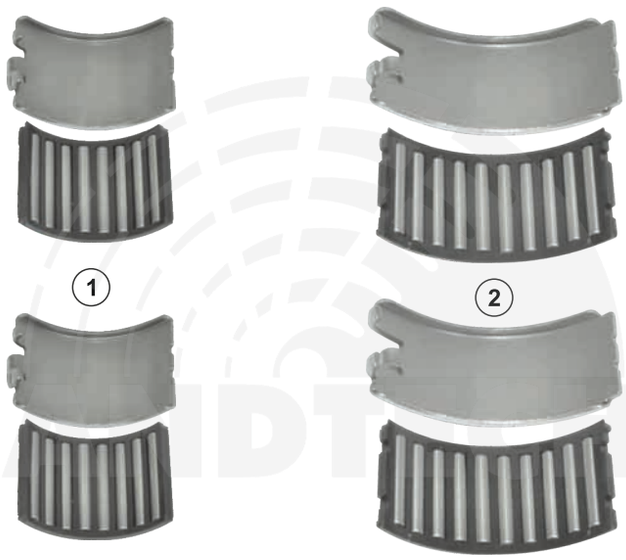

ANDTECH No :	0810 30220
Org. Ref. No :	
Application :	19.5 - Double Piston
Description :	Caliper Roller Bearing Kit
1- R41	Upper Bearing
2- R42	Lower Bearing

www.andacotomotiv.com

All original numbers, marks and models from vehicle manufacturers listed in this catalogue are for comparison purposes only, and may not be used in invoices.

WABCO

ANDTECH No :	0810 30217
Org. Ref. No :	
Application :	19.5 - Double Piston
Description :	Caliper Mechanism Gear Kit
1- T391	Gear (Right)
2- T392	Gear (Left)
3- Y28	Spring

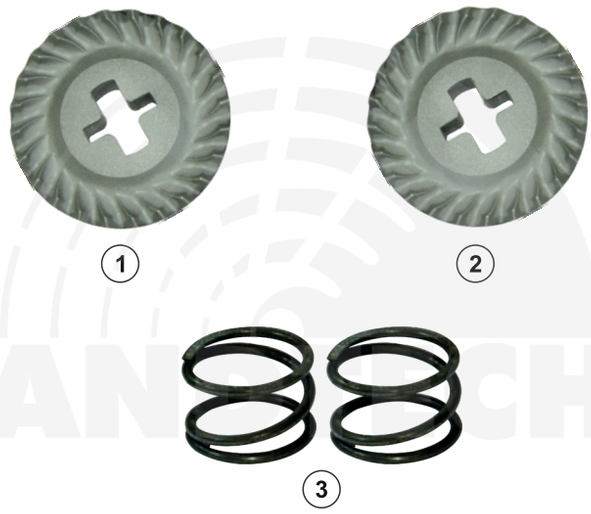

ANDTECH No :	0810 30221
Org. Ref. No :	
Application :	19.5 - Double Piston
Description :	Caliper Lever Gear
1- T394	Lever Gear

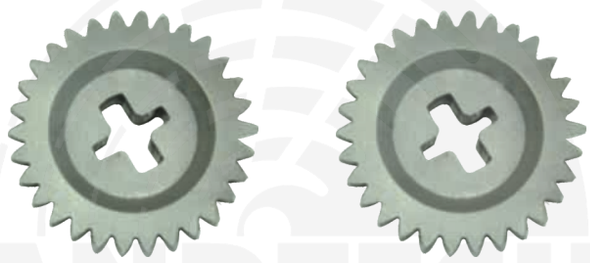

ANDTECH No :	0810 30219
Org. Ref. No :	
Application :	19.5 - Double Piston
Description :	Caliper Gasket Kit
1- K142	Gasket
2- C15	Screw M16x1,0x40mm
3- C14	Screw M16x1,5x40mm

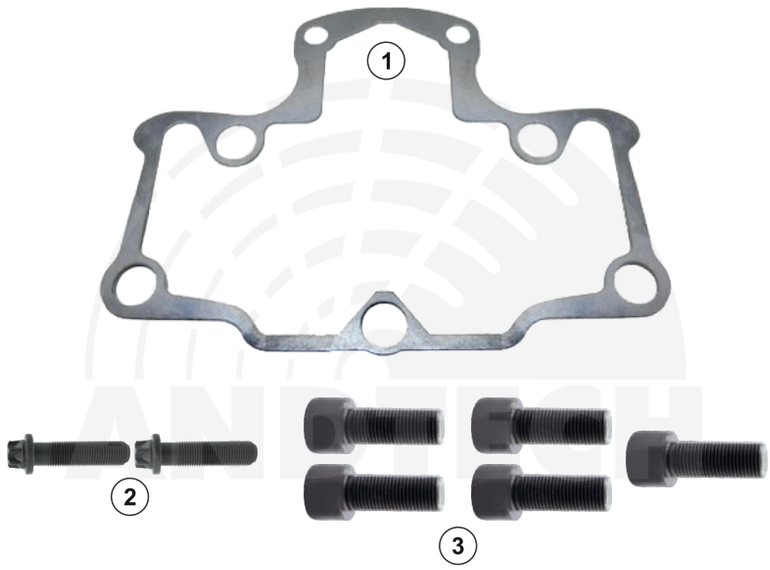

www.andacotomotiv.com

WABCO

ANDTECH No :	0810 30226
Org. Ref. No :	
Application :	17.5 - 19.5 - 22.5 - 19.5 Double Piston
Description :	Caliper Rubber Kit
1- K19	Rubber Tap
2- K20	Seal

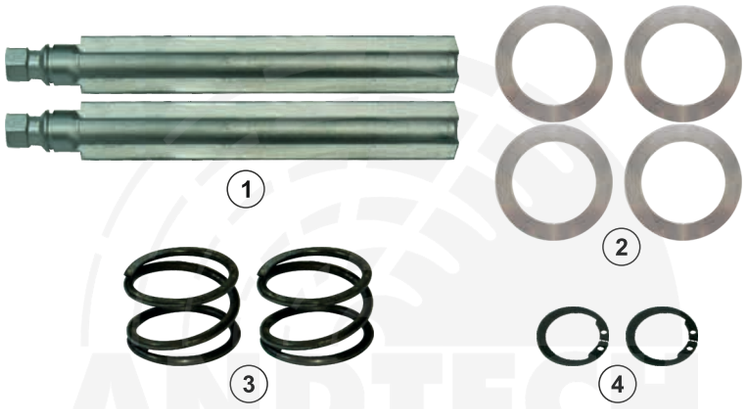

ANDTECH No :	0810 30227
Org. Ref. No :	
Application :	19.5 - Double Piston
Description :	Mechanism Shaft Repair Kit
1- T298	Shaft
2- S34	Washer
3- Y28	Spring
4- SK21	Snap Ring

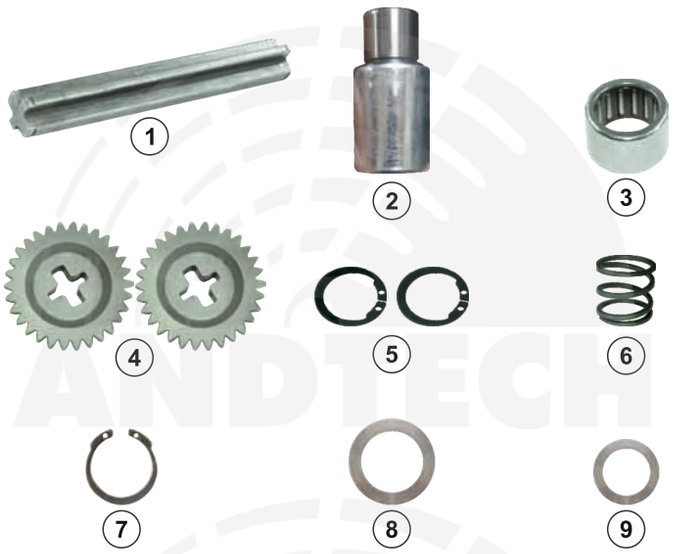

ANDTECH No :	0810 30229
Org. Ref. No :	
Application :	19.5 - Double Piston
Description :	Caliper Lever Mechanism Repair Kit
1- T357	Mechanism Shaft
2- T396	Mechanism Clutch
3- R19	Clutch Bearing
4- T394	Lever Gear
5- SK21	Snap Ring
6- Y27	Spring
7- SK22	Snap Ring
8- S71	Washer
9- S72	Washer

ANDTECH No :	0810 30230
Org. Ref. No :	
Application :	19.5 - Double Piston
Description :	Caliper Shaft Kit
1- T298	Shaft

www.andacotomotiv.com

All original numbers, marks and models from vehicle manufacturers listed in this catalogue are for comparison purposes only, and may not be used in invoices.

ANDAÇ

ANDAÇ

LORENZ
LS 154
089
LIEBHERR
LC 82
ANDAC

BPW

ANDTECH No :	0810 70120
Org. Ref. No :	
Application :	TSB 3709/4309/4312
Description :	Caliper Calibration Mechanism Complete (Tappets with Pin)
1- T387	Calibration Mechanism Complete
2- C7	Screw

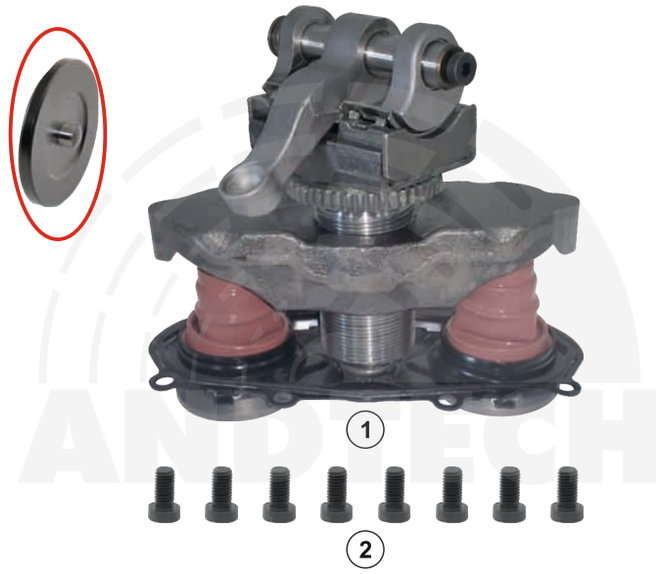

ANDTECH No :	0810 70132
Org. Ref. No :	
Application :	TSB 3709/4309/4312
Description :	Caliper Calibration Mechanism Complete (Without Lever - Tappets with Pin)
1- T567	Calibration Mechanism Complete
2- C7	Cover Screw

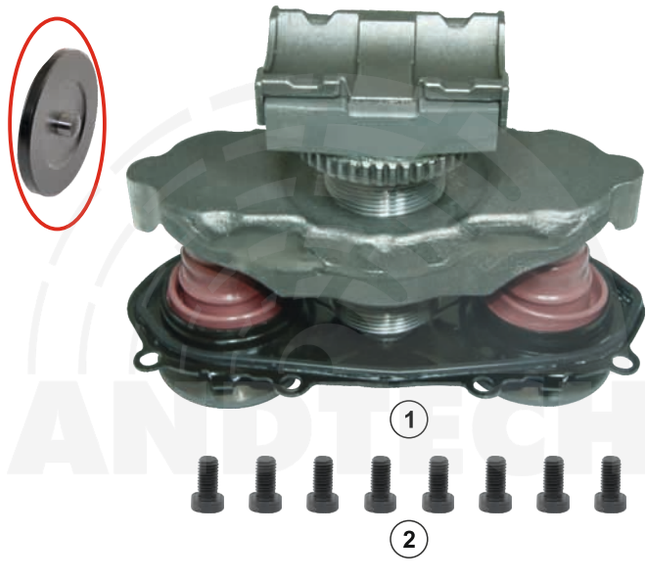

ANDTECH No :	0810 70134
Org. Ref. No :	
Application :	TSB 3709/4309/4312
Description :	Calibration Mechanism Complete (Tappets with Pin)
1- T569	Calibration Mechanism Complete
2- C7	Cover Screw

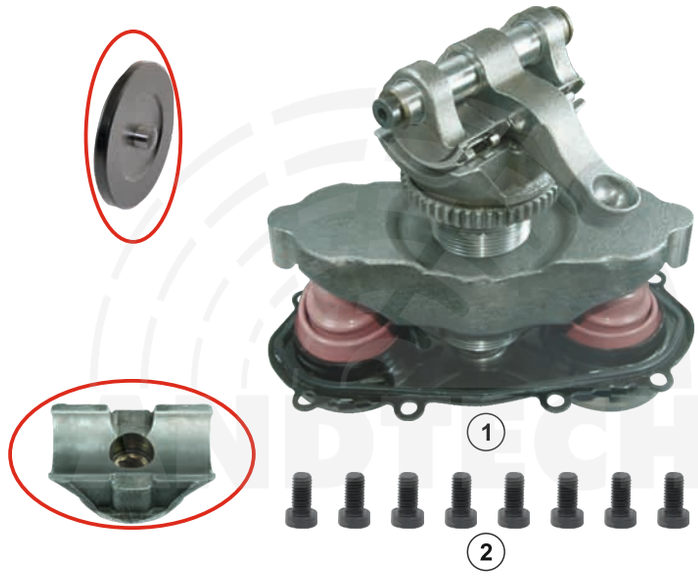

www.andacotomotiv.com

BPW

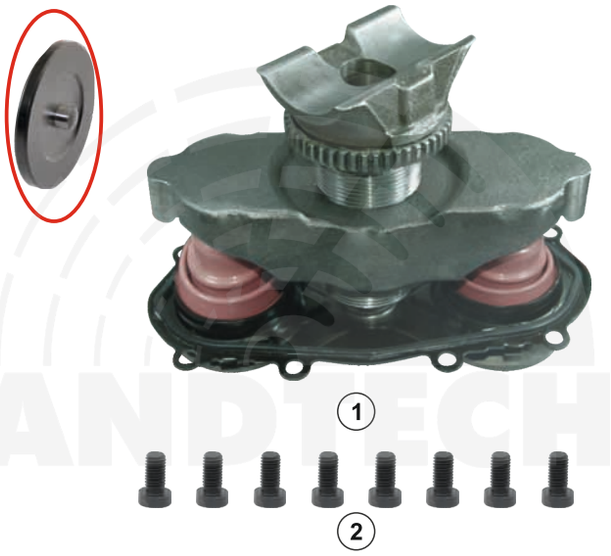

ANDTECH No :	0810 70135
Org. Ref. No :	
Application :	TSB 3709/4309/4312
Description :	Calibration Mechanism Complete (Without Lever - Tappets with Pin)
1- T570	Calibration Mechanism Complete
2- C7	Cover Screw

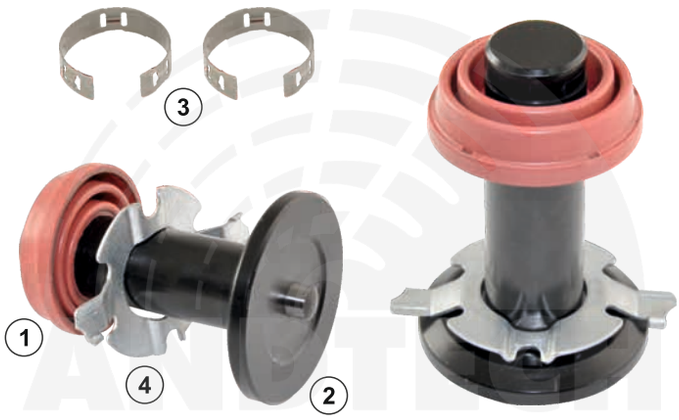

ANDTECH No :	0810 70101
Org. Ref. No :	09.801.07.63.1
Application :	TSB 3709/4309/4312
Description :	Caliper Tappet and Boot Repair Kit (Tappets with Pin)
1- K126	Tappet Boot
2- T287	Tappet
3- S109	Clamp
4- S110	Locking Shim

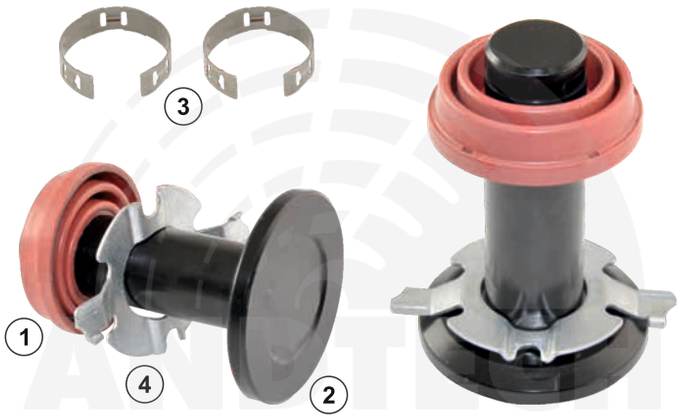

ANDTECH No :	0810 70131
Org. Ref. No :	09.801.07.63.0
Application :	TSB 3709/4309/4312
Description :	Caliper Tappet and Boot Repair Kit (Tappets without Pin)
1- K126	Tappet Boot
2- T565	Tappet
3- S109	Clamp
4- S110	Locking Shim

www.andacotomotiv.com

All original numbers, marks and models from vehicle manufacturers listed in this catalogue are for comparison purposes only, and may not be used in invoices.

BPW

ANDTECH No :	0810 70102
Org. Ref. No :	
Application :	TSB 3709/4309/4312
Description :	Caliper Repair Kit
1- T291	Guide Pin Ø37x123mm
2- C61	Screw M16x1.5x100mm
3- T292	Guide Pin Ø36x70mm
4- C8	Screw M16x1.5x70mm
5- K125	Boot
6- P47	Plastic Ring
7- P54	Plastic Cover
8- K128	O-Ring
9- K132	Rubber Tap
10- B38	Bush (41x73mm)
11- B39	Bush (41x30mm)
12- SK11	Pin Ring
13- K144	O-Ring

ANDTECH No :	0810 70103
Org. Ref. No :	
Application :	TSB 3709/4309/4312
Description :	Caliper Repair Kit
1- T291	Guide Pin Ø37x123mm
2- C61	Screw M16x1.5x100mm
3- T292	Guide Pin Ø36x70mm
4- C8	Screw M16x1.5x70mm
5- P54	Plastic Cover
6- K128	O-Ring
7- B38	Bush (41x73mm)
8- B39	Bush (41x30mm)
9- SK11	Pin Ring

ANDTECH No :	0810 70119
Org. Ref. No :	09.801.07.61.0
Application :	TSB 3709/4309/4312
Description :	Caliper Repair Kit
1- T291	Guide Pin Ø37x123mm
2- C61	Screw M16x1.5x100mm
3- T292	Guide Pin Ø36x70mm
4- C8	Screw M16x1.5x70mm
5- B38	Bush (41x73mm)
6- B39	Bush (41x30mm)
7- SK11	Pin Ring

www.andacotomotiv.com

BPW

ANDTECH No :	0810 70104
Org. Ref. No :	09.801.05.81.0
Application :	TSB 3709/4309/4312
Description :	Caliper Repair Kit
1- T291	Guide Pin Ø37x123mm
2- C61	Screw M16x1.5x100mm
3- T292	Guide Pin Ø36x70mm
4- C8	Screw M16x1.5x70mm
5- P47	Plastic Ring
6- S111	Pad Retainer
7- SK11	Pin Ring

ANDTECH No :	0810 70121
Org. Ref. No :	09.801.07.62.0
Application :	TSB 3709/4309/4312
Description :	Caliper Repair Kit
1- K125	Boot
2- P47	Plastic Ring
3- P54	Plastic Cover
4- K128	O-Ring
5- K132	Rubber Tap
6- K144	O-Ring

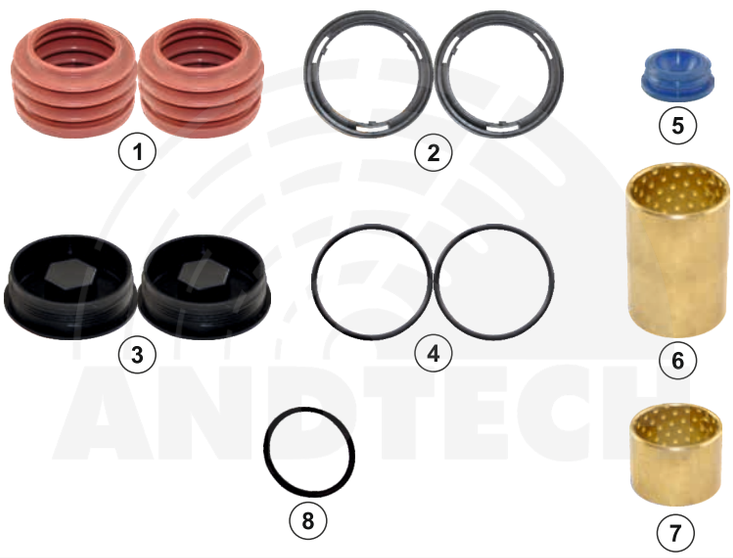

ANDTECH No :	0810 70105
Org. Ref. No :	
Application :	TSB 3709/4309/4312
Description :	Caliper Repair Kit
1- K125	Boot
2- P47	Plastic Ring
3- P54	Plastic Cover
4- K128	O-Ring
5- K132	Rubber Tap
6- B38	Bush (41x73mm)
7- B39	Bush (41x30mm)
8- K144	O-Ring

www.andacotomotiv.com

All original numbers, marks and models from vehicle manufacturers listed in this catalogue are for comparison purposes only, and may not be used in invoices.

BPW

ANDTECH No :	0810 70106
Org. Ref. No :	
Application :	TSB 3709/4309/4312
Description :	Caliper Calibration Cover
1- T293	Calibration Cover
2- C7	Cover Screw M8x16mm
3- SK12	Snap Ring

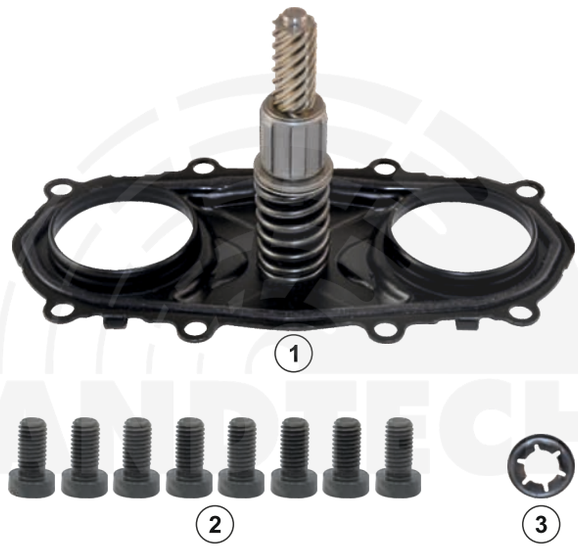

ANDTECH No :	0810 70107
Org. Ref. No :	
Application :	TSB 3709/4309/4312
Description :	Caliper Bridge
1- T274	Bridge

ANDTECH No :	0810 70108
Org. Ref. No :	
Application :	TSB 3709/4309/4312
Description :	Caliper Mechanism Gear
1- T264	Mechanism Gear

www.andacotomotiv.com

BPW

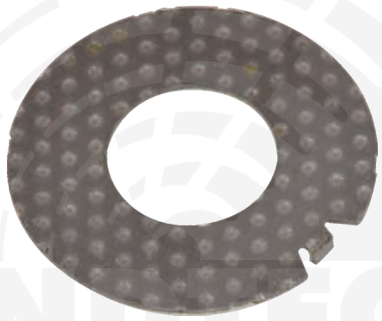

ANDTECH No :	0810 70109
Org. Ref. No :	
Application :	TSB 3709/4309/4312
Description :	Caliper Mechanism Washer
1- S112	Washer

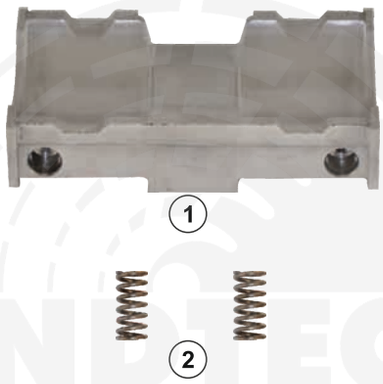

ANDTECH No :	0810 70110
Org. Ref. No :	
Application :	TSB 3709/4309/4312
Description :	Caliper Bearing Housing
1- T272	Bearing Housing
2- Y52	Spring

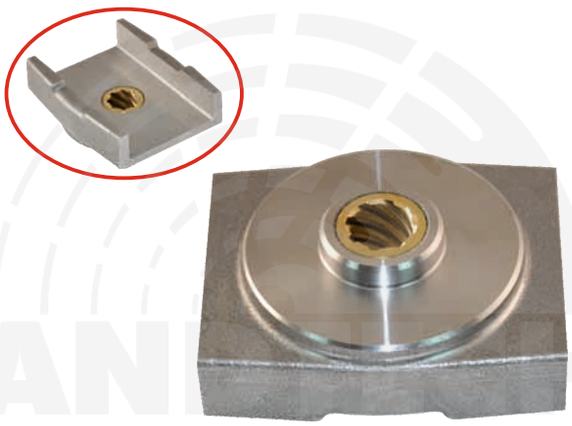

ANDTECH No :	0810 70111
Org. Ref. No :	
Application :	TSB 3709/4309/4312
Description :	Caliper Mechanism Housing
1- T273	Mechanism Housing

www.andacotomotiv.com

All original numbers, marks and models from vehicle manufacturers listed in this catalogue are for comparison purposes only, and may not be used in invoices.

BPW

ANDTECH No :	0810 70128
Org. Ref. No :	
Application :	TSB 3709/4309/4312
Description :	Caliper Mechanism Housing
1- T490	Mechanism Housing

ANDTECH No :	0810 70112
Org. Ref. No :	
Application :	TSB 3709/4309/4312
Description :	Caliper Bearing Housing
1- T295	Bearing Housing
2- R23	Roller Bearing

ANDTECH No :	0810 70113
Org. Ref. No :	
Application :	TSB 3709/4309/4312
Description :	Caliper Lever
1- T288	Lever
2- T294	Lever Pin
3- K129	O-Ring
4- C7	Screw
5- S115	Washer

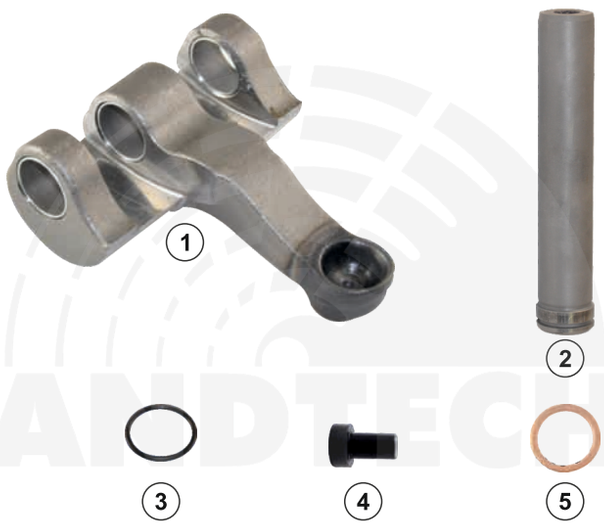

www.andacotomotiv.com

BPW

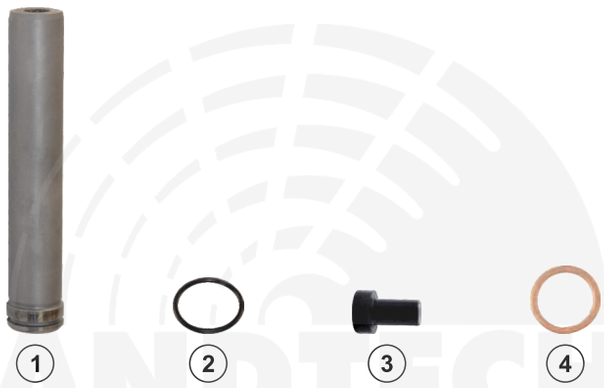

ANDTECH No :	0810 70125
Org. Ref. No :	
Application :	TSB 3709/4309/4312
Description :	Caliper Lever Pin Kit
1- T294	Lever Pin
2- K129	O-Ring
3- C7	Screw
4- S115	Washer

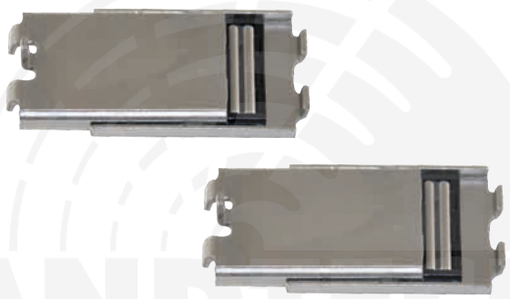

ANDTECH No :	0810 70114
Org. Ref. No :	
Application :	TSB 3709/4309/4312
Description :	Caliper Roller Bearing
1- R25	Roller Bearing

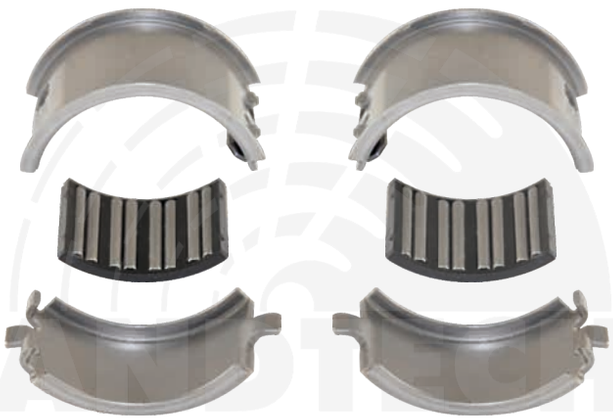

ANDTECH No :	0810 70115
Org. Ref. No :	
Application :	TSB 3709/4309/4312
Description :	Caliper Roller Bearing
1- R26	Roller Bearing

www.andacotomotiv.com

All original numbers, marks and models from vehicle manufacturers listed in this catalogue are for comparison purposes only, and may not be used in invoices.

BPW

ANDTECH No :	0810 70123
Org. Ref. No :	
Application :	TSB 3709/4309/4312
Description :	Plastic Ring Kit
1- P47	Plastic Ring

ANDTECH No :	0810 70124
Org. Ref. No :	09.801.07.87.0
Application :	TSB 3709/4309/4312
Description :	Plastic Cover Kit
1- P54	Plastic Cover
2- P47	Plastic Ring
3- K128	O-Ring

ANDTECH No :	0810 70116
Org. Ref. No :	
Application :	TSB 3709/4309/4312
Description :	Caliper Adjuster Repair Kit
1- T289	Gear
2- B40	Bush
3- Y51	Spring
4- K130	Seal
5- S108	Washer
6- SK18	Snap Ring

www.andacotomotiv.com

All original numbers, marks and models from vehicle manufacturers listed in this catalogue are for comparison purposes only, and may not be used in invoices.

BPW

ANDTECH No :	0810 70122
Org. Ref. No :	09.801.07.68.1
Application :	TSB 3709/4309/4312
Description :	Caliper Pad Retainer Kit
1- S111	Pad Retainer
2- T385	Detent Pin
3- S18	Washer
4- S19	Cotter Pin
5- S163	Pad Retention Spring

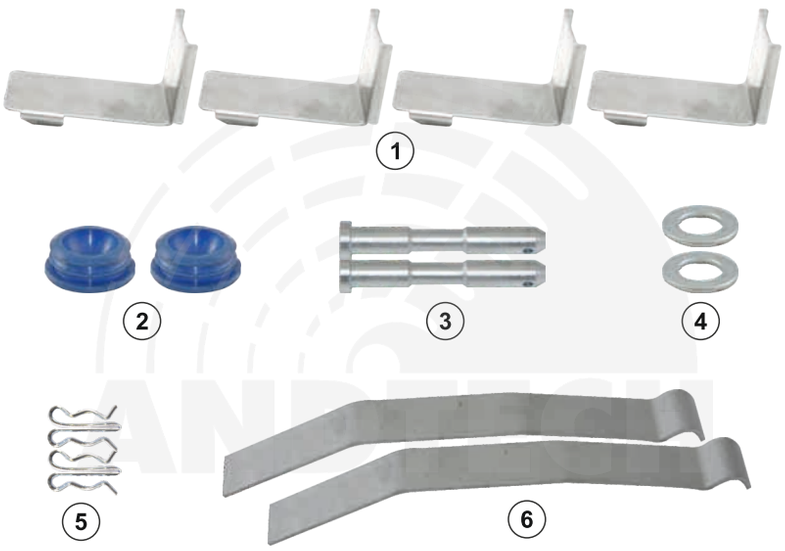

ANDTECH No :	0810 70139
Org. Ref. No :	WVA 29227
Application :	TSB 3709
Description :	Caliper Pad Retainer Kit
1- S223	Pad Retainer (63mm)
2- K132	Rubber Tap
3- T385	Detent Pin
4- S18	Washer
5- S19	Cotter Pin
6- S163	Pad Retention Spring

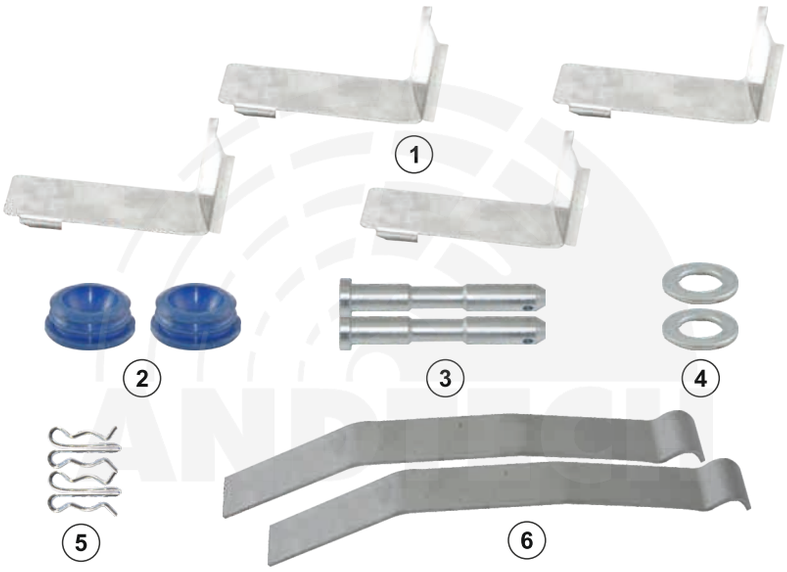

ANDTECH No :	0810 70140
Org. Ref. No :	WVA 29228
Application :	TSB 4309 - TSB 4312
Description :	Caliper Pad Retainer Kit
1- S224	Pad Retainer (75mm)
2- K132	Rubber Tap
3- T385	Detent Pin
4- S18	Washer
5- S19	Cotter Pin
6- S163	Pad Retention Spring

www.andacotomotiv.com

All original numbers, marks and models from vehicle manufacturers listed in this catalogue are for comparison purposes only, and may not be used in invoices.

BPW

ANDTECH No :	0810 70117
Org. Ref. No :	
Application :	TSB 3709/4309/4312
Description :	Caliper Tap
1- S119	Metal Tap

ANDTECH No :	0810 70118
Org. Ref. No :	
Application :	TSB 3709/4309/4312
Description :	Caliper Snap Ring
1- SK12	Snap Ring

www.andacotomotiv.com

All original numbers, marks and models from vehicle manufacturers listed in this catalogue are for comparison purposes only, and may not be used in invoices.

HALDEX

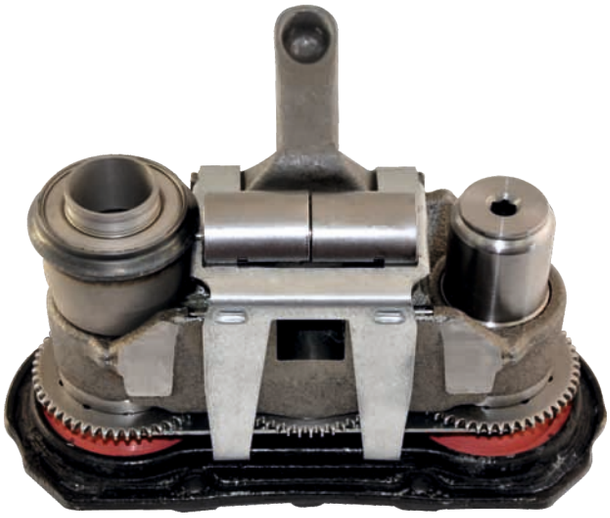

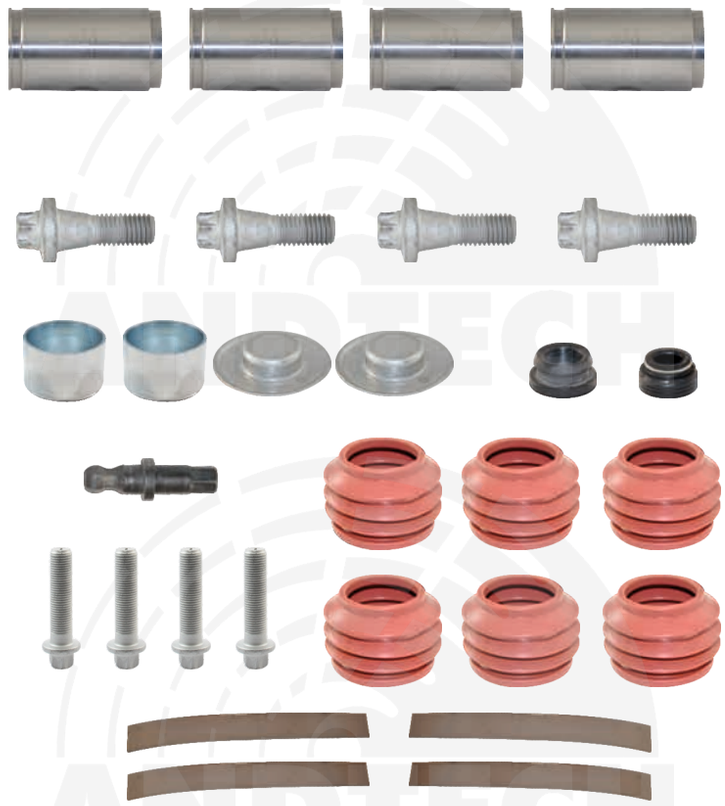

ANDTECH No :	0810 60101
Org. Ref. No :	
Application :	MODUL X
Description :	Caliper Complete Overhaul Repair Kit

ANDTECH No :	0810 60102
Org. Ref. No :	
Application :	MODUL X
Description :	Caliper Calibration Mechanism Complete
1- T290	Calibration Mechanism Complete
2- T282	Adjuster Bolt
3- C58	Screw M8x1.25x30mm
4- K123	Rubber Tap
5- K124	Seal

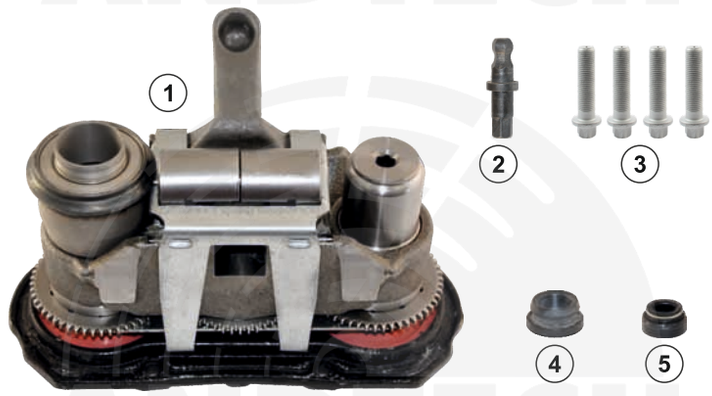

ANDTECH No :	0810 60103
Org. Ref. No :	91012
Application :	MODUL X
Description :	Caliper Repair Kit
1- T278	Guide Pin Ø35x63mm
2- C56	Screw M14x2x42mm
3- S105	Metal Tap (42x25mm)
4- S100	Metal Cap (57x13mm)
5- K122	Boot
6- P50	Teflon Bush
7- K123	Rubber Tap

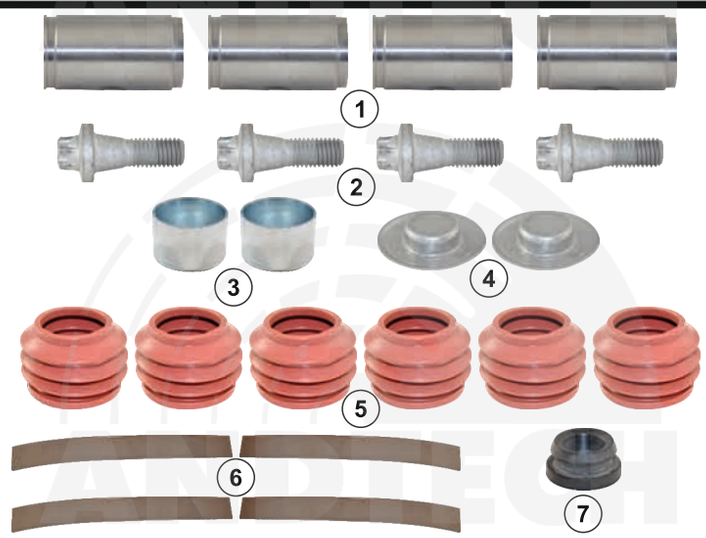

www.andacotomotiv.com

All original numbers, marks and models from vehicle manufacturers listed in this catalogue are for comparison purposes only, and may not be used in invoices.

HALDEX

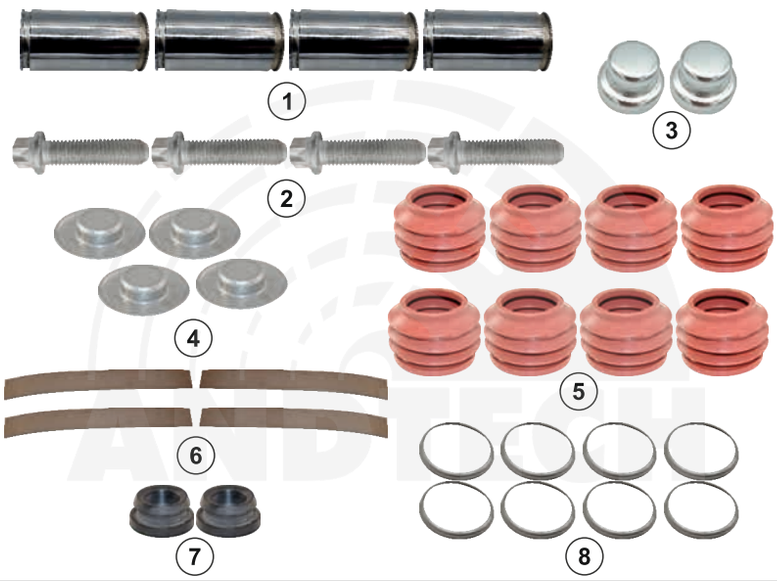

ANDTECH No :	0810 60166
Org. Ref. No :	89541
Application :	MARK III - MARK IV
Description :	Caliper Repair Kit
1- T631	Guide Pin Ø35x70mm
2- C74	Screw M14x2x53mm
3- S227	Metal Tap (57x40mm)
4- S100	Metal Cap (57x13mm)
5- K122	Boot
6- P50	Teflon Bush
7- K123	Rubber Tap
8- S228	Ring

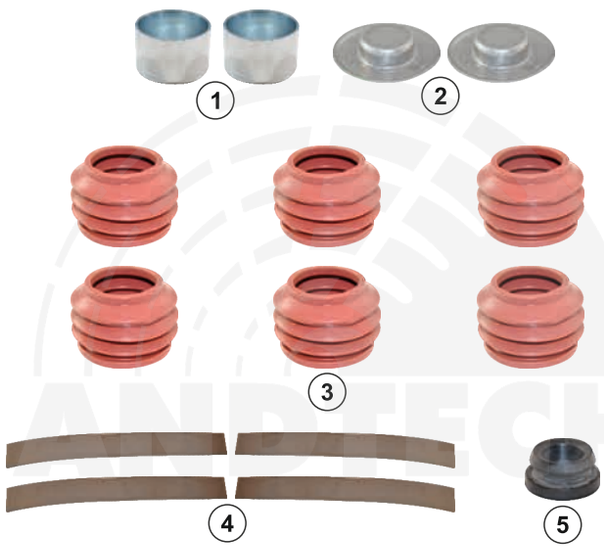

ANDTECH No :	0810 60104
Org. Ref. No :	91013 - 94660
Application :	MODUL X
Description :	Caliper Repair Kit
1- S105	Metal Tap (42x25mm)
2- S100	Metal Cap (57x13mm)
3- K122	Boot
4- P50	Teflon Bush
5- K123	Rubber Tap

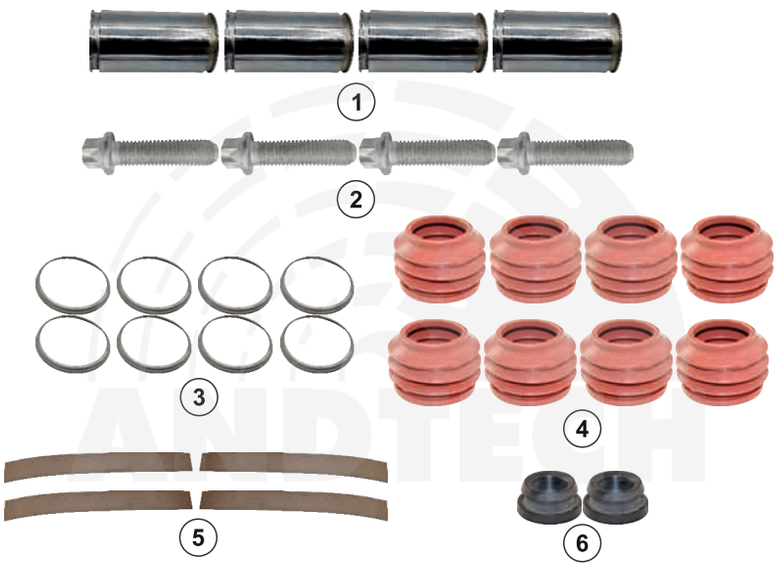

ANDTECH No :	0810 60167
Org. Ref. No :	91014
Application :	MARK III - MARK IV
Description :	Caliper Repair Kit
1- T631	Guide Pin Ø35x70mm
2- C74	Screw M14x2x53mm
3- S228	Ring
4- K122	Boot
5- P50	Teflon Bush
6- K123	Rubber Tap

www.andacotomotiv.com

All original numbers, marks and models from vehicle manufacturers listed in this catalogue are for comparison purposes only, and may not be used in invoices.

HALDEX

ANDTECH No :	0810 60105
Org. Ref. No :	91014
Application :	MODUL X
Description :	Caliper Repair Kit
1- S105	Metal Tap (42x25mm)
2- S100	Metal Cap (57x13mm)
3- K122	Boot
4- P50	Teflon Bush
5- K123	Rubber Tap

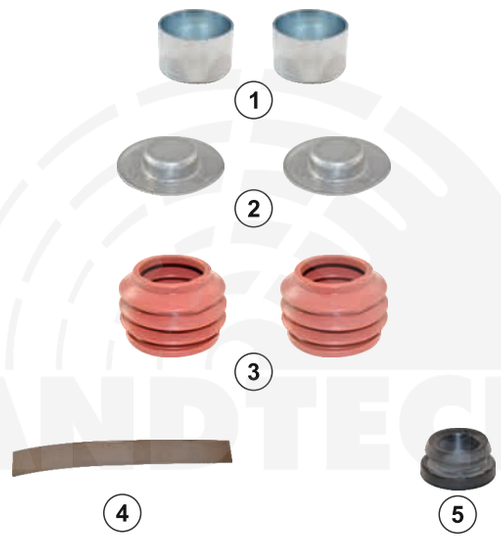

ANDTECH No :	0810 60160
Org. Ref. No :	87405
Application :	MARK III - MARK IV
Description :	Caliper Boot Kit
1- K70	Tapped Boot (Ø78mm)
2- S202	Spring
3- K123	Rubber Tap
4- SK24	Snap Ring
5- C108	Screw
6- K167	O-Ring
7- P62	Plug

ANDTECH No :	0810 60106
Org. Ref. No :	91011
Application :	MODUL X
Description :	Caliper Repair Kit
1- K121	Tappet Boot (Ø67mm)
2- S101	Spring
3- K123	Rubber Tap

www.andacotomotiv.com

All original numbers, marks and models from vehicle manufacturers listed in this catalogue are for comparison purposes only, and may not be used in invoices.

HALDEX

ANDTECH No :	0810 60164
Org. Ref. No :	94663
Application :	MARK III
Description :	Caliper Boot Kit
1- K70	Tapped Boot (Ø78mm)
2- K124	Rubber Tap
3- K123	Rubber Tap
4- SK24	Snap Ring
5- C108	Screw
6- K167	O-Ring
7- P62	Plug

ANDTECH No :	0810 60169
Org. Ref. No :	87408
Application :	MARK III - MARK IV
Description :	Caliper Repair Kit
1- P62	Plug
2- K167	O-Ring
3- C108	Screw
4- K123	Rubber Tap

ANDTECH No :	0810 60170
Org. Ref. No :	89925
Application :	MARK III
Description :	Caliper Plug Kit
1- K124	Rubber Tap
2- K123	Rubber Tap

www.andacotomotiv.com

All original numbers, marks and models from vehicle manufacturers listed in this catalogue are for comparison purposes only, and may not be used in invoices.

HALDEX

ANDTECH No :	0810 60171
Org. Ref. No :	94892
Application :	MODUL X
Description :	Caliper Plug Kit
1- K124	Rubber Tap
2- K123	Rubber Tap
3- T282	Adjuster Bolt

ANDTECH No :	0810 60168
Org. Ref. No :	89927
Application :	MARK III - MARK IV
Description :	Caliper Metal Tap
1- S227	Metal Tap (57x40mm)

ANDTECH No :	0810 60107
Org. Ref. No :	
Application :	MODUL X
Description :	Caliper Bridge
1- T286	Bridge
2- Y50	Bridge Spring

www.andacotomotiv.com

All original numbers, marks and models from vehicle manufacturers listed in this catalogue are for comparison purposes only, and may not be used in invoices.

HALDEX

ANDTECH No :	0810 60108
Org. Ref. No :	
Application :	MODUL X
Description :	Caliper Lever
1- T275	Lever

ANDTECH No :	0810 60109
Org. Ref. No :	
Application :	MODUL X
Description :	Caliper Adjusting Mechanism
1- T285	Adjusting Mechanism

ANDTECH No :	0810 60110
Org. Ref. No :	
Application :	MODUL X
Description :	Caliper Adjusting Mechanism Gear
1- T276	Adjusting Mechanism Gear

www.andacotomotiv.com

All original numbers, marks and models from vehicle manufacturers listed in this catalogue are for comparison purposes only, and may not be used in invoices.

HALDEX

ANDTECH No :	0810 60111
Org. Ref. No :	
Application :	MODUL X
Description :	Caliper Adjusting Gear
1- T277	Adjusting Gear

ANDTECH No :	0810 60112
Org. Ref. No :	
Application :	MODUL X
Description :	Caliper Intermediate Gear
1- T280	Intermediate Gear
2- S98	Wavy Washer
3- SK10	Snap Ring

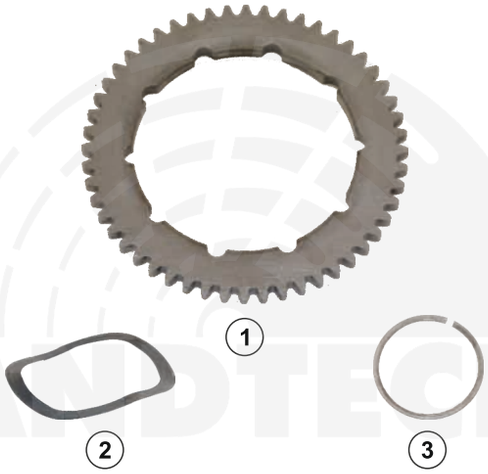

ANDTECH No :	0810 60113
Org. Ref. No :	
Application :	MODUL X
Description :	Caliper Tappet and Bolt Kit
1- T283	Calibration Bolt
2- B21	Bush (14x10mm)
3- T284	Tappet

www.andacotomotiv.com

HALDEX

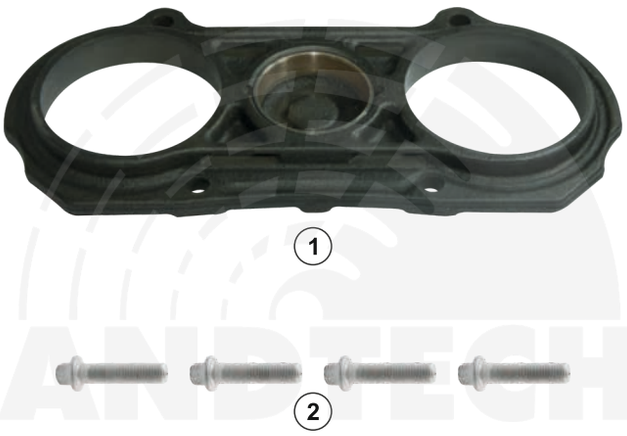

ANDTECH No :	0810 60114
Org. Ref. No :	
Application :	MODUL X
Description :	Caliper Cover Plate
1- T281	Cover Plate
2- C58	Cover Screw M8x1.25x30mm

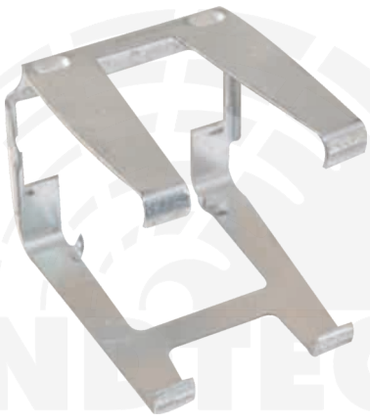

ANDTECH No :	0810 60115
Org. Ref. No :	
Application :	MODUL X
Description :	Caliper Locking Shim
1- S103	Locking Shim

ANDTECH No :	0810 60116
Org. Ref. No :	
Application :	MODUL X
Description :	Caliper Roller Bearing
1- R21	Roller Bearing
2- T279	Lever Pin

www.andacotomotiv.com

All original numbers, marks and models from vehicle manufacturers listed in this catalogue are for comparison purposes only, and may not be used in invoices.

HALDEX

ANDTECH No :	0810 60201
Org. Ref. No :	
Application :	MARK IV
Description :	Caliper Roller Bearing
1- R38	Roller Bearing

ANDTECH No :	0810 60117
Org. Ref. No :	
Application :	MODUL X
Description :	Caliper Roller Bearing
1- R21	Roller Bearing

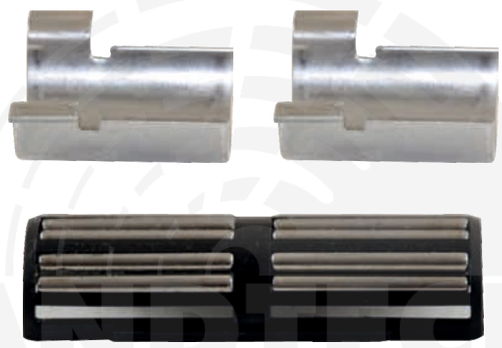

ANDTECH No :	0810 60118
Org. Ref. No :	
Application :	MODUL X
Description :	Caliper Roller Bearing
1- R22	Roller Bearing

www.andacotomotiv.com

HALDEX

ANDTECH No :	0810 60172
Org. Ref. No :	
Application :	MARK IV
Description :	Caliper Roller Bearing
1- R35	Roller Bearing

ANDTECH No :	0810 60119
Org. Ref. No :	90693
Application :	MODUL X
Description :	Caliper Adjuster Bolt Kit
1- T282	Adjuster Bolt
2- K123	Rubber Tap
3- K124	Seal

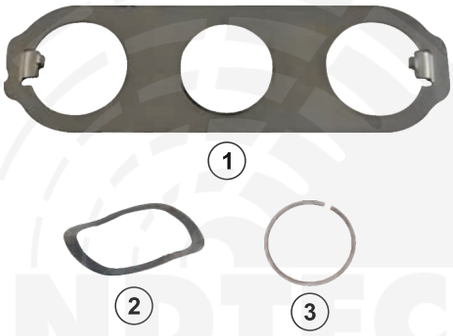

ANDTECH No :	0810 60120
Org. Ref. No :	
Application :	MODUL X
Description :	Caliper Locking Shim
1- S104	Locking Shim
2- S98	Wavy Washer
3- SK10	Snap Ring

www.andacotomotiv.com

All original numbers, marks and models from vehicle manufacturers listed in this catalogue are for comparison purposes only, and may not be used in invoices.

HALDEX

ANDTECH No :	0810 60121
Org. Ref. No :	91019
Application :	MODUL X
Description :	Caliper Metal Tap
1- S105	Metal Tap (42x25mm)

ANDTECH No :	0810 60122
Org. Ref. No :	90673
Application :	MODUL X
Description :	Caliper Pad Retainer
1- S102	Pad Retainer
2- C57	Screw M10x1.5x20mm

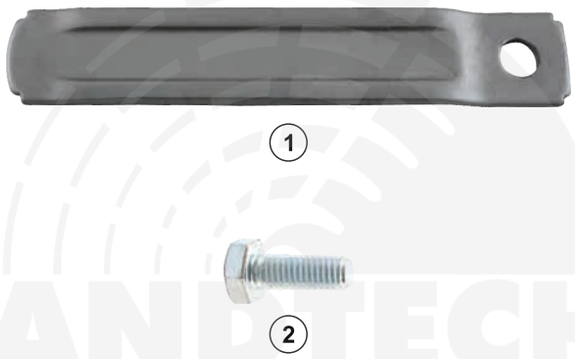

ANDTECH No :	0810 60202
Org. Ref. No :	91216
Application :	MODUL X
Description :	Caliper Pad Retainer
1- S102	Pad Retainer
2- C57	Screw M10x1.5x20mm
3- S233	Retention Spring

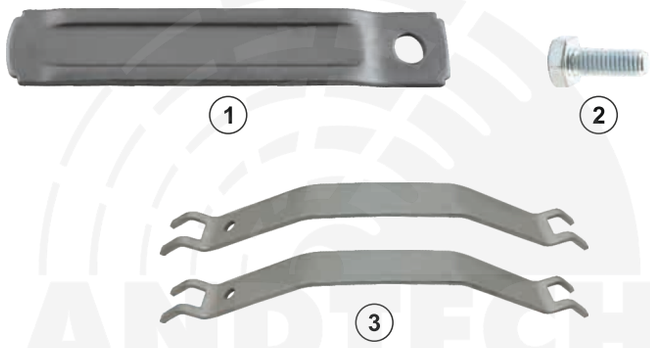

ANDTECH No :	0810 60123
Org. Ref. No :	
Application :	MODUL X
Description :	Caliper Carrier
1- T324	Carrier 22.5"

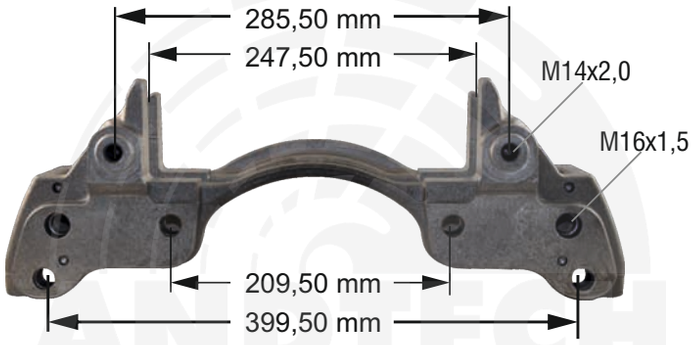

www.andacotomotiv.com

HALDEX

ANDTECH No :	0810 60124
Org. Ref. No :	
Application :	MODUL T, SAF SBS2220, KRONE DBT22LT
Description :	Caliper Calibration Mechanism Complete
1- T356	Caliper Mechanism Complete

ANDTECH No :	0810 60125
Org. Ref. No :	3 434 3861 00 - 95397 - 95054 KRONE 550017811
Application :	MODUL T, SAF SBS2220, KRONE DBT22LT
Description :	Caliper Repair Kit
1- T346	Guide Pin Ø35x120mm
2- T347	Guide Pin Ø35x87mm
3- C3	Screw M16x1,5x80mm
4- B50	Bush (39x30mm)
5- P45	Plastic Bush
6- K133	Boot
7- S136	Pin Cap Ø42x26mm
8- S137	Pin Cap Ø45x22mm
9- S30	Bush Retainer
10- P27	Plastic Ring
11- K135	Rubber Tap

ANDTECH No :	0810 60126
Org. Ref. No :	
Application :	MODUL T, SAF SBS2220, KRONE DBT22LT
Description :	Caliper Adjusting Mechanism
1- T355	Adjusting Mechanism
2- SK12	Snap Ring

www.andacotomotiv.com

All original numbers, marks and models from vehicle manufacturers listed in this catalogue are for comparison purposes only, and may not be used in invoices.

HALDEX

ANDTECH No :	0810 60157
Org. Ref. No :	
Application :	MODUL T, SAF SBS2220, KRONE DBT22LT
Description :	Caliper Adjusting Mechanism
1- T355	Adjusting Mechanism
2- SK12	Snap Ring
3- T350	Bearing House
4- R31	Center Bearing
5- R32	Adjuster Bearing

ANDTECH No :	0810 60127
Org. Ref. No :	
Application :	MODUL T, SAF SBS2220, KRONE DBT22LT
Description :	Caliper Bridge
1- T348	Bridge

ANDTECH No :	0810 60128
Org. Ref. No :	
Application :	MODUL T, SAF SBS2220, KRONE DBT22LT
Description :	Caliper Adjusting Gear
1- T349	Adjusting Gear

www.andacotomotiv.com

HALDEX

ANDTECH No :	0810 60129
Org. Ref. No :	
Application :	MODUL T, SAF SBS2220, KRONE DBT22LT
Description :	Caliper Lever
1- T353	Lever

ANDTECH No :	0810 60130
Org. Ref. No :	
Application :	MODUL T, SAF SBS2220, KRONE DBT22LT
Description :	Caliper Mechanism Bearing House
1- T351	Bearing House

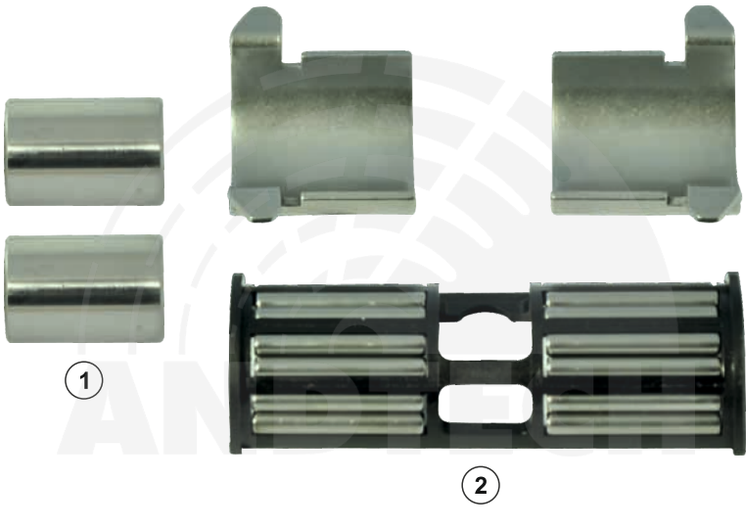

ANDTECH No :	0810 60131
Org. Ref. No :	
Application :	MODUL T, SAF SBS2220, KRONE DBT22LT
Description :	Caliper Roller Bearing Kit
1- T352	Lever Pin
2- R33	Top Bearing

www.andacotomotiv.com

All original numbers, marks and models from vehicle manufacturers listed in this catalogue are for comparison purposes only, and may not be used in invoices.

HALDEX

ANDTECH No :	0810 60132
Org. Ref. No :	
Application :	MODUL T, SAF SBS2220, KRONE DBT22LT
Description :	Caliper Roller Bearing
1- R34	Bottom Bearing

ANDTECH No :	0810 60133
Org. Ref. No :	
Application :	MODUL T, SAF SBS2220, KRONE DBT22LT
Description :	Caliper Bearing Repair Kit
1- R29	Side Bearing
2- R30	Center Bearing
3- R31	Center Bearing
4- R32	Adjuster Bearing

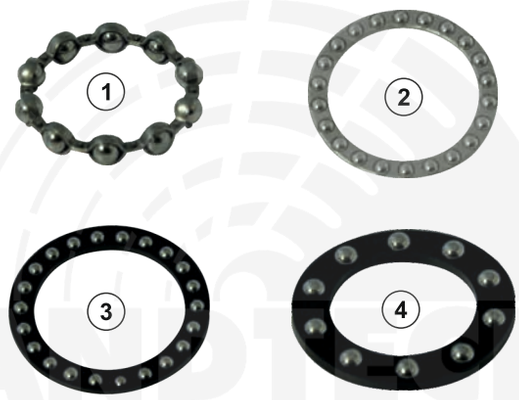

ANDTECH No :	0810 60134
Org. Ref. No :	
Application :	MODUL T, SAF SBS2220, KRONE DBT22LT
Description :	Caliper Bearing House
1- T350	Bearing House

www.andacotomotiv.com

HALDEX

ANDTECH No :	0810 60135
Org. Ref. No :	3 434 3863 00
Application :	MODUL T, SAF SBS2220, KRONE DBT22LT
Description :	Caliper Piston Boot
1- K134	Boot

ANDTECH No :	0810 60137
Org. Ref. No :	
Application :	MODUL T, SAF SBS2220, KRONE DBT22LT
Description :	Caliper Rubber Tap Kit
1- K135	Rubber Tap

ANDTECH No :	0810 60138
Org. Ref. No :	
Application :	MODUL T, SAF SBS2220, KRONE DBT22LT
Description :	Caliper Adjusting Gear Kit
1- P46	Adjusting Gear (Plastic)

ANDTECH No :	0810 60139
Org. Ref. No :	
Application :	MODUL T, SAF SBS2220, KRONE DBT22LT
Description :	Caliper Locking Plastic Kit
1- P49	Mechanism Locking Plastic

www.andacotomotiv.com

All original numbers, marks and models from vehicle manufacturers listed in this catalogue are for comparison purposes only, and may not be used in invoices.

HALDEX

ANDTECH No :	0810 60140
Org. Ref. No :	
Application :	MODUL T, SAF SBS2220, KRONE DBT22LT
Description :	Caliper Adjusting Gear Kit
1- P63	Adjusting Gear (Plastic)
2- K136	O-Ring

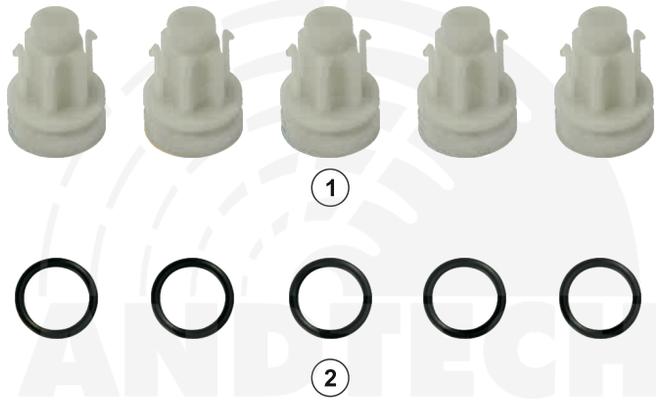

ANDTECH No :	0810 60136
Org. Ref. No :	
Application :	MODUL T, SAF SBS2220, KRONE DBT22LT
Description :	Caliper Rubber Tap Kit
1- K143	Rubber Tap

ANDTECH No :	0810 60141
Org. Ref. No :	
Application :	MODUL T, SAF SBS2220, KRONE DBT22LT
Description :	Caliper Repair Kit
1- K135	Rubber Tap
2- K136	O-Ring
3- K143	Rubber Tap
4- P63	Adjusting Gear (Plastic)

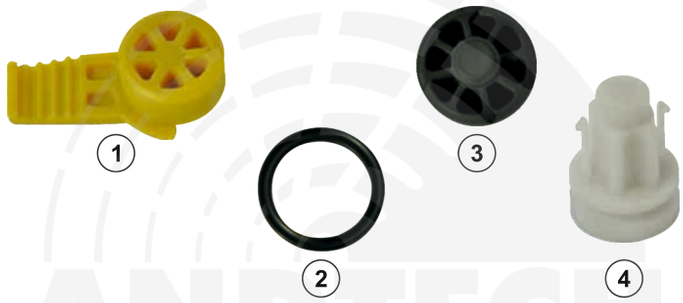

ANDTECH No :	0810 60142
Org. Ref. No :	
Application :	MODUL T, SAF SBS2220, KRONE DBT22LT
Description :	Caliper Repair Kit
1- T368	Washer
2- T374	Nut

www.andacotomotiv.com

HALDEX

ANDTECH No :	0810 60162
Org. Ref. No :	
Application :	MODUL T, SAF SB2220, KRONE DBT22LT
Description :	Caliper Protection Cap Kit
1- P94	Protection Cap

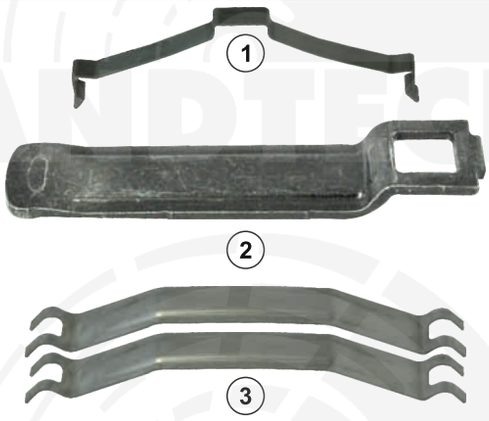

ANDTECH No :	0810 60143
Org. Ref. No :	
Application :	MODUL T, SAF SBS2220, DBT22LT
Description :	Caliper Pad Retainer Kit
1- S161	Locking Spring
2- S28	Pat Retainer
3- S160	Retention Spring

ANDTECH No :	0810 60144
Org. Ref. No :	
Application :	MODUL T, SAF SBS2220, KRONE DBT22LT
Description :	Caliper Pad Retainer
1- S28	Pad Retainer

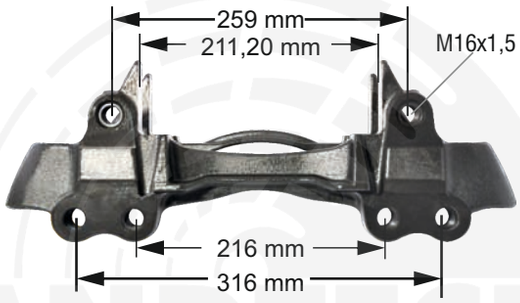

ANDTECH No :	0810 60145
Org. Ref. No :	94618 - 94619
Application :	MODUL T, SAF SBS2220, KRONE DBT22LT
Description :	Caliper Carrier
1- T370	Carrier 19.5"

ANDTECH No :	0810 60147
Org. Ref. No :	3 434 3862 00 - 95398 - KRONE 550017812
Application :	MODUL T, SAF SBS2220, KRONE DBT22LT
Description :	Caliper Adjusting Gear Kit
1- K135	Rubber Tap
2- K136	O-Ring
3- P63	Adjusting Gear (Plastic)

ANDTECH No :	0810 60148
Org. Ref. No :	95399 - KRONE 550017813 - 3434386300
Application :	MODUL T, SAF SBS2220, KRONE DBT22LT
Description :	Caliper Seal Kit
1- K134	Boot
2- K135	Rubber Tap

www.andacotomotiv.com

All original numbers, marks and models from vehicle manufacturers listed in this catalogue are for comparison purposes only, and may not be used in invoices.

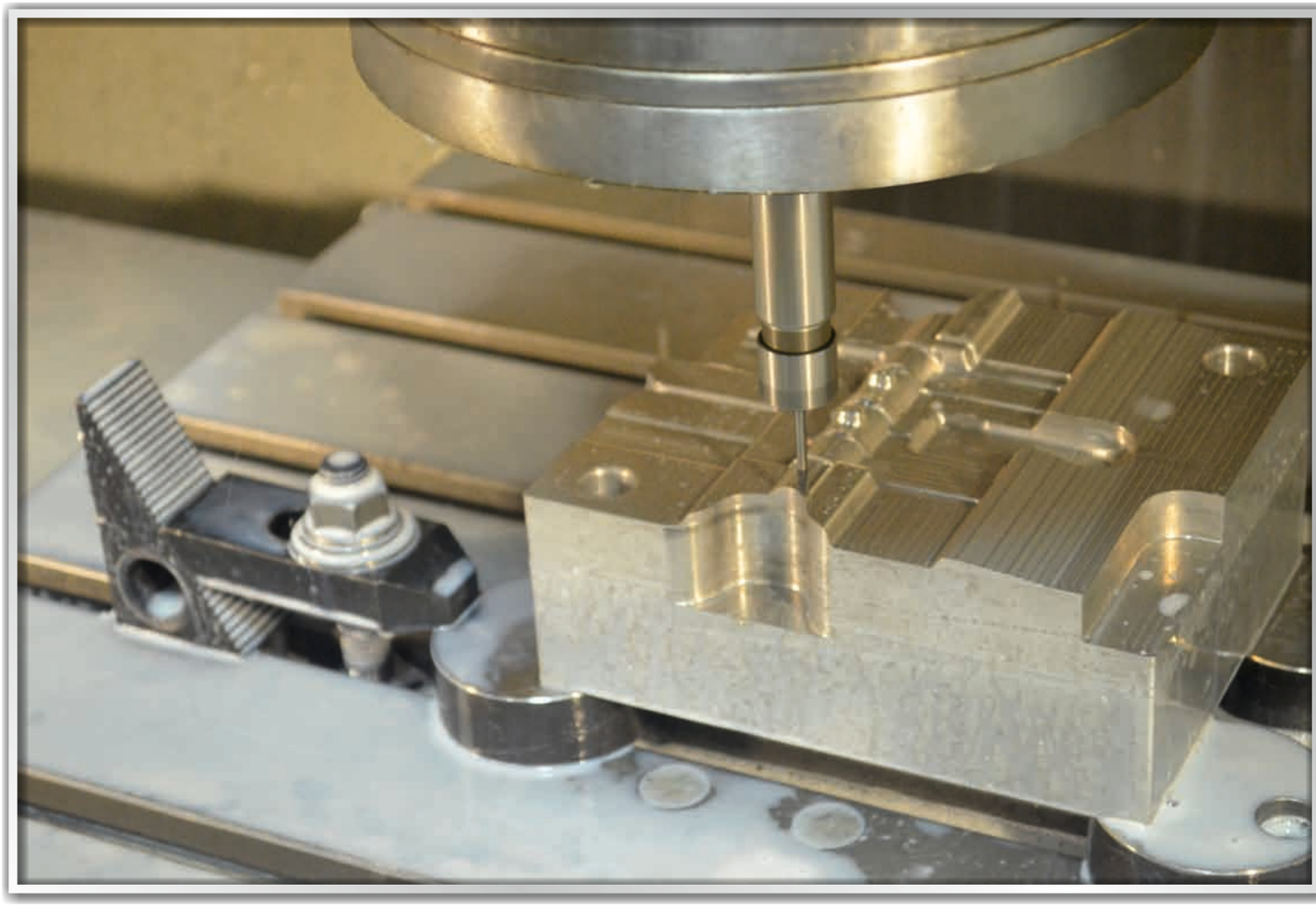

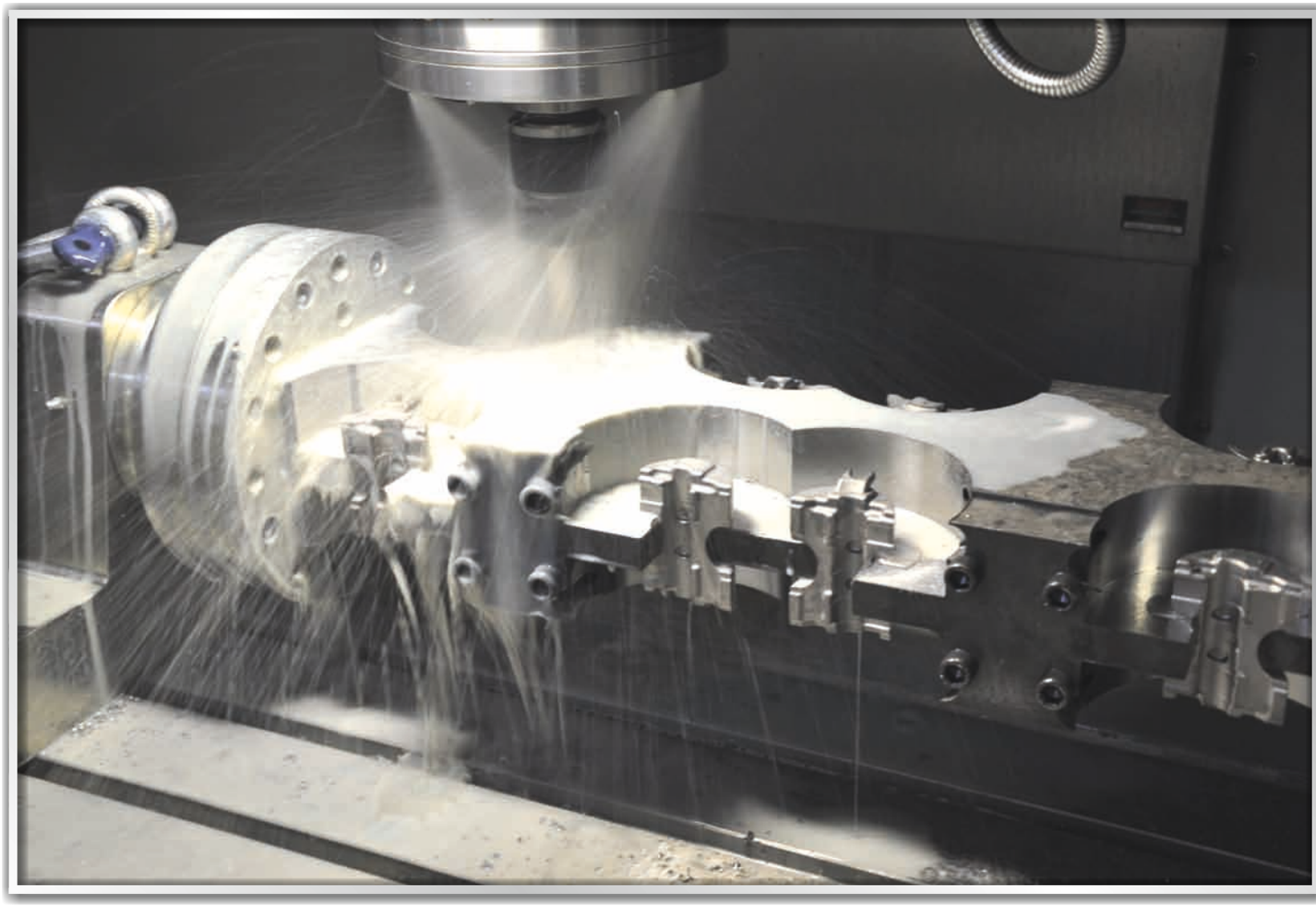

091
ANDAC

IVECO

ANDTECH No :	0810 40101
Org. Ref. No :	93161181
Application :	
Description :	Caliper Repair Kit
1- K36	Dust Cover
2- K36-1	Seal

ANDTECH No :	0810 40102
Org. Ref. No :	93161429
Application :	
Description :	Caliper Repair Kit
1- K37	Dust Cover
2- K37-1	Seal

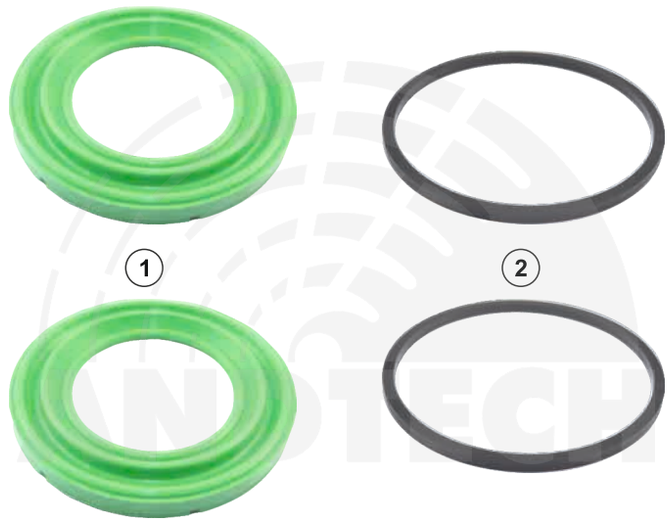

ANDTECH No :	0810 40103
Org. Ref. No :	93162033
Application :	
Description :	Caliper Piston Set
1- T79	Piston

www.andacotomotiv.com

All original numbers, marks and models from vehicle manufacturers listed in this catalogue are for comparison purposes only, and may not be used in invoices.

IVECO

ANDTECH No :	0810 40104
Org. Ref. No :	93160387
Application :	
Description :	Caliper Piston Set
1- T80	Piston

ANDTECH No :	0810 40105
Org. Ref. No :	93159285
Application :	
Description :	Caliper Piston
1- T81	Piston

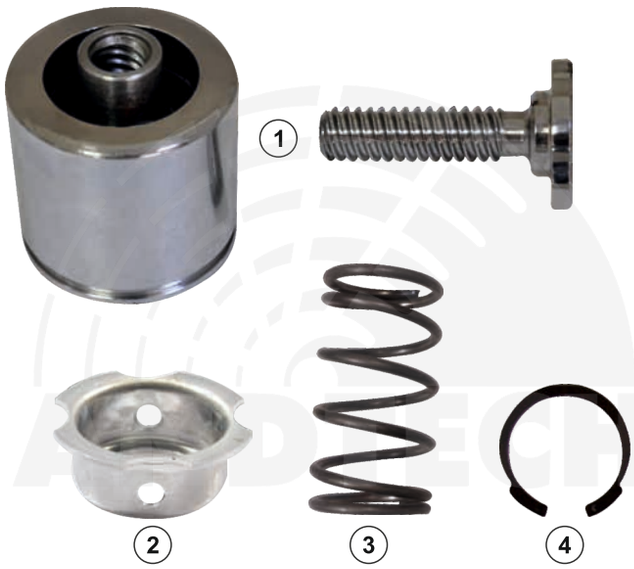

ANDTECH No :	0810 40106
Org. Ref. No :	93161244
Application :	
Description :	Caliper Repair Kit
1- T82	Piston
2- S43	Locking Shim
3- Y18	Spring
4- SK2	Snap Ring

www.andacotomotiv.com

All original numbers, marks and models from vehicle manufacturers listed in this catalogue are for comparison purposes only, and may not be used in invoices.

IVECO

ANDTECH No :	0810 40107
Org. Ref. No :	93161475
Application :	
Description :	Caliper Repair Kit
1- T83	Guide Pin Ø20x71mm
2- C19	Screw M12x1,25x85mm
3- K38	Boot
4- S12	Metal Tap
5- T127	Screw

ANDTECH No :	0810 40108
Org. Ref. No :	93161471
Application :	ROR - EUROCARGO
Description :	Caliper Repair Kit
1- K95	Boot
2- K96	O-Ring
3- S12	Metal Tap
4- K97	Seal
5- K98	O-Ring
6- K99	O-Ring
7- K38	Boot
8- K100	O-Ring
9- SK4	Snap Ring
10- SK5	Snap Ring
11- T127	Screw

ANDTECH No :	0810 40109
Org. Ref. No :	93161192
Application :	
Description :	Caliper Repair Kit
1- K78	Boot
2- P6	Teflon
3- K79	Boot
4- S57	Metal Ring
5- K80	Boot
6- S44	Metal Ring
7- S45	Metal Ring

www.andacotomotiv.com

All original numbers, marks and models from vehicle manufacturers listed in this catalogue are for comparison purposes only, and may not be used in invoices.

IVECO

ANDTECH No :	0810 40110
Org. Ref. No :	93161189
Application :	ADB 3700 / ADB 4300
Description :	Caliper Repair Kit
1- T84	Guide Pin
2- C20	Screw M22x1,5x175mm
3- T85	Guide Pin
4- C21	Screw M16x1,5x1,25mm
5- K43	Bush
6- B15	Bush

ANDTECH No :	0810 40111
Org. Ref. No :	93161559
Application :	ADB 3700 / ADB 4300
Description :	Pad Retainer Assembly
1- Y9	Spring
2- Y8	Clamping Element
3- T165	Adjusting Tool
4- Y7	Wire Spring
5- T86	Bolt
6- Y6	Clip
7- S13	Pad Spring

ANDTECH No :	0810 40112
Org. Ref. No :	93161908
Application :	
Description :	Caliper Repair Kit
1- S13	Locking Shim
2- T166	Pin

www.andacotomotiv.com

All original numbers, marks and models from vehicle manufacturers listed in this catalogue are for comparison purposes only, and may not be used in invoices.

IVECO

ANDTECH No :	0810 40113
Org. Ref. No :	93161622 - 93162114
Application :	Ø 410 Simplex
Description :	Brake Repair Kit
1- T87	Piston
2- T91	Drive Bush (41 Thread)
3- T92	Adjuster Clip
4- T93	Brake Adjuster
5- K44	Boot
6- Y11	Spring
7- Y10	Spring

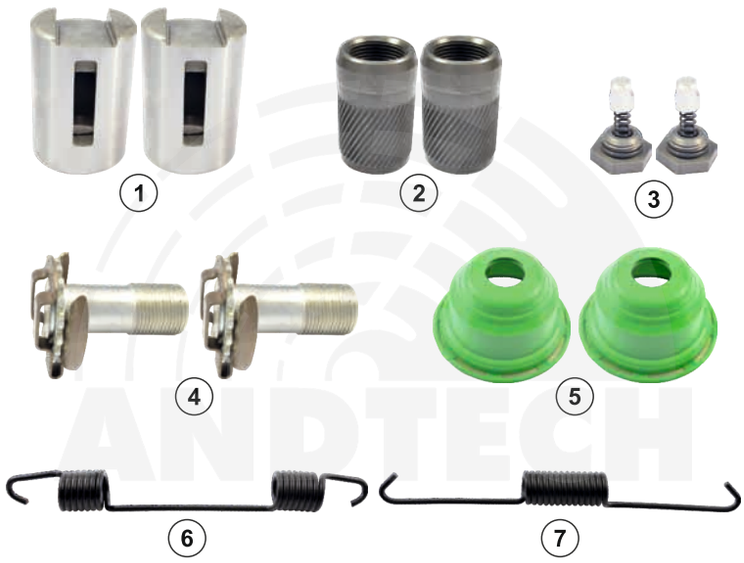

ANDTECH No :	0810 40114
Org. Ref. No :	42491950 - RBSK 0502
Application :	Ø 394/381 Duplex
Description :	Brake Repair Kit
1- T88	Piston
2- T92	Adjuster Clip
3- T90	Drive Bush (54 Thread)
4- Y19	Spring
5- T167	Brake Adjuster
6- K45	Boot

ANDTECH No :	0810 40115
Org. Ref. No :	93161623 - RBSK 1407
Application :	Ø 410 Simplex
Description :	Brake Repair Kit
1- T87	Piston
2- T91	Drive Bush (41 Thread)
3- T92	Adjuster Clip

www.andacotomotiv.com

IVECO

ANDTECH No :	0810 40116
Org. Ref. No :	42491974
Application :	
Description :	Brake Repair Kit (Short)
1- T88	Piston
2- T90	Drive Bush (54 Thread)
3- T92	Adjuster Clip

ANDTECH No :	0810 40117
Org. Ref. No :	42536195
Application :	
Description :	Brake Repair Kit
1- T87	Piston
2- T89	Drive Bush (54 Thread)
3- T92	Adjuster Clip

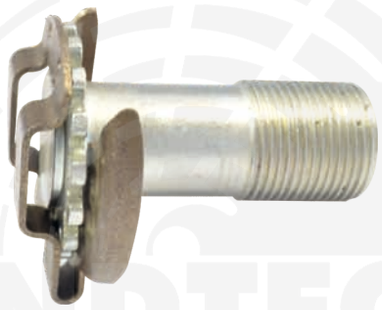

ANDTECH No :	0810 40118
Org. Ref. No :	42531676 - A22297E5907
Application :	Ø 410 Simplex
Description :	Brake Adjuster
1- T93	Brake Adjuster

www.andacotomotiv.com

All original numbers, marks and models from vehicle manufacturers listed in this catalogue are for comparison purposes only, and may not be used in invoices.

IVECO

ANDTECH No :	0810 40119
Org. Ref. No :	42480059 - A2297L3158 - A164002
Application :	Ø 394/381 Duplex
Description :	Brake Adjuster
1- T167	Brake Adjuster

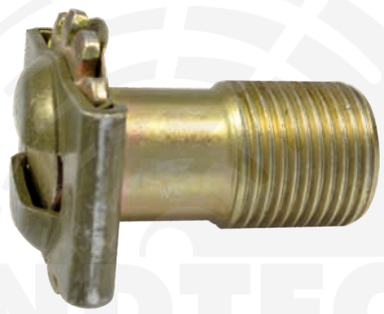

ANDTECH No :	0810 40120
Org. Ref. No :	42480060 - 3280Y8163
Application :	Ø 394/381 Duplex
Description :	Piston
1- T87	Piston

ANDTECH No :	0810 40121
Org. Ref. No :	42537366
Application :	
Description :	Brake Repair Kit (Left)
1- T95	Plunger
2- T92	Adjuster Clip
3- K44	Boot

www.andacotomotiv.com

IVECO

ANDTECH No :	0810 40122
Org. Ref. No :	42537365
Application :	
Description :	Brake Repair Kit (Right)
1- T94	Plunger
2- T92	Adjuster Clip
3- K44	Boot

ANDTECH No :	0810 40123
Org. Ref. No :	7980405
Application :	
Description :	Brake Piston Kit (Left)
1- T95	Plunger
2- T92	Adjuster Clip
3- K46	Boot

ANDTECH No :	0810 40124
Org. Ref. No :	7980406
Application :	
Description :	Brake Piston Kit (Right)
1- T94	Plunger
2- T92	Adjuster Clip
3- K46	Boot

www.andacotomotiv.com

All original numbers, marks and models from vehicle manufacturers listed in this catalogue are for comparison purposes only, and may not be used in invoices.

IVECO

ANDTECH No :	0810 40125
Org. Ref. No :	7984216
Application :	
Description :	Plunger (Right)
1- T94	Plunger

ANDTECH No :	0810 40126
Org. Ref. No :	7984217
Application :	
Description :	Plunger (Left)
1- T95	Plunger

ANDTECH No :	0810 40127
Org. Ref. No :	7980408
Application :	
Description :	Boot Kit
1- K46	Boot
2- K45	Boot

www.andacotomotiv.com

IVECO

ANDTECH No :	0810 40128
Org. Ref. No :	42488735 - 1205B1666 - 166045
Application :	Ø 394/381 Duplex
Description :	Boot
1- K45	Boot

ANDTECH No :	0810 40129
Org. Ref. No :	42488736 - 1205C1667 - 166046
Application :	Ø 394/381 Duplex
Description :	Boot
1- K46	Boot

ANDTECH No :	0810 40130
Org. Ref. No :	42531677 - 1205x2000 - 6C462B009AA
Application :	Ø 394/381 Duplex
Description :	Boot
1- K44	Boot

www.andacotomotiv.com

All original numbers, marks and models from vehicle manufacturers listed in this catalogue are for comparison purposes only, and may not be used in invoices.

IVECO

ANDTECH No :	0810 40131
Org. Ref. No :	42488484 - 2257Y1143 - 6C462D160AA
Application :	
Description :	Clip
1- S46	Clip

ANDTECH No :	0810 40132
Org. Ref. No :	7980407 - RBSK0250
Application :	Ø 394/381 Duplex
Description :	Brake Wedge Kit
1- T96	Brake Wedge

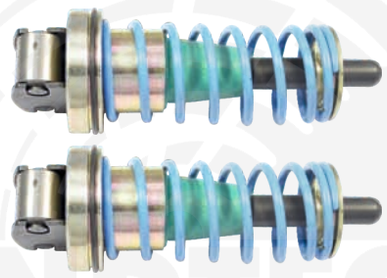

ANDTECH No :	0810 40133
Org. Ref. No :	93161621 - RBSK1255 - RBSK2051
Application :	Ø 410 Simplex
Description :	Brake Wedge Kit
1- T97	Brake Wedge

www.andacotomotiv.com

IVECO

ANDTECH No :	0810 40134
Org. Ref. No :	93161254 - 12999418VT
Application :	
Description :	Brake Cylinder Kit
1- K47	Boot
2- T98	Brake Adjuster
3- S47	Wavy Ring
4- S48	Washer

ANDTECH No :	0810 40135
Org. Ref. No :	8124815 - 12999135VT
Application :	
Description :	Brake Cylinder Kit
1- T203	Calibration Gear
2- T204	Calibration Gear
3- T205	Calibration Bolt
4- T206	Spring-pin
5- Y30	Spring
6- Y31	Spring

ANDTECH No :	0810 40136
Org. Ref. No :	42538062
Application :	
Description :	Piston Repair Kit
1- T163	Piston 7^0
2- T164	Piston 0^0

www.andacotomotiv.com

All original numbers, marks and models from vehicle manufacturers listed in this catalogue are for comparison purposes only, and may not be used in invoices.

IVECO

ANDTECH No :	0810 40143
Org. Ref. No :	WVA 29011 - 1908231
Application :	IVECO
Description :	Pad Indicator Kit
1- T86	Bolt
2- KB012	Indicator Cable
3- Y6	Clip

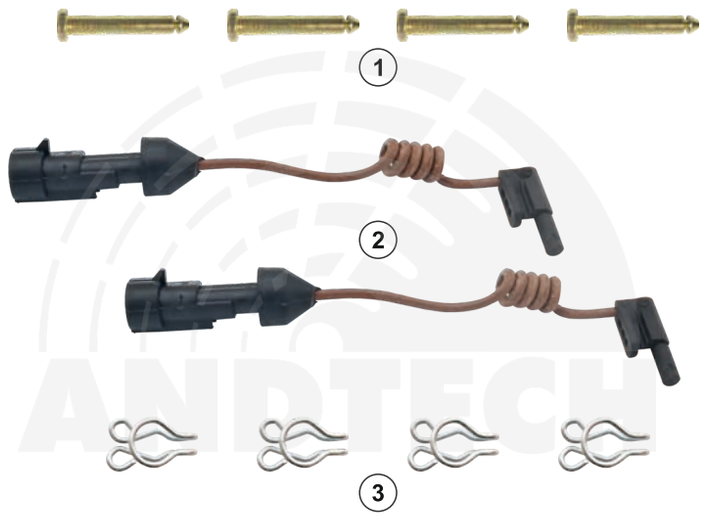

ANDTECH No :	0810 40144
Org. Ref. No :	WVA 29032 - 1908231
Application :	IVECO
Description :	Pad Retainer Kit
1- T86	Bolt
2- Y6	Clip

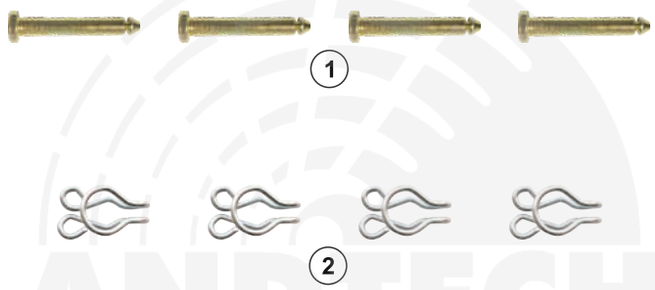

www.andacotomotiv.com

All original numbers, marks and models from vehicle manufacturers listed in this catalogue are for comparison purposes only, and may not be used in invoices.

ANDAC

EROGLU
kesmak

Z-CAM

ANDTECH No :	0810 50101
Org. Ref. No :	68192115 - 3097092 - 1696444 - 5001868113 - 9C462296AA
Application :	Z-CAM
Description :	Return Spring
1- T112	Return Spring

ANDTECH No :	0810 50102
Org. Ref. No :	68192487 - 30972299 - 1698346 - 9C462069AA
Application :	Z-CAM
Description :	Return Spring Pin
1- T113	Return Spring Pin

ANDTECH No :	0810 50103
Org. Ref. No :	3090997 - 1081819
Application :	Z-CAM
Description :	Adjusting Pinion (Left)
1- T102	Adjusting Pinion

www.andacotomotiv.com

Z-CAM

ANDTECH No :	0810 50104
Org. Ref. No :	3090998 - 1081820
Application :	Z-CAM
Description :	Adjusting Pinion (Right)
1- T103	Adjusting Pinion

ANDTECH No :	0810 50105
Org. Ref. No :	68191219 - 272910 - 5001868121 - 9C462458AA
Application :	Z-CAM
Description :	Cross Shaft
1- T108	Cross Shaft

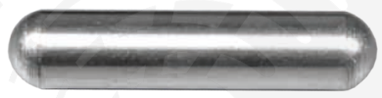

ANDTECH No :	0810 50106
Org. Ref. No :	64225252 - 1696446 - 5001868120 - 9C462B003AA
Application :	Z-CAM
Description :	Thrust Pin
1- T114	Thrust Pin

www.andacotomotiv.com

All original numbers, marks and models from vehicle manufacturers listed in this catalogue are for comparison purposes only, and may not be used in invoices.

Z-CAM

ANDTECH No :	0810 50107
Org. Ref. No :	68192566 - 272908 - 3097100 - 8550977 - 9C462A105BA
Application :	Z-CAM
Description :	Adjusting Gear (Right)
1- T100	Adjusting Gear

ANDTECH No :	0810 50108
Org. Ref. No :	68162565 - 272909 - 3097099 - 8550978 - 9C462A105AA
Application :	Z-CAM
Description :	Adjusting Gear (Left)
1- T101	Adjusting Gear

ANDTECH No :	0810 50109
Org. Ref. No :	272904
Application :	Z-CAM
Description :	Adjusting Gear Cap
1- S54	Gear Cap

www.andacotomotiv.com

All original numbers, marks and models from vehicle manufacturers listed in this catalogue are for comparison purposes only, and may not be used in invoices.

Z-CAM

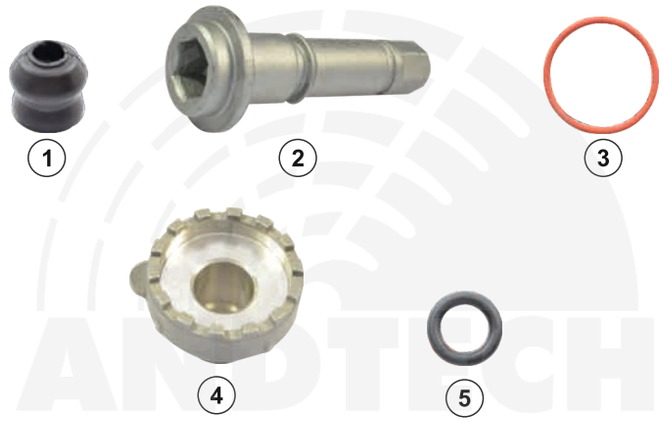

ANDTECH No :	0810 50110
Org. Ref. No :	276099
Application :	Z-CAM
Description :	Lock Cap Repair Kit (Big Thread)
1- K81	Boot
2- T168	Pin
3- K82	O-Ring
4- T109	Cap (Big Thread)
5- K83	O-Ring

ANDTECH No :	0810 50111
Org. Ref. No :	276100 - 3090964
Application :	Z-CAM
Description :	Lock Cap Repair Kit (Thin Thread)
1- K81	Boot
2- T168	Pin
3- K82	O-Ring
4- T110	Cap (Thin Thread)
5- K83	O-Ring

ANDTECH No :	0810 50122
Org. Ref. No :	276100 - 3090964
Application :	Z-CAM
Description :	Caliper Repair Kit (Thin Thread)
1- K81	Boot
2- T168	Pin
3- K82	O-Ring
4- T636	Cap (Thin Thread)
5- K83	O-Ring

www.andacotomotiv.com

All original numbers, marks and models from vehicle manufacturers listed in this catalogue are for comparison purposes only, and may not be used in invoices.

Z-CAM

ANDTECH No :	0810 50112
Org. Ref. No :	276096
Application :	Z-CAM
Description :	Lock Cap Repair Kit
1- K84	O-Ring
2- T169	Pin
3- K85	O-Ring
4- T111	Cap (Without Tube)

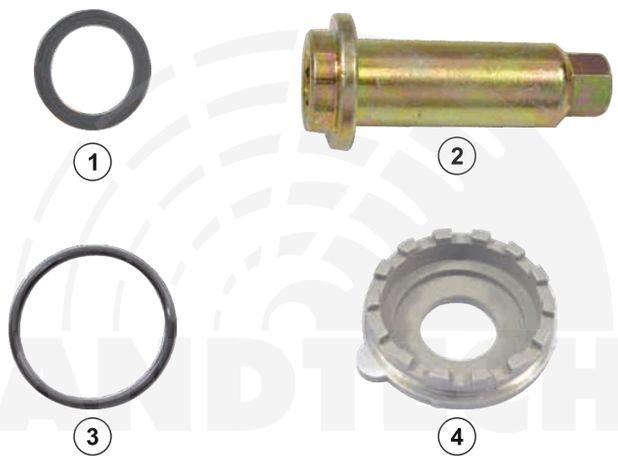

ANDTECH No :	0810 50113
Org. Ref. No :	1696449 - 1696450
Application :	Z-CAM
Description :	Cover and Gasket
1- T115	Cover
2- CN2	Gasket

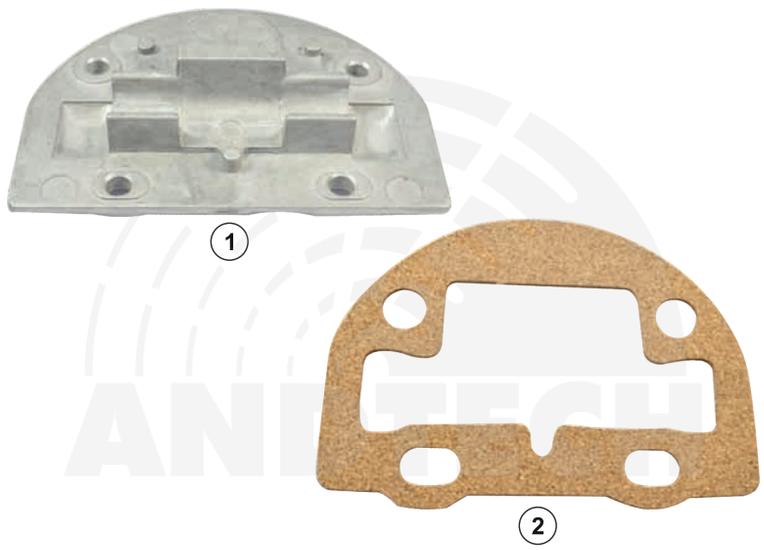

ANDTECH No :	0810 50114
Org. Ref. No :	68191541 - 276098 - 9C462K400BA
Application :	Z-CAM
Description :	Reverse Lock Repair Kit (Right)
1- S67	Locking Shim
2- Y32	Locking Spring

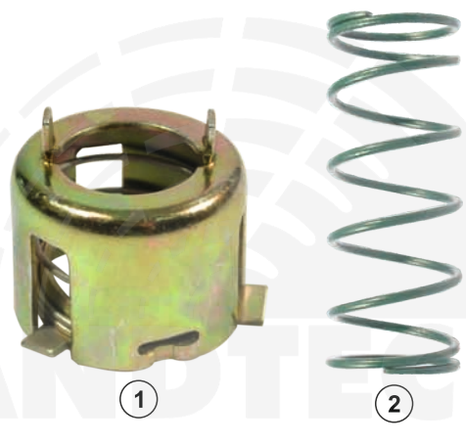

www.andacotomotiv.com

All original numbers, marks and models from vehicle manufacturers listed in this catalogue are for comparison purposes only, and may not be used in invoices.

Z-CAM

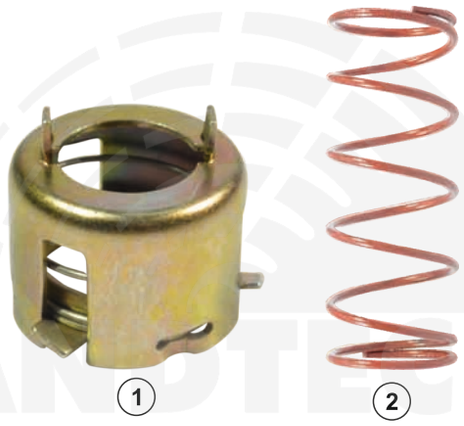

ANDTECH No :	0810 50115
Org. Ref. No :	68191540 - 276097 - 9C462K400AA
Application :	Z-CAM
Description :	Reverse Lock Repair Kit (Left)
1- S68	Locking Shim
2- Y33	Locking Spring

ANDTECH No :	0810 50116
Org. Ref. No :	68192410 - 3090954 - 1696448 - 5001868119 - 9C462B009AA
Application :	Z-CAM
Description :	Dust Cover
1- K48	Dust Cover

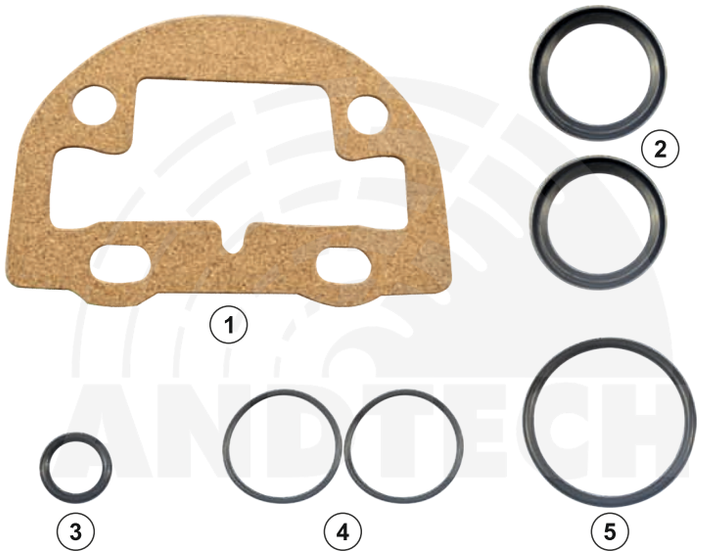

ANDTECH No :	0810 50117
Org. Ref. No :	272905
Application :	Z-CAM
Description :	Gasket Kit
1- CN2	Gasket
2- K102	Seal
3- K103	O-Ring
4- K104	O-Ring
5- K105	O-Ring

www.andacotomotiv.com

All original numbers, marks and models from vehicle manufacturers listed in this catalogue are for comparison purposes only, and may not be used in invoices.

Z-CAM

ANDTECH No :	0810 50118
Org. Ref. No :	68191511 - 1696925 - 272907 - 5001868125 - 9C462K161AA
Application :	Z-CAM
Description :	Pinion (Right) (New Model)
1- T104	Pinion

ANDTECH No :	0810 50119
Org. Ref. No :	68191510 - 1696924 - 272906 - 5001868126 - 9C462K161BA
Application :	Z-CAM
Description :	Pinion (Left) (New Model)
1- T105	Pinion

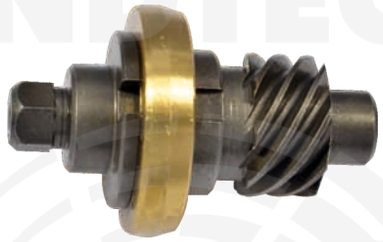

ANDTECH No :	0810 50120
Org. Ref. No :	68191510 - 1696924 - 5001868126
Application :	Z-CAM
Description :	Pinion (Left) (Old Model)
1- T106	Pinion

ANDTECH No :	0810 50121
Org. Ref. No :	68191511 - 1696925 - 5001868125
Application :	Z-CAM
Description :	Pinion (Right) (Old Model)
1- T107	Pinion

ANDTECH No :	GRS01
Org. Ref. No :	
Application :	
Description :	Grease
1- GRS01	Grease

www.andacotomotiv.com

CROSS REFERENCE LIST

GROUP	ANDTECH NO	CROSS REFERENCE	PAGE
KNORR	0810 10101		11
KNORR	0810 10102		11
KNORR	0810 10103	K092079 - K001300 - K010603 - K000366 - 1689313 - 81508226031 - 0004204982 - 1756389 - 0004202382 - 802119 BENDIX - 3434381400	12
KNORR	0810 10104		12
KNORR	0810 10105	II370760065 - A0004201382	13
KNORR	0810 10106		13
KNORR	0810 10107	K000944 - K010604 - 81508226032 - 1759811 - 3434380400 - 14489130	14
KNORR	0810 10108	II304130065 - 0004200682 - 81508226007 - 00042042480	14
KNORR	0810 10110		15
KNORR	0810 10111	K046523 - A000 423 0316 - K108004K50 - K108004K64 - K108004K62 - 1227579 - 34343823000	16
KNORR	0810 10112	K001929 - 81508226027 - 00042042820	16
KNORR	0810 10113		17
KNORR	0810 10114		18
KNORR	0810 10115		18
KNORR	0810 10116		19
KNORR	0810 10117		19
KNORR	0810 10118		19
KNORR	0810 10119		20
KNORR	0810 10120		20
KNORR	0810 10121		21
KNORR	0810 10122		21
KNORR	0810 10123		21
KNORR	0810 10124		22
KNORR	0810 10125		22
KNORR	0810 10126		22
KNORR	0810 10127		23
KNORR	0810 10128		23
KNORR	0810 10129		23
KNORR	0810 10130		23
KNORR	0810 10131		24
KNORR	0810 10132		24
KNORR	0810 10133		24
KNORR	0810 10134		25
KNORR	0810 10135		25
KNORR	0810 10136		25
KNORR	0810 10137		26
KNORR	0810 10138		26
KNORR	0810 10139		26
KNORR	0810 10140		27
KNORR	0810 10141		27
KNORR	0810 10142		27
KNORR	0810 10143		29
KNORR	0810 10144		28
KNORR	0810 10145		30
KNORR	0810 10146		29
KNORR	0810 10147		30
KNORR	0810 10148		30
KNORR	0810 10149		31
KNORR	0810 10150		32
KNORR	0810 10151		32
KNORR	0810 10152		33
KNORR	0810 10153		33
KNORR	0810 10154		34
KNORR	0810 10155		35
KNORR	0810 10156		35
KNORR	0810 10157		36
KNORR	0810 10158		36
KNORR	0810 10159		37
KNORR	0810 10160		37
KNORR	0810 10161		38

www.andacotomotiv.com

All original numbers, marks and models from vehicle manufacturers listed in this catalogue are for comparison purposes only, and may not be used in invoices.

CROSS REFERENCE LIST

GROUP	ANDTECH NO	CROSS REFERENCE	PAGE
KNORR	0810 10162		39
KNORR	0810 10163		41
KNORR	0810 10164		40
KNORR	0810 10165		46
KNORR	0810 10166		46
KNORR	0810 10167		47
KNORR	0810 10168		57
KNORR	0810 10169		59
KNORR	0810 10171		60
KNORR	0810 10172	II328090062 - II339680062 - II369100062 - 0004200782 - 0004201282 - 81508226009 - 1390427 - 1448915 - 93162048 - 0501211763	60
KNORR	0810 10173	K000687 - 1603326	60
KNORR	0810 10174	K000935	61
KNORR	0810 10175		62
KNORR	0810 10176	K000132 - II304130062 - 97131439	62
KNORR	0810 10177		63
KNORR	0810 10178	II179320062	63
KNORR	0810 10179		61
KNORR	0810 10180	II197140062	63
KNORR	0810 10181	II197330062 - 1390426	64
KNORR	0810 10182		73
KNORR	0810 10183		90
KNORR	0810 10184		91
KNORR	0810 10185	II328090061	92
KNORR	0810 10186	II368470064 - II339830064 - 1448910	78
KNORR	0810 10187		79
KNORR	0810 10188	K001928 - 81508226026	71
KNORR	0810 10189	K001274	71
KNORR	0810 10190		58
KNORR	0810 10191		58
KNORR	0810 10192	K067417K50 - 3434382000	65
KNORR	0810 10193	K031844K50 - 1906779 - K011117	64
KNORR	0810 10194	K004100 - 3434381500 - K010766 - 0004205082 - 803114 BENDIX	69
KNORR	0810 10195		70
KNORR	0810 10196	K013007	74
KNORR	0810 10197	K000365 - 0004202282	59
KNORR	0810 10198	K000472 - 42541412 - 81508226019 - 81508226034 - 1527631 - 3434381200 - 0004203482	65
KNORR	0810 10199	K000472 - 42541412 - 81508226019	66
KNORR	0810 10200	K000375	66
KNORR	0810 10201	K000375	66
KNORR	0810 10202	K001532	67
KNORR	0810 10203	K001532	67
KNORR	0810 10204		67
KNORR	0810 10207	II39769F0062 - 42537451	68
KNORR	0810 10208	K001915 - 1639100 - K048389K50 - 81508226037 - 81.50822-6037	68
KNORR	0810 10209		72
KNORR	0810 10210	K000696 - II310370066 - 0024200383 - 0980102970	72
KNORR	0810 10211		73
KNORR	0810 10212		73
KNORR	0810 10213		78
KNORR	0810 10214		72
KNORR	0810 10215	K000697	79
KNORR	0810 10216		79
KNORR	0810 10217	K000698	79
KNORR	0810 10218		80
KNORR	0810 10219		80
KNORR	0810 10220		80
KNORR	0810 10221		80
KNORR	0810 10222		81
KNORR	0810 10223		81
KNORR	0810 10224		81

www.andacotomotiv.com

CROSS REFERENCE LIST

GROUP	ANDTECH NO	CROSS REFERENCE	PAGE
KNORR	0810 10225		82
KNORR	0810 10226		82
KNORR	0810 10227		82
KNORR	0810 10228		83
KNORR	0810 10229		77
KNORR	0810 10230	K001301 - 81508226025	84
KNORR	0810 10231	II39769F0063 - 34343806000	84
KNORR	0810 10232	K000945 - II17934004 - 81508226024 - 14394993	84
KNORR	0810 10233	K000029 - 0004234687 - 81508226021	85
KNORR	0810 10234	K003902 - 802643 BENDIX - 3434381600	85
KNORR	0810 10235		86
KNORR	0810 10236	II19712004 - K000129 - 6274200186 - 0004202482	87
KNORR	0810 10237		83
KNORR	0810 10238		35
KNORR	0810 10239	Z001548 - 802455 BENDIX	35
KNORR	0810 10240		93
KNORR	0810 10241		90
KNORR	0810 10242		90
KNORR	0810 10243		91
KNORR	0810 10244	1448600, 1415149, 1527631, 1477675, 0980106330, 42541412, Z004357	92
KNORR	0810 10245	K004679 - 01.303.88.55.0 - 2379695	98
KNORR	0810 10246		34
KNORR	0810 10247		34
KNORR	0810 10248		92
KNORR	0810 10249		93
KNORR	0810 10250		93
KNORR	0810 10251		93
KNORR	0810 10252		44
KNORR	0810 10253		45
KNORR	0810 10254	K001502	95
KNORR	0810 10255	K001529 - K001530 - 0004213706	95
KNORR	0810 10256		33
KNORR	0810 10257		77
KNORR	0810 10258		76
KNORR	0810 10259		28
KNORR	0810 10260		83
KNORR	0810 10261		33
KNORR	0810 10262		38
KNORR	0810 10263		39
KNORR	0810 10264		41
KNORR	0810 10265		42
KNORR	0810 10266		42
KNORR	0810 10267		43
KNORR	0810 10268		43
KNORR	0810 10269		43
KNORR	0810 10270		44
KNORR	0810 10271		47
KNORR	0810 10272		47
KNORR	0810 10273		48
KNORR	0810 10274		48
KNORR	0810 10275		49
KNORR	0810 10276		49
KNORR	0810 10277		50
KNORR	0810 10278		50
KNORR	0810 10279		51
KNORR	0810 10280		51
KNORR	0810 10281		52
KNORR	0810 10282		52
KNORR	0810 10283		53
KNORR	0810 10284		53
KNORR	0810 10285		54
KNORR	0810 10286		55

www.andacotomotiv.com

All original numbers, marks and models from vehicle manufacturers listed in this catalogue are for comparison purposes only, and may not be used in invoices.

CROSS REFERENCE LIST

GROUP	ANDTECH NO	CROSS REFERENCE	PAGE
KNORR	0810 10287		56
KNORR	0810 10288		57
KNORR	0810 10289		62
KNORR	0810 10290	II358510062 - 1415149 - 0004201182 - 0501211047	61
KNORR	0810 10291		64
KNORR	0810 10292		92
KNORR	0810 10293		36
KNORR	0810 10294	K010813 - 3434382400	70
KNORR	0810 10295	K012912	74
KNORR	0810 10296	K060760	74
KNORR	0810 10297	K006018	75
KNORR	0810 10298	K048276	75
KNORR	0810 10299	K048278	75
KNORR	0810 10300	K003459	76
KNORR	0810 10301	K047473	76
KNORR	0810 10302		81
KNORR	0810 10303	K001470 - 0004203482	59
KNORR	0810 10304	3434382000 - K048434K62	68
KNORR	0810 10305	K048371K50	69
KNORR	0810 10306	K048396K50 - K118520 BENDIX	69
KNORR	0810 10307		83
KNORR	0810 10308		77
KNORR	0810 10309		78
KNORR	0810 10310		85
KNORR	0810 10311	K000133	86
KNORR	0810 10312	II40929F	87
KNORR	0810 10313	II40699F	87
KNORR	0810 10314	II40875F	87
KNORR	0810 10315	K001925 - 0004204382 - K028451	71
KNORR	0810 10316	K047474	90
KNORR	0810 10317		94
KNORR	0810 10318	II350470063	91
KNORR	0810 10319		15
KNORR	0810 10320		45
KNORR	0810 10321		45
KNORR	0810 10322	K561521	91
KNORR	0810 10323		41
KNORR	0810 10324		42
KNORR	0810 10325		42
KNORR	0810 10326		82
KNORR	0810 10327	K000027 - 0004230606 - 2121592	95
KNORR	0810 10328	K000026 - 0004211106	95
KNORR	0810 10329	K052379 - 0004231006	96
KNORR	0810 10330	K001926 - 0004213106 - K000690 - JAE0110402006	96
KNORR	0810 10331	K000358 - 0004211606	96
KNORR	0810 10332	K001278	96
KNORR	0810 10333	K005606	97
KNORR	0810 10334	K010765 - 1756388	97
KNORR	0810 10335	K001510 - K108814	97
KNORR	0810 10336	K011479 - 1689314 - K001528 - 1521259	97
KNORR	0810 10337	K004099 - 212600	98
KNORR	0810 10338	K004680 - 01.303.88.57.0	98
KNORR	0810 10339	01.303.88.56.0 - K012619	98
KNORR	0810 10340	K001105	99
KNORR	0810 10341	K001497	99
KNORR	0810 10342	K004206	100
KNORR	0810 10343		28
KNORR	0810 10344		29
KNORR	0810 10345		31
KNORR	0810 10347	WVA 29115 - 29116 - 29148	88
KNORR	0810 10351		84
KNORR	0810 10353		32

www.andacotomotiv.com

CROSS REFERENCE LIST

GROUP	ANDTECH NO	CROSS REFERENCE	PAGE
KNORR	0810 10354		34
KNORR	0810 10355		86
KNORR	0810 10356	WVA 29087	88
KNORR	0810 10357	K046498 - 0004215706	100
KNORR	0810 10359		37
KNORR	0810 10360		40
KNORR	0810 10363		44
KNORR	0810 10364		11
KNORR	0810 10365	K092079 - K001300 - K010603 - K000366 - 1689313 - 81508226031 - 0004204982 - 1756389 - 0004202382 - 802119 BENDIX - 3434381400	12
KNORR	0810 10366		13
KNORR	0810 10367	K000944 - K010604 - 81508226032 - 1759811 - 3434380400 - 14489130	14
KNORR	0810 10368		15
KNORR	0810 10369	K046523 - A000 423 0316 - K108004K50 - K108004K64 - K108004K62 - 1227579 - 3434382300	16
KNORR	0810 10370		46
KNORR	0810 10371		46
KNORR	0810 10372	K108002K50 - 3434382400	70
KNORR	0810 10373		94
KNORR	0810 10374		94
KNORR	0810 10377		40
KNORR	0810 10379		43
KNORR	0810 10380		94
KNORR	0810 10381		44
KNORR	0810 10382	K015308	99
KNORR	0810 10383		41
KNORR	0810 10384		36
KNORR	0810 10385		37
KNORR	0810 10386		38
KNORR	0810 10387		38
KNORR	0810 10388		39
KNORR	0810 10389		39
KNORR	0810 10390		40
KNORR	0810 10391		45
KNORR	0810 10392		20
KNORR	0810 10393	K017549 M2-M1	17
KNORR	0810 10394	K017549 M2-M1	17
KNORR	0810 10395	K017549 M2-M1	18
KNORR	0810 10396	K017549 M2-M1	31
KNORR	0810 10397	K017549 M2-M1	47
KNORR	0810 10398	K046764K50 - 000 421 5806 - 0004215806	100
KNORR	0810 10399	WVA29087 - 29163 - 29179 - 29105 - 29106 - 29108 - 20109	89
KNORR	0810 10400	WVA 29087 - 29163 - 29179 - 29105 - 29106 - 29108 - 20109	89
KNORR	0810 10402	2286677 - K105599K55	65
KNORR	0810 10403	WVA29244 - 29246 - A0064205320	89
KNORR	0810 10404		32
MERITOR	0810 20101	MCK1192	110
MERITOR	0810 20102		106
MERITOR	0810 20103		111
MERITOR	0810 20104		122
MERITOR	0810 20105		109
MERITOR	0810 20106	MCK1294	119
MERITOR	0810 20107	MCK1172	106
MERITOR	0810 20109		118
MERITOR	0810 20110		123
MERITOR	0810 20111		123
MERITOR	0810 20112		125
MERITOR	0810 20113		125
MERITOR	0810 20114		126
MERITOR	0810 20115		126
MERITOR	0810 20116		122
MERITOR	0810 20117		116

www.andacotomotiv.com

All original numbers, marks and models from vehicle manufacturers listed in this catalogue are for comparison purposes only, and may not be used in invoices.

CROSS REFERENCE LIST

GROUP	ANDTECH NO	CROSS REFERENCE	PAGE
MERITOR	0810 20118		117
MERITOR	0810 20119	MCK1291 - DSL5R	114
MERITOR	0810 20120	MCK1290 - DSL5L	114
MERITOR	0810 20121	MCK1293 - DSB6R	112
MERITOR	0810 20122	MCK1292 - DSB6L	112
MERITOR	0810 20123	MCK1171	105
MERITOR	0810 20124	MCK1261	105
MERITOR	0810 20125		124
MERITOR	0810 20126		125
MERITOR	0810 20127		123
MERITOR	0810 20128	MCK1160 - 21224954	127
MERITOR	0810 20129	MCK1161 - 21224955	127
MERITOR	0810 20130		128
MERITOR	0810 20131		128
MERITOR	0810 20132	MCK1344 - DSB3	128
MERITOR	0810 20133	MCK1154	130
MERITOR	0810 20134	MCK1159	130
MERITOR	0810 20135		131
MERITOR	0810 20136		131
MERITOR	0810 20137		132
MERITOR	0810 20138		132
MERITOR	0810 20139	15224836SR	133
MERITOR	0810 20140	15224837SR	133
MERITOR	0810 20141		148
MERITOR	0810 20142	68324625	148
MERITOR	0810 20143		148
MERITOR	0810 20144		149
MERITOR	0810 20145		149
MERITOR	0810 20146		149
MERITOR	0810 20147		150
MERITOR	0810 20148		150
MERITOR	0810 20149		150
MERITOR	0810 20150		152
MERITOR	0810 20151		152
MERITOR	0810 20152	MCK1113 - SJ4110 - 85102093 - 3092267	153
MERITOR	0810 20153	MCK1111 - SJ4102 - 85102095 - 3092265	153
MERITOR	0810 20154	MCK1112 - SJ4103 - 85102096 - 3092266	153
MERITOR	0810 20155	68322297PK10	154
MERITOR	0810 20156	MCK1237 - 3092263	154
MERITOR	0810 20157		154
MERITOR	0810 20158	MCK1236 - 3092262	155
MERITOR	0810 20159		155
MERITOR	0810 20160		155
MERITOR	0810 20161		156
MERITOR	0810 20162		156
MERITOR	0810 20163		156
MERITOR	0810 20164		157
MERITOR	0810 20165		157
MERITOR	0810 20166		157
MERITOR	0810 20167		158
MERITOR	0810 20168		158
MERITOR	0810 20169		158
MERITOR	0810 20170		159
MERITOR	0810 20171		159
MERITOR	0810 20172		160
MERITOR	0810 20173		160
MERITOR	0810 20174		161
MERITOR	0810 20175		161
MERITOR	0810 20176		161
MERITOR	0810 20177		162
MERITOR	0810 20178		162
MERITOR	0810 20179		164

www.andacotomotiv.com

CROSS REFERENCE LIST

GROUP	ANDTECH NO	CROSS REFERENCE	PAGE
MERITOR	0810 20180		164
MERITOR	0810 20181		165
MERITOR	0810 20182		165
MERITOR	0810 20183		165
MERITOR	0810 20184		166
MERITOR	0810 20185		166
MERITOR	0810 20186	SJ4113 - 3092763	166
MERITOR	0810 20187	SJ4114 - 3092764	167
MERITOR	0810 20188	MCK1151 - MCK1021 - 85104827	167
MERITOR	0810 20189	MCK1152 - MCK1022 - 85104828	167
MERITOR	0810 20190		168
MERITOR	0810 20191		168
MERITOR	0810 20192		168
MERITOR	0810 20193		169
MERITOR	0810 20194	SJ4031 - 8550893 - 69029760 - 6553778 - 6553779	169
MERITOR	0810 20195		169
MERITOR	0810 20196		170
MERITOR	0810 20197		170
MERITOR	0810 20198		170
MERITOR	0810 20199	SJ4074 - 3098111	171
MERITOR	0810 20200	SJ4073 - 3098110	171
MERITOR	0810 20201		171
MERITOR	0810 20202		172
MERITOR	0810 20203		172
MERITOR	0810 20204		172
MERITOR	0810 20205		173
MERITOR	0810 20206		173
MERITOR	0810 20207		173
MERITOR	0810 20208		174
MERITOR	0810 20209		174
MERITOR	0810 20210		174
MERITOR	0810 20211		175
MERITOR	0810 20212		175
MERITOR	0810 20213	SJ4098 - 3092261	176
MERITOR	0810 20214	SJ4112 - 3092329	176
MERITOR	0810 20215		177
MERITOR	0810 20216		177
MERITOR	0810 20217		177
MERITOR	0810 20218	SJ4096 - MCK1398 - 85109975 - 3092258 - 21109753	178
MERITOR	0810 20219	SJ4097 - MCK1399 - 85109976 - 3092259 - 21109754	178
MERITOR	0810 20220		179
MERITOR	0810 20221		179
MERITOR	0810 20222		179
MERITOR	0810 20223		180
MERITOR	0810 20224	SJ4108 - 21109755 - 3092260 - 85109977	180
MERITOR	0810 20225		180
MERITOR	0810 20226	SJ4018	181
MERITOR	0810 20227		181
MERITOR	0810 20228	SJ4077 - 30981090	184
MERITOR	0810 20229	MCK1139 - 85107913 - 81508026024	184
MERITOR	0810 20230	ST1156 - 81508026016	184
MERITOR	0810 20231	MCK1238 - 3092264	185
MERITOR	0810 20232	MCK1309 - 5001866398	185
MERITOR	0810 20233		185
MERITOR	0810 20234	MCK1118 - 85102092	186
MERITOR	0810 20235	MCK1116 - 85102094	186
MERITOR	0810 20236	MCK1135 - 85103891	187
MERITOR	0810 20237	MCK1134 - 85103892	187
MERITOR	0810 20238	MCK1298 - 85109890 - 5001866989	187
MERITOR	0810 20239	MCK1254	188
MERITOR	0810 20240		188
MERITOR	0810 20241	MCK1317 - 85109889 - 5001866385	189

www.andacotomotiv.com

All original numbers, marks and models from vehicle manufacturers listed in this catalogue are for comparison purposes only, and may not be used in invoices.

CROSS REFERENCE LIST

GROUP	ANDTECH NO	CROSS REFERENCE	PAGE
MERITOR	0810 20242	SJ4052 - 5001845385	189
MERITOR	0810 20243	SJ4076 - MCK1104 - 5001837006 - 3098108	189
MERITOR	0810 20244	MCK1102 - 81508026017 - 81508026020 - 81508026021	190
MERITOR	0810 20245	MCK1103 - 81508026022	191
MERITOR	0810 20246	MCK1243 - MCK1140 - 5001860791 - 85107912 - 81508026025	191
MERITOR	0810 20247	MCK1086 - 5001858717	192
MERITOR	0810 20248	SJ4011 - MCK1213 - 0004200676 - 81508026008 - 81508026009 - SJ1228	193
MERITOR	0810 20249	SJ4001 - 5001822994	193
MERITOR	0810 20251	SJ4078 - 3098113 - 3097526	194
MERITOR	0810 20252	SJ4061	194
MERITOR	0810 20253	MCK1244 - 5001860792	194
MERITOR	0810 20254	MCK1299 - 3095628 - 85107718	195
MERITOR	0810 20255	MCK1065	195
MERITOR	0810 20256	MCK1310 - 85109892 - 5001868400	196
MERITOR	0810 20257	MCK1253 - 884368	197
MERITOR	0810 20258		197
MERITOR	0810 20259		199
MERITOR	0810 20260	MCK1129 - 85102099	199
MERITOR	0810 20261	68322900PK10	200
MERITOR	0810 20262	68321678PK	207
MERITOR	0810 20263	SJ1212 - 5001831176 - 81508026007 - 0004230082	208
MERITOR	0810 20264	654147780414PK	210
MERITOR	0810 20265		210
MERITOR	0810 20266		211
MERITOR	0810 20267		211
MERITOR	0810 20268		211
MERITOR	0810 20269	68320507PK10	212
MERITOR	0810 20270	SJ4109 - 3092270	200
MERITOR	0810 20271		201
MERITOR	0810 20272	MCK1041 - 3095669	201
MERITOR	0810 20273		201
MERITOR	0810 20274	SJ4105 - 3092269	202
MERITOR	0810 20275	68322774	202
MERITOR	0810 20276	68324270	203
MERITOR	0810 20277		203
MERITOR	0810 20278	68322655PK10	204
MERITOR	0810 20279	3092282	204
MERITOR	0810 20280	68323746PK10	205
MERITOR	0810 20281		205
MERITOR	0810 20282		205
MERITOR	0810 20283		205
MERITOR	0810 20284	68320912 - 68321272 - 0004230062 - 81.50822.0003 - 5001822997 - 8285388449 - 746871 - 0501314109	206
MERITOR	0810 20285	68915080 - 68915081	206
MERITOR	0810 20286	SJ4117 - 3092765	206
MERITOR	0810 20287		212
MERITOR	0810 20288	SJ4111 - 3092283	213
MERITOR	0810 20289	MCK1296 - MCK1311 - 85109883 - KIT225207 - 225207	213
MERITOR	0810 20290		213
MERITOR	0810 20291	68322300PK	207
MERITOR	0810 20292	MCK1174 - 5001858719 - 5001866486 - 85107958 - KIT225210 - 225210	214
MERITOR	0810 20293	MCK1262	214
MERITOR	0810 20294	MCK1264	214
MERITOR	0810 20295	MCK1263	214
MERITOR	0810 20296		152
MERITOR	0810 20297		178
MERITOR	0810 20298		122
MERITOR	0810 20299		109
MERITOR	0810 20300		109
MERITOR	0810 20301		129
MERITOR	0810 20302	1488186 - 1205 X 2572 - 21225226	129
MERITOR	0810 20303		175

www.andacotomotiv.com

All original numbers, marks and models from vehicle manufacturers listed in this catalogue are for comparison purposes only, and may not be used in invoices.

CROSS REFERENCE LIST

GROUP	ANDTECH NO	CROSS REFERENCE	PAGE
MERITOR	0810 20304	KIT225221 - 225221	198
MERITOR	0810 20305	MCK1323	188
MERITOR	0810 20306		103
MERITOR	0810 20307		104
MERITOR	0810 20308		134
MERITOR	0810 20309		135
MERITOR	0810 20310		136
MERITOR	0810 20311		137
MERITOR	0810 20312		138
MERITOR	0810 20313	MCK1289	191
MERITOR	0810 20314		139
MERITOR	0810 20315		140
MERITOR	0810 20316		141
MERITOR	0810 20317		142
MERITOR	0810 20318		143
MERITOR	0810 20319		144
MERITOR	0810 20320		145
MERITOR	0810 20321		146
MERITOR	0810 20322		147
MERITOR	0810 20323		190
MERITOR	0810 20324		190
MERITOR	0810 20325		192
MERITOR	0810 20326	SJ4021 - 8550881	198
MERITOR	0810 20327		208
MERITOR	0810 20328		209
MERITOR	0810 20329		192
MERITOR	0810 20333		208
MERITOR	0810 20334		209
MERITOR	0810 20335		209
MERITOR	0810 20336		210
MERITOR	0810 20337		202
MERITOR	0810 20338		203
MERITOR	0810 20339	MCK1240	213
MERITOR	0810 20340	MCK1352- MST1504	207
MERITOR	0810 20341	SJ4053	184
MERITOR	0810 20342	KIT225200 - 225200	195
MERITOR	0810 20343	KIT225201 - 225201	196
MERITOR	0810 20344	MCK1067 - 3095626	198
MERITOR	0810 20345		199
MERITOR	0810 20346	68322562PK	206
MERITOR	0810 20347	68322563PK	207
MERITOR	0810 20348	MCK1193	111
MERITOR	0810 20349		111
MERITOR	0810 20350		110
MERITOR	0810 20351		107
MERITOR	0810 20352	MCK1168	119
MERITOR	0810 20353	DSB104	110
MERITOR	0810 20354	DSB7	108
MERITOR	0810 20355		108
MERITOR	0810 20356		186
MERITOR	0810 20357	SJ4032	193
MERITOR	0810 20358	MCK1088 - 5001858718	197
MERITOR	0810 20359	MCK1185 - 68323215	133
MERITOR	0810 20360	MCK1138 - MCK1146 - MCK1247 - MCK1248 - MCK1368 - 81508026023 - 5001858713 - 85107910 - 321561193	218
MERITOR	0810 20361	MCK1297 - MCK1322 - 63827466	219
MERITOR	0810 20362		219
MERITOR	0810 20363	68323675 - 68323676 - 321501720	219
MERITOR	0810 20364		220
MERITOR	0810 20365	68324854PK10	184
MERITOR	0810 20366	MCK1087	196
MERITOR	0810 20367		107

www.andacotomotiv.com

All original numbers, marks and models from vehicle manufacturers listed in this catalogue are for comparison purposes only, and may not be used in invoices.

CROSS REFERENCE LIST

GROUP	ANDTECH NO	CROSS REFERENCE	PAGE
MERITOR	0810 20368		210
MERITOR	0810 20369		211
MERITOR	0810 20370		212
MERITOR	0810 20371		212
MERITOR	0810 20372		113
MERITOR	0810 20373		113
MERITOR	0810 20374		184
MERITOR	0810 20375		160
MERITOR	0810 20379		151
MERITOR	0810 20380		151
MERITOR	0810 20381		181
MERITOR	0810 20396		182
MERITOR	0810 20399		183
MERITOR	0810 20400		182
MERITOR	0810 20401	MCK1127 - 85102097	182
MERITOR	0810 20405	MCK1319 - 85109887 - 5001866988 - 68327462	220
MERITOR	0810 20406		117
MERITOR	0810 20407		117
MERITOR	0810 20408		114
MERITOR	0810 20409		115
MERITOR	0810 20410		183
MERITOR	0810 20411	MCK1128 - 85102098	183
MERITOR	0810 20412	WVA 29090 - 3093919	216
MERITOR	0810 20413		162
MERITOR	0810 20414		163
MERITOR	0810 20415		163
MERITOR	0810 20416	MCK1211	163
MERITOR	0810 20417	MCK1212	164
MERITOR	0810 20422		129
MERITOR	0810 20450	WVA 29174 - MBA112	215
MERITOR	0810 20454		151
MERITOR	0810 20466		204
MERITOR	0810 20467	68322485PK10	200
MERITOR	0810 20469		176
MERITOR	0810 20470	68322778 – 1489072 – 3092253 – 68322849	220
MERITOR	0810 20471	MCK1336	115
MERITOR	0810 20472	MCK1337	116
MERITOR	0810 20473		108
MERITOR	0810 20476		118
MERITOR	0810 20477		124
MERITOR	0810 20478		124
MERITOR	0810 20479		126
MERITOR	0810 20480		127
MERITOR	0810 20481		120
MERITOR	0810 20482		120
MERITOR	0810 20483		121
MERITOR	0810 20484		121
MERITOR	0810 20487		132
MERITOR	0810 20489	WVA 29125 - 20768092 - 3095396	215
MERITOR	0810 20490	WVA 29131 - 68324072	216
MERITOR	0810 20491	WVA 29131	215
MERITOR	0810 20492	WVA 29090 - 3093919	216
MERITOR	0810 20493	WVA 29090 - 3093919	217
MERITOR	0810 20495	WVA 29174 - 68325408	217
MERITOR	0810 20496	WVA 29124 - MBA100	132
MERITOR	0810 20497	WVA 29083	217
MERITOR	0810 20498	WVA 29083	218
MERITOR	0810 20499	WVA 29137	218
WABCO	0810 30101		223
WABCO	0810 30102		223
WABCO	0810 30103		224
WABCO	0810 30104		225

www.andacotomotiv.com

CROSS REFERENCE LIST

GROUP	ANDTECH NO	CROSS REFERENCE	PAGE
WABCO	0810 30105		225
WABCO	0810 30106		226
WABCO	0810 30107		227
WABCO	0810 30108		227
WABCO	0810 30109		228
WABCO	0810 30110		228
WABCO	0810 30111		229
WABCO	0810 30112		229
WABCO	0810 30113		230
WABCO	0810 30114		230
WABCO	0810 30115	12999729VT - 81508006023 - 082139200 - 11015566 - 1517354	230
WABCO	0810 30116		231
WABCO	0810 30117		232
WABCO	0810 30118		233
WABCO	0810 30119		234
WABCO	0810 30120	12999738VT - 1505890 - 3434382701 - 79787365 - 6402259212	235
WABCO	0810 30121		235
WABCO	0810 30122	12999776 - 34344382800 - 1628065 - 1068119 - 6500700 - 501866626 - 85108166	235
WABCO	0810 30123	6402259212- 640 225 921 2	236
WABCO	0810 30124	12999678VT - 5021170488 - 0865966	236
WABCO	0810 30125	12999746VT - 1440505 - 5001858722 - 261112999746VT	236
WABCO	0810 30126		237
WABCO	0810 30127		237
WABCO	0810 30128		238
WABCO	0810 30129		238
WABCO	0810 30130		239
WABCO	0810 30131		239
WABCO	0810 30132		239
WABCO	0810 30133		240
WABCO	0810 30134		240
WABCO	0810 30135		240
WABCO	0810 30136		241
WABCO	0810 30137		241
WABCO	0810 30138		242
WABCO	0810 30139		243
WABCO	0810 30140		243
WABCO	0810 30141		244
WABCO	0810 30142		245
WABCO	0810 30143	12999699VT - 12999702 - 1436853 - 42536957	245
WABCO	0810 30144	12999704VT - 5001852880 - 1519363 - 261112999704VT	245
WABCO	0810 30145	12999580VT - 81508226003 - 1517407	246
WABCO	0810 30146		246
WABCO	0810 30147	6401759202	246
WABCO	0810 30148		247
WABCO	0810 30149		247
WABCO	0810 30150		248
WABCO	0810 30151		248
WABCO	0810 30152		248
WABCO	0810 30153	6401759202 - 3434382900 - 0906197 - 13C3508278AB	249
WABCO	0810 30154	6402259262 - 640 225 926 2	249
WABCO	0810 30155	6402259262 - 640 225 926 2	249
WABCO	0810 30156	6401959362 - 640 195 936 2	250
WABCO	0810 30157	6401959362 - 640 195 936 2	250
WABCO	0810 30158	6401759402 - 640 175 940 2	250
WABCO	0810 30159	6401759402 - 640 175 940 2	250
WABCO	0810 30160	6401759402 - 640 175 940 2	251
WABCO	0810 30161	6401759402 - 640 175 940 2	251
WABCO	0810 30162		280
WABCO	0810 30163		280
WABCO	0810 30164		280
WABCO	0810 30165		280
WABCO	0810 30166		281

www.andacotomotiv.com

All original numbers, marks and models from vehicle manufacturers listed in this catalogue are for comparison purposes only, and may not be used in invoices.

CROSS REFERENCE LIST

GROUP	ANDTECH NO	CROSS REFERENCE	PAGE
WABCO	0810 30167		281
WABCO	0810 30168		223
WABCO	0810 30169		224
WABCO	0810 30170		224
WABCO	0810 30171		225
WABCO	0810 30172		226
WABCO	0810 30173		226
WABCO	0810 30174		227
WABCO	0810 30175		228
WABCO	0810 30176		229
WABCO	0810 30177		232
WABCO	0810 30178		233
WABCO	0810 30179		234
WABCO	0810 30180	12999677VT - 5021170487 - 0865965	237
WABCO	0810 30181		238
WABCO	0810 30182		242
WABCO	0810 30183		244
WABCO	0810 30184		251
WABCO	0810 30185		251
WABCO	0810 30186		275
WABCO	0810 30187		275
WABCO	0810 30188		275
WABCO	0810 30189		275
WABCO	0810 30190	3080003320 - 3080001901 - 40195017 - 40195001	276
WABCO	0810 30191	40195018 - 40195002 - 3080003220 - 3080001801	276
WABCO	0810 30193		247
WABCO	0810 30194		247
WABCO	0810 30196	81.50822-6038 - 640 322 926 2	258
WABCO	0810 30197		252
WABCO	0810 30198		253
WABCO	0810 30199		253
WABCO	0810 30200		254
WABCO	0810 30201		254
WABCO	0810 30202	81.50822-6039 - 640 322 927 2	259
WABCO	0810 30203		260
WABCO	0810 30204		260
WABCO	0810 30205	WVA 29279	261
WABCO	0810 30206		254
WABCO	0810 30207	81508046576 - 81508046580 - 6403220050 - 6403220080	261
WABCO	0810 30208	WVA 29162	276
WABCO	0810 30209	WVA 29126 - 29159	277
WABCO	0810 30210	WVA 29088 - 12999782	277
WABCO	0810 30211	6403229352	261
WABCO	0810 30212	6403229352	261
WABCO	0810 30213	897 290 261 2	259
WABCO	0810 30214	81.50822-6040 - 640 322 928 2	260
WABCO	0810 30215	6403220040 - 6403220070 - 81508046577 - 81508046581	262
WABCO	0810 30216		282
WABCO	0810 30217		283
WABCO	0810 30218		282
WABCO	0810 30219		283
WABCO	0810 30220		282
WABCO	0810 30221		283
WABCO	0810 30222	81.50822 - 6042 - 640 322 932 2	248
WABCO	0810 30226		284
WABCO	0810 30227		284
WABCO	0810 30229		284
WABCO	0810 30230		284
WABCO	0810 30231		252
WABCO	0810 30232		252
WABCO	0810 30233		253
WABCO	0810 30234		255

www.andacotomotiv.com

CROSS REFERENCE LIST

GROUP	ANDTECH NO	CROSS REFERENCE	PAGE
WABCO	0810 30235		257
WABCO	0810 30236		257

www.andacotomotiv.com

All original numbers, marks and models from vehicle manufacturers listed in this catalogue are for comparison purposes only, and may not be used in invoices.

CROSS REFERENCE LIST

GROUP	ANDTECH NO	CROSS REFERENCE	PAGE

www.andacotomotiv.com

All original numbers, marks and models from vehicle manufacturers listed in this catalogue are for comparison purposes only, and may not be used in invoices.

CROSS REFERENCE LIST

GROUP	ANDTECH NO	CROSS REFERENCE	PAGE

www.andacotomotiv.com

All original numbers, marks and models from vehicle manufacturers listed in this catalogue are for comparison purposes only, and may not be used in invoices.

CROSS REFERENCE LIST

GROUP	ANDTECH NO	CROSS REFERENCE	PAGE

www.andacotomotiv.com

All original numbers, marks and models from vehicle manufacturers listed in this catalogue are for comparison purposes only, and may not be used in invoices.

Notes

www.andacotomotiv.com

Notes

www.andacotomotiv.com

Notes

www.andacotomotiv.com

Notes

www.andacotomotiv.com

Notes

www.andacotomotiv.com

ANDAÇ OTOMOTİV SAN. TİC. LTD. ŞTİ.
5. Sanayi Sitesi 7419/6 Sokak No:50 35060 Pınarbaşı - İzmir / TURKEY
Phone: + 90 232 478 01 01 + 90 232 478 04 14
Fax: + 90 232 479 77 84

Web | www.andacotomotiv.com
E-mail | info@andacotomotiv.com
export@andacotomotiv.com